Foxfab
POWER SOLUTIONS

# PRODUCTION RELEASE FORM

## GENERAL INFORMATION

| | |
|---|---|
| Job No.: | J15994 |
| Model No: | FFCC-C3-1200LSI-1200LSI-V3-ALU-LA-GENAP1-AE+MAE-SH24-4P |
| Catalog No: | FFCC-C3-1200LSI-1200LSI-U3-GL-ALU-LA-GENAP1-AE- |
| Date: | 2/5/2026 |
| Job Name: | Skiatook Public Safety Facility |

## ELECTRICAL RATING INFORMATION

| | |
|---|---|
| Voltage: | 208Y/120 VAC |
| Current: | 1200A RMS |
| PH/W/Hz: | 3PH/4W/60Hz |
| SCCR: | 65kA RMS SYM. |

## SPECIFICATION/APPROVAL INFORMATION

| | |
|---|---|
| ETL/CUL/UL SPEC: | ETL 1008 |
| E File #: | 4011005(ETL) |
| Drawing No: | FFCC-C3-1200LSI-1200LSI-U3-GL-ALU-LA-GENA |
| Drawn By: | BB |
| Approved By: | BB |
| File Compliance Mech: | GC |
| File Compliance Elec: | KB |

## DETAILED REQUIREMENTS

**Camlock Configuration**

| | |
|---|---|
| M/F | M&F |
| Colours | U3 - BK/RD/BU/WH/GN |
| Qty (PH) | 3 |
| Qty (GND) | 1 |
| Lug Config | LA |

**Enclosure Information**

| | |
|---|---|
| Size | 68 x 48 x 24 |
| Material | 5052 Aluminum |
| Rating | Type 3R |
| Colour | ASA 61 GREY |
| Qty | 1 |

## OPTIONAL ACCESSORIES

| | | | Specification |
|---|---|---|---|
| (AA) | X | Camlock Snap Covers | |
| (AC) | X | Heater with stat | 250W |
| (AD) | X | Additional Outlets (Specify if GFCI) | QTY:1 20A GFCI Receptacle, QTY: 1 30A L5-30R Twist-Locking Receptacle |
| (AE) | X | Key Interlock | Kirk Key Installed on CB2 |
| (AF) | X | Terminal Strip | |
| (AG) | X | Phase Sequence Relay | |
| (AH) | | Power Meter | |
| (AI) | | Micro-Switch | |
| (AJ) | | Leg Stand Kit | |
| | | Tranformer required? | N/A |

## EQUIPMENT SPECIFICATION

| | | | |
|---|---|---|---|
| FFCC-X2 (T) | | Transfer switch | |
| FFCC-X2 (D) | | Disconnect Switch | |
| FFCC-X3 | X | Breaker(s) | CB1=3P-1200A Ekip Dip LSI Trip Breaker, CB2=4P-1200A Ekip Dip LSI Trip Breaker |
| | | Other | CB1 and CB2 c/w: Auxiliaries |

## NOTES & COMMENTS

**No Neutral Load Bank Camlocks**

**2WSDS – Two Wire Start Contacts c/w Source Destination Switch**

**SH24 – 24VDC Shunt Trip Installed on CB1**

**MAE- Matching Kirk Key Installed on Up-stream Breaker (Shipped Loose)**

PRIME GENERATOR SOURCE
INPUT LUGS
4C-#4AWG~600MCM/PHASE
+ 4C #1/0AWG GROUND LUGS

RETURN POWER SOURCE
OUTPUT LUGS
4C-#4AWG~600MCM/PHASE
+ 4C #1/0AWG GROUND LUGS

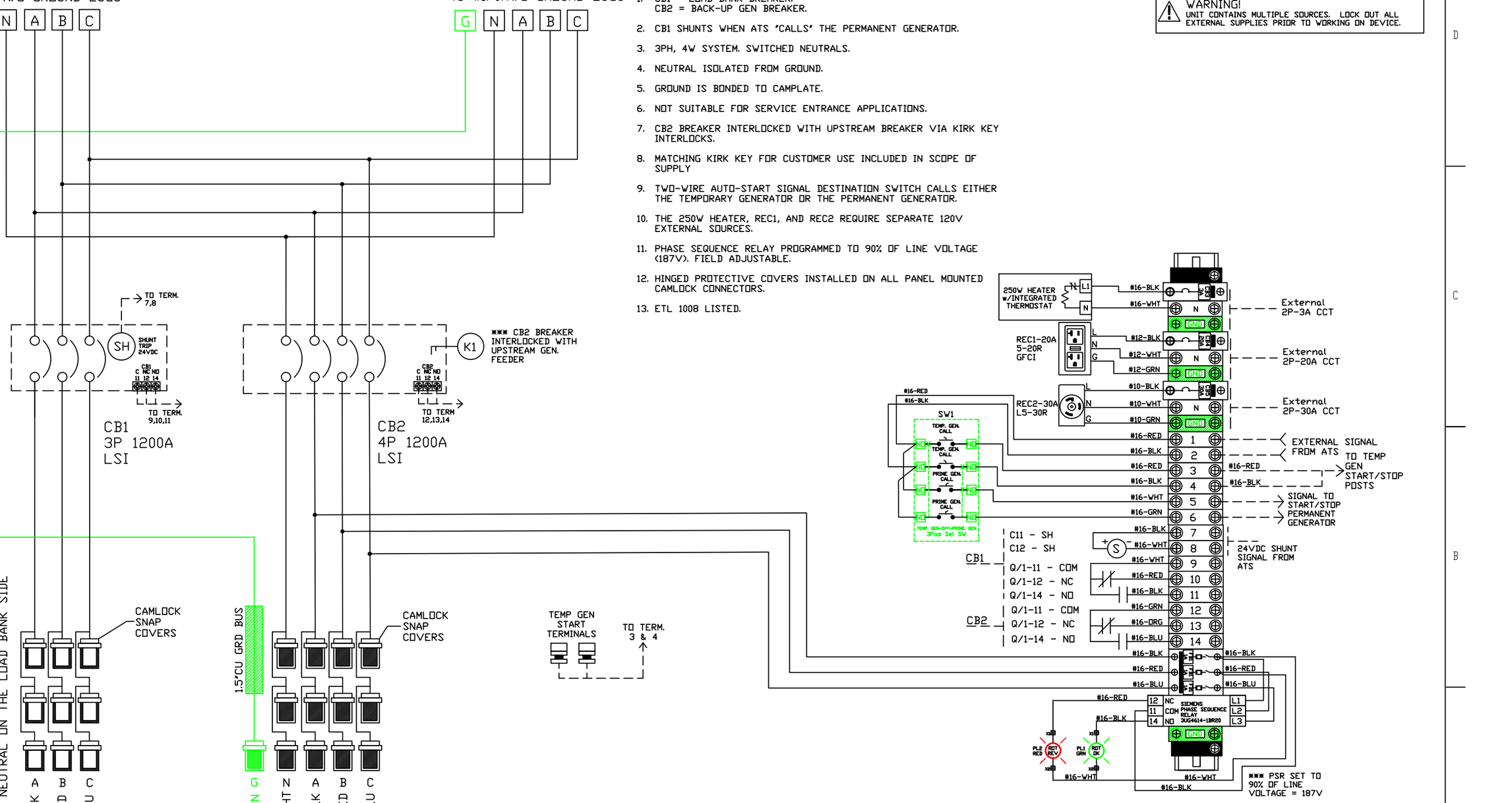


LOAD BANK CONNECTION
3 FEMALE CAMLOCKS/PHASE+
1 FEMALE CAMLOCK/GROUND

EMERGENCY/TEMPORARY POWER INPUT
3 MALE CAMLOCKS/PHASE+
1 MALE CAMLOCK/GROUND

NOTES

1. CB1 = LOAD BANK BREAKER.
   CB2 = BACK-UP GEN BREAKER.
2. CB1 SHUNTS WHEN ATS 'CALLS' THE PERMANENT GENERATOR.
3. 3PH, 4W SYSTEM. SWITCHED NEUTRALS.
4. NEUTRAL ISOLATED FROM GROUND.
5. GROUND IS BONDED TO CAMPLATE.
6. NOT SUITABLE FOR SERVICE ENTRANCE APPLICATIONS.
7. CB2 BREAKER INTERLOCKED WITH UPSTREAM BREAKER VIA KIRK KEY INTERLOCKS.
8. MATCHING KIRK KEY FOR CUSTOMER USE INCLUDED IN SCOPE OF SUPPLY
9. TWO-WIRE AUTO-START SIGNAL DESTINATION SWITCH CALLS EITHER THE TEMPORARY GENERATOR OR THE PERMANENT GENERATOR.
10. THE 250W HEATER, REC1, AND REC2 REQUIRE SEPARATE 120V EXTERNAL SOURCES.
11. PHASE SEQUENCE RELAY PROGRAMMED TO 90% OF LINE VOLTAGE (187V). FIELD ADJUSTABLE.
12. HINGED PROTECTIVE COVERS INSTALLED ON ALL PANEL MOUNTED CAMLOCK CONNECTORS.
13. ETL 1008 LISTED.

CAUTION!
INSTALLER TO CONFIRM PROPER KEY COORDINATION OF INTERLOCKS. ALL SPARE KEYS TO BE DESTROYED.

WARNING!
UNIT CONTAINS MULTIPLE SOURCES. LOCK OUT ALL EXTERNAL SUPPLIES PRIOR TO WORKING ON DEVICE.

| ELECTRICAL SPECIFICATIONS | |
|---|---|
| SUPPLY VOLTAGE | 208Y/120V |
| SUPPLY CURRENT | 1200A |
| PHASE/FREQ. | 3Ø, 4W, 60Hz |
| ASSEMBLY SCCR | 65kA RMS SYM. |
| ENCL. RATING | TYPE 3R |
| CERTIFICATIONS | ETL 1008 |

PROPRIETARY AND CONFIDENTIAL
THE INFORMATION CONTAINED IN THIS DRAWING IS THE SOLE PROPERTY OF FOXFAB METAL WORKS ANY REPRODUCTION IN PART OR AS A WHOLE WITHOUT THE WRITTEN PERMISSION OF FOXFAB METAL WORKS IS PROHIBITED.

DRAWN BY DA
CREATED ON 9/11/2025
UNLESS OTHERWISE SPECIFIED:
DIMENSIONS ARE IN INCHES
TOLERANCES:
X ± 1 XX ± .5
X.XX ± .1 X.XXX ± .1
ANGULAR ±1.5
INTERPRET DIM AND TOL. PER: ASME Y14.5
THIRD ANGLE:

FOXFAB POWER SOLUTIONS
1579 - 188 ST. SURREY, B.C. V3Z 1A1
TEL: 604-460-9310 FAX: 604-460-9317
WWW.FOXFAB.COM

TITLE:
J15994 - SKIATOOK PUBLIC SAFETY FACILITY
FFCC-C3-1200LSI-1200LSI-U3-GL-ALU-GENAP1-AE+MAE-SH24-4P

SIZE B | SCALE NTS | SHEET 1 OF 2 | REV 1.3

# BILL OF MATERIAL

| REF. | MFR | P/N | DESCRIPTION | QTY | REV |
|---|---|---|---|---|---|
| CB1 | ABB | XT7SU312EFFF000XXX | C.BREAKER TMAX T7S 1200 UL/CSA FIXED THREE-POLE WITH FRONT TERMINALS AND LEVER OPERATING MECHANISM AND SOLID-STATE RELEASE IN AC EKIP DIP LSI | 1 | A |
| | | ZEASA | 24VDC SHUNT TRIP ON CB1 | 1 | A |
| CB2 | ABB | XT7SU412EFFF000XXX | C.BREAKER TMAX T7S 1200 UL/CSA FIXED FOUR-POLE WITH FRONT TERMINALS AND LEVER OPERATING MECHANISM AND SOLID-STATE RELEASE IN AC EKIP DIP LSI | 1 | A |
| CB1-2 | ABB | ZE1AUX4 | HIGH POWER SIGNAL AUX CONTACTS (FORM-C) | 2 | A |
| CB3 | SIEMENS | 5SJ4103-7HG40 | 1P. 3A, 120V, RAIL MOUNTED BREAKER, UL489 LISTED | 1 | A |
| CB4 | SIEMENS | 5SJ4120-7HG40 | 1P. 20A, 120V, RAIL MOUNTED BREAKER, UL489 | 1 | A |
| CB5 | SIEMENS | 5SJ4130-7HG40 | 1P. 30A, 120V, RAIL MOUNTED BREAKER, UL489 | 1 | A |
| REC1 | LEVITON | GFNT2-W | 20A 5-20R GFI DUPLEX RECEPTACLE | 1 | A |
| REC2 | LEVITON | 2610 | 30A L5-30R RECEPTACLE | 1 | A |
| HEAT1 | STEGO | 028219-06 | 250W, HEATER & BLOWER, INCLUDES FIXED 5DEG C THERMOSTAT | 1 | A |
| PSR1 | SIEMENS | 3UG4614-1BR20 | PHASE SEQUENCE RELAY, 160~690V, PROGRAMMABLE | 1 | A |
| FB1 | MERSEN | USCC3 + 3x ATQR1 | 3P FUSE HOLDER, CC TYPE + 3 X 1A FUSES | 1 | A |
| PL1 | SIEMENS | 3SU1051-6AA40-0AA0, 3SU1401-1BH40-1AA0, 3SU1550-0AA10-0AA0 | 22mm GREEN PILOT LIGHT, LED, & HOLDER | 1 | A |
| PL2 | SIEMENS | 3SU1051-6AA20-0AA0, 3SU1401-1BH20-1AA0, 3SU1550-0AA10-0AA0 | 22mm RED PILOT LIGHT, LED, & HOLDER | 1 | A |
| SW1 | SIEMENS | 3SU1052-2BL60-0AA0 | 3-POSITION SELECTOR SWITCH | 1 | A |
| | | 3SU1400-1AA10-1BA0 | NORMALLY OPEN CONTACT | 4 | A |
| | | 3SU1550-0AA10-0AA0 | SELECTOR SWITCH HOLDER | 1 | A |
| POST | CIRC-TEST | 375-591-10 | TERMINAL POSTS (BANANA PLUGS AND/OR WIRE POST) | 2 | A |
| K1 | KIRK-KEY | KUL007510-H-- | KIRK KEY INTERLOCK TYPE U FOR MOLDED CASE BREAKER | 1 | A |
| K1-MAE | KIRK-KEY | KFL007510-H-- | KIRK KEY INTERLOCK FOR UPSTREAM BREAKER (MATCHED TUMBLER SET). MUST BE KEYED THE SAME. SHIPPED LOOSE. | 1 | A |
| SNAP COVERS | MARINCO PP | CLL3RN-Z | CLEAR, HINGED CAMLOCK SNAP COVERS | 23 | A |

PROPRIETARY AND CONFIDENTIAL

THE INFORMATION CONTAINED IN THIS DRAWING IS THE SOLE PROPERTY OF FOXFAB METAL WORKS ANY REPRODUCTION IN PART OR AS A WHOLE WITHOUT THE WRITTEN PERMISSION OF FOXFAB METAL WORKS IS PROHIBITED.

DRAWN BY DA
CREATED ON 9/11/2025

UNLESS OTHERWISE SPECIFIED:
DIMENSIONS ARE IN INCHES
TOLERANCES:
X ±1 XX ±.5
X.XX ±.1 XXX ±.1
ANGULAR ±1.5
INTERPRET DIM AND TOL. PER: ASME Y14.5

THIRD ANGLE:

FOXFAB POWER SOLUTIONS
1579 - 188 ST. SURREY, B.C. V3Z 1A1
TEL: 604-460-9310 FAX: 604-460-9317
WWW.FOXFAB.COM

TITLE:
J15994 - SKIATOOK PUBLIC SAFETY FACILITY
BILL OF MATERIAL

SIZE B | SCALE NTS | SHEET 2 OF 2 | REV 1.3