Foxfab
POWER SOLUTIONS

PRODUCTION RELEASE FORM

GENERAL INFORMATION

Job No.:	J16455
Model No:	FFCC-P2-1200-LSI100-V4-ALU-LA-1200LSI100-100LSI100-GENAP1-ERMS-AE-MAE-LZ
Catalog No:	FFCC-P2-1200-LSI100-U4-G-ALU-LA-1200LSI100-100LS
Date:	2/13/2026
Job Name:	Pinellas Park Public Safety PD

ELECTRICAL RATING INFORMATION

Voltage:	480Y/277 VAC
Current:	1200A RMS
PH/W/Hz:	3PH/4W/60Hz
SCCR:	50kA RMS SYM.

SPECIFICATION/APPROVAL INFORMATION

ETL/CUL/UL SPEC:	ETL 1008
E File #:	4011005(ETL)
Drawing No:	FFCC-P2-1200-LSI100-U4-G-ALU-LA-1200LSI100
Drawn By:	BB
Approved By:	BB
File Compliance Mech:	GC
File Compliance Elec:	KB

DETAILED REQUIREMENTS

Camlock Configuration

M/F	M
Colours	U4 - BN/OR/YL/WH/GN
Qty (PH)	3
Qty (GND)	1
Lug Config	LA

Enclosure Information

Size	78 x 45 x 38
Material	5052 Aluminum
Rating	Type 3R
Colour	ASA 61 GREY
Qty	1

OPTIONAL ACCESSORIES

			Specification
(AA)	X	Camlock Snap Covers	
(AC)	X	Heater with stat	2x 250W
(AD)	X	Additional Outlets (Specify if GFCI)	QTY: 1 20A GFCI Receptacle, QTY: 1 30A L5-30R Twist-Locking Receptacle
(AE)	X	Key Interlock	AE- Kirk Key (K1) Installed on CB1
(AF)	X	Terminal Strip	
(AG)	X	Phase Sequence Relay	
(AH)		Power Meter	
(AI)		Micro-Switch	
(AJ)		Leg Stand Kit	
	X	Tranformer required?	SP50ACP

EQUIPMENT SPECIFICATION

FFCC-X2 (T)		Transfer switch	
FFCC-X2 (D)		Disconnect Switch	
FFCC-X3	X	Breaker(s)	CB1&CB2 = 3P-1200A ABB Ekip Touch LSI Trip Breakers c/w: ERMS & Auxiliaries
		Other	CB3 = 3P-100A ABB Ekip Dip LSI Trip Breaker c/w: Auxiliaries

NOTES & COMMENTS

MAE- Matching Kirk Key (K2) Installed on Up-stream Breaker Shipped Loose

LZ- Pass Through Lugs

2WSDS- 2 Wire Source Destination Switch

CB2 and CB3 are output distribution breakers, only CB3 is located in a separately barriered compartment (must be padlockable)

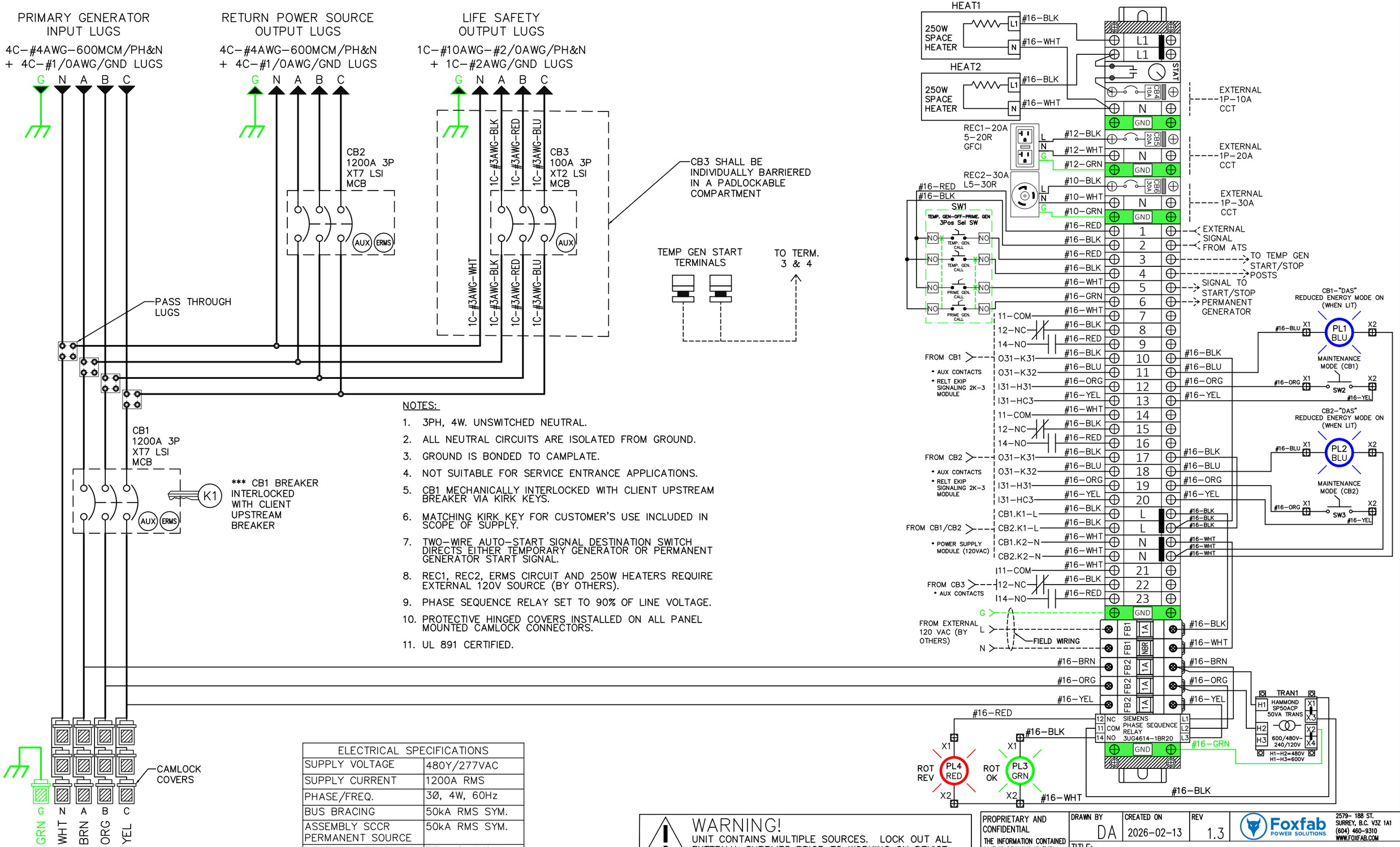

NOTES:

1. 3PH, 4W. UNSWITCHED NEUTRAL.
2. ALL NEUTRAL CIRCUITS ARE ISOLATED FROM GROUND.
3. GROUND IS BONDED TO CAMPLATE.
4. NOT SUITABLE FOR SERVICE ENTRANCE APPLICATIONS.
5. CB1 MECHANICALLY INTERLOCKED WITH CLIENT UPSTREAM BREAKER VIA KIRK KEYS.
6. MATCHING KIRK KEY FOR CUSTOMER'S USE INCLUDED IN SCOPE OF SUPPLY.
7. TWO–WIRE AUTO–START SIGNAL DESTINATION SWITCH DIRECTS EITHER TEMPORARY GENERATOR OR PERMANENT GENERATOR START SIGNAL.
8. REC1, REC2, ERMS CIRCUIT AND 250W HEATERS REQUIRE EXTERNAL 120V SOURCE (BY OTHERS).
9. PHASE SEQUENCE RELAY SET TO 90% OF LINE VOLTAGE.
10. PROTECTIVE HINGED COVERS INSTALLED ON ALL PANEL MOUNTED CAMLOCK CONNECTORS.
11. UL 891 CERTIFIED.

ELECTRICAL SPECIFICATIONS	
SUPPLY VOLTAGE	480Y/277VAC
SUPPLY CURRENT	1200A RMS
PHASE/FREQ.	3Ø, 4W, 60Hz
BUS BRACING	50kA RMS SYM.
ASSEMBLY SCCR PERMANENT SOURCE	50kA RMS SYM.
ASSEMBLY SCCR TEMP SOURCE	35kA RMS SYM.
ENCL. RATING	TYPE 3R
CERTIFICATIONS	UL 891

WARNING!
UNIT CONTAINS MULTIPLE SOURCES. LOCK OUT ALL EXTERNAL SUPPLIES PRIOR TO WORKING ON DEVICE.

CAUTION!
INSTALLER TO CONFIRM PROPER KEY COORDINATION OF INTERLOCKS. ALL SPARE KEYS TO BE DESTROYED.

PROPRIETARY AND CONFIDENTIAL
THE INFORMATION CONTAINED IN THIS DRAWING IS THE SOLE PROPERTY OF FOXFAB POWER SOLUTIONS. ANY REPRODUCTION IN PART OR AS A WHOLE WITHOUT THE WRITTEN PERMISSION OF FOX FAB POWER SOLUTIONS IS PROHIBITED.

DRAWN BY	CREATED ON	REV
DA	2026–02–13	1.3

Foxfab POWER SOLUTIONS
2579– 188 ST.
SURREY, B.C. V3Z 1A1
(604) 460–9310
WWW.FOXFAB.COM

TITLE: J16455 – Pinellas Park Public Safety PD

P/N: FFCC–P2–1200–LSI100–U4–G–ALU–LA–1200LSI100–100LSI100–GENAP1–AE–MAE–LZ

SHEET 1 OF 2

BILL OF MATERIAL

REF.	MFG.	P/N	DESCRIPTION	QTY.
CB1/CB2	ABB	XT7SQ312EPFF000XXX	TMAX XT7S 1200A, 3P, LSI TOUCH, 50kA@480Vac, 100% RATED, UL/CSA FIXED, FRONT TERMINALS AND SOLID-STATE RELEASE IN AC	2
		ZE1AUX4	AUXILIARY CONTACT BLOCK	2
		ZEAPWRS	EKIP SUPPLY 110-240V AC/DC	2
		ZEB2K3	RELT-EKIP 2K-3 MODULE	2
CB3	ABB	XT2NQ31001FF000XXX	TMAX XT2N 125A, 3P, LSI DIP, 65kA@208Vac, 100% RATED, UL/CSA FIXED, FRONT TERMINALS AND SOLID-STATE RELEASE IN AC. (TRIP SET AT 100A)	1
	ABB	KXTAAUX	AUXILIARY CONTACT BLOCK	1
CB3-LUGS	ABB	KXT2CUAL2-3PC	FC CUAL TERMINALS FOR CUAL CABLES 10-2/0 AWG	2
K1	KIRK KEY	KUL007510-H--	KIRK KEY INTERLOCK TYPE U FOR MOLDED CASE BREAKER (INSTALLED ON CB1)	1
K2-MAE	KIRK KEY	KFL007510-H--	KIRK KEY INTERLOCK FOR CLIENT UPSTREAM BREAKER COVER (MATCHED TUMBLER SET). MUST BE KEYED THE SAME. SHIPPED LOOSE	1
CB4	SIEMENS	5SJ4110-7HG40	1P. 10A, 120V, RAIL MOUNTED BREAKER, UL489	1
CB5	SIEMENS	5SJ4120-7HG40	1P. 20A, 120V, RAIL MOUNTED BREAKER, UL489	1
CB6	SIEMENS	5SJ4130-7HG40	1P. 30A, 120V, RAIL MOUNTED BREAKER, UL489	1
STAT	FINDER	7T.81.0.000.2303	PANEL THERMOSTAT, HEATING CONTROL, NO, 0~60°C	1
HEAT1/HEAT2	HEATREX	HX-565004	250W, 120V, SPACE HEATER	2
REC1	LEVITON	GFNT2-W	20A 5-20R GFCI DUPLEX RECEPTACLE	1
REC2	LEVITON	2610	30A L5-30R RECEPTACLE	1
POST	CIRC-TEST	375-591-10	TERMINAL POSTS (BANANA PLUGS AND/OR WIRE POST)	2
SW1	SIEMENS	3SU1052-2BL60-0AA0	3-POSITION SELECTOR SWITCH	1
		3SU1400-1AA10-1BA0	NORMALLY OPEN CONTACT	4
		3SU1550-0AA10-0AA0	SELECTOR SWITCH HOLDER	1
PL1/PL2	SIEMENS	3SU1051-6AA50-0AA0, 3SU1401-1BH50-1AA0, 3SU1550-0AA10-0AA0	22mm BLUE PILOT LIGHT, LED, & HOLDER	2
SW2/SW3	SIEMENS	3SU1050-4BF11-0AA0	2-POSITION KEYED SELECTOR SWITCH	2
		3SU1400-1AA10-1CA0	NORMALLY OPEN CONTACT	2
		3SU1550-0AA10-0AA0	22MM HOLDER	2
FB1	MERSEN	USCC2	2P FUSE HOLDER, CC TYPE (1A FUSE ON L) (DUMMY ON N)	1
FB2	MERSEN	USCC3	3P FUSE HOLDER, CC TYPE (3 X 1A FUSE)	1
FUSE	MERSEN	ATQR1	FUSE ATQR - CLASS CC - TIME-DELAY 600VAC 300VDC 1A FERRULE AMP-TRAP 2000®	4
DUMMY FUSE	EATON	NNB-R	EATON BUSSMANN SERIES MNB DUMMY FUSE NEUTRAL, CLASS CC, NON INDICATING	1
PSR1	SIEMENS	3UG4614-1BR20	PHASE SEQUENCE RELAY, 160~690V, PROGRAMMABLE	1
TRAN1	HAMMOND	SP50ACP	50VA, 600/480V - 240/120V CONTROL TRANSFORMER	1
PL3	SIEMENS	3SU1051-6AA40-0AA0, 3SU1401-1BH40-1AA0, 3SU1550-0AA10-0AA0	22mm GREEN PILOT LIGHT, LED, & HOLDER	1
PL4	SIEMENS	3SU1051-6AA20-0AA0, 3SU1401-1BH20-1AA0, 3SU1550-0AA10-0AA0	22mm RED PILOT LIGHT, LED, & HOLDER	1
SNAP COVERS	MARINCO PP	CLL3RN-Z	CLEAR, HINGED CAMLOCK SNAP COVERS	13

PROPRIETARY AND CONFIDENTIAL
THE INFORMATION CONTAINED IN THIS DRAWING IS THE SOLE PROPERTY OF FOXFAB POWER SOLUTIONS. ANY REPRODUCTION IN PART OR AS A WHOLE WITHOUT THE WRITTEN PERMISSION OF FOX FAB POWER SOLUTIONS IS PROHIBITED.

DRAWN BY	CREATED ON	REV
DA	2026-02-13	1.3

Foxfab POWER SOLUTIONS
2579- 188 ST.
SURREY, B.C. V3Z 1A1
(604) 460-9310
WWW.FOXFAB.COM

TITLE: BILL OF MATERIAL

P/N: FFCC-P2-1200-LSI100-U4-G-ALU-LA-1200LSI100 -100LSI100-GENAP1-AE-MAE-LZ

SHEET 2 OF 2