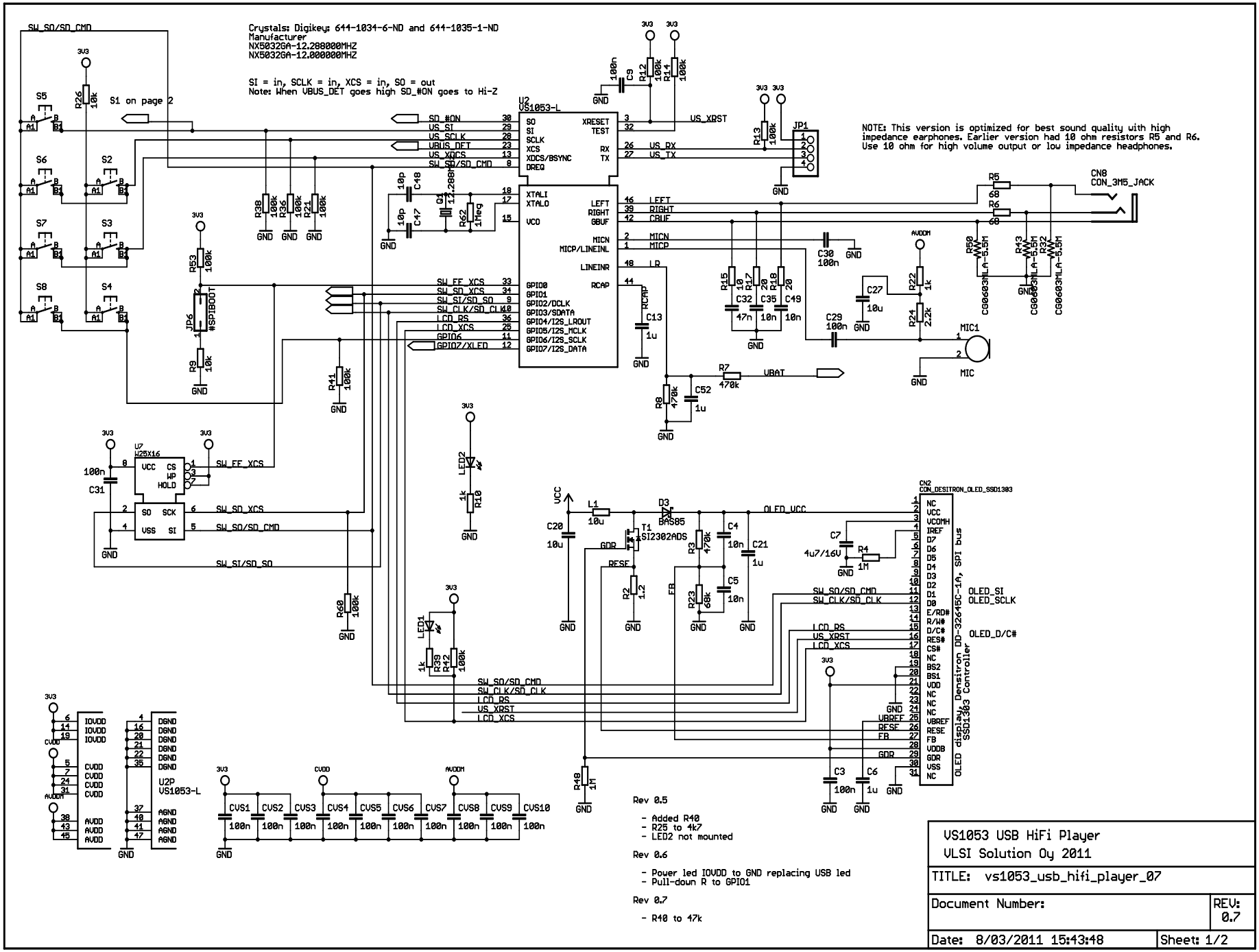
Crystals: Digikey: 644-1034-6-ND and 644-1035-1-ND
Manufacturer
NX5032GA-12.288000MHZ
NX5032GA-12.000000MHZ
SI = in, SCLK = in, XCS = in, SO = out
Note: When VBUS_DET goes high SD_#ON goes to Hi-Z
S1 on page 2
U2
VS1053-L
NOTE: This version is optimized for best sound quality with high impedance earphones. Earlier version had 10 ohm resistors R5 and R6. Use 10 ohm for high volume output or low impedance headphones.
CN8
CON_3M5_JACK
MIC1
MIC
U7
W25X16
CN2
CON_DESITRON_OLED_SSD1303
OLED display, Densitron DD-32645C-1A, SPI bus
SSD1303 Controller
OLED_SI
OLED_SCLK
OLED_D/C#
U2P
VS1053-L
Rev 0.5
- Added R40
- R25 to 4k7
- LED2 not mounted
Rev 0.6
- Power led IOVDD to GND replacing USB led
- Pull-down R to GPIO1
Rev 0.7
- R40 to 47k
VS1053 USB HiFi Player
VLSI Solution Oy 2011
TITLE: vs1053_usb_hifi_player_07
Document Number:
REV: 0.7
Date: 8/03/2011 15:43:48
Sheet: 1/2

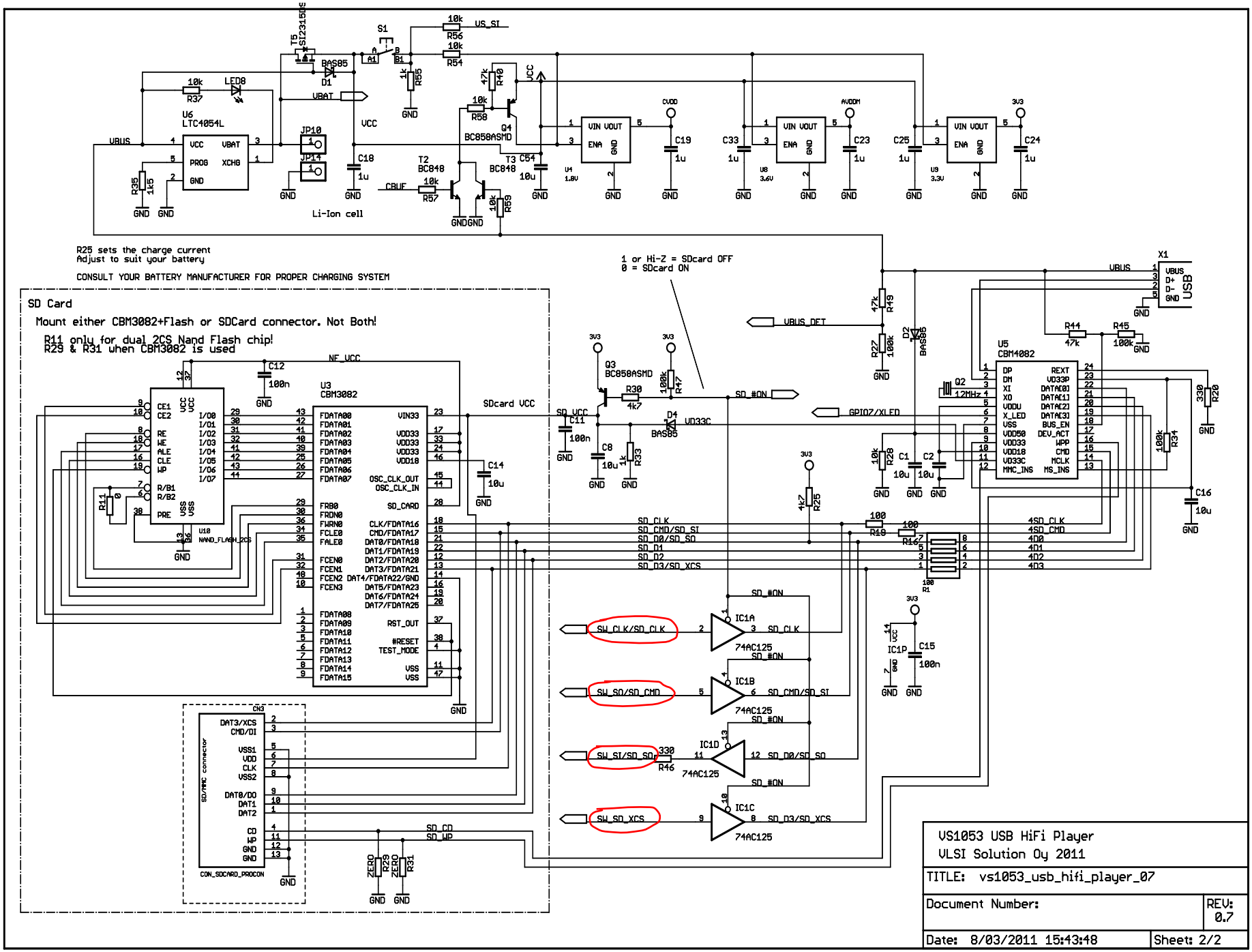
R25 sets the charge current
Adjust to suit your battery
CONSULT YOUR BATTERY MANUFACTURER FOR PROPER CHARGING SYSTEM
1 or Hi-Z = SDcard OFF
0 = SDcard ON
SD Card
Mount either CBM3082+Flash or SDCard connector. Not Both!
R11 only for dual 2CS Nand Flash chip!
R29 & R31 when CBM3082 is used
U6
LTC4054L
Li-Ion cell
U3
CBM3082
U5
CBM4082
U10
NAND_FLASH_2CS
CON_SDCARD_PROCON
SD/MMC connector
74AC125
VS1053 USB HiFi Player
VLSI Solution Oy 2011
TITLE: vs1053_usb_hifi_player_07
Document Number:
REV: 0.7
Date: 8/03/2011 15:43:48
Sheet: 2/2