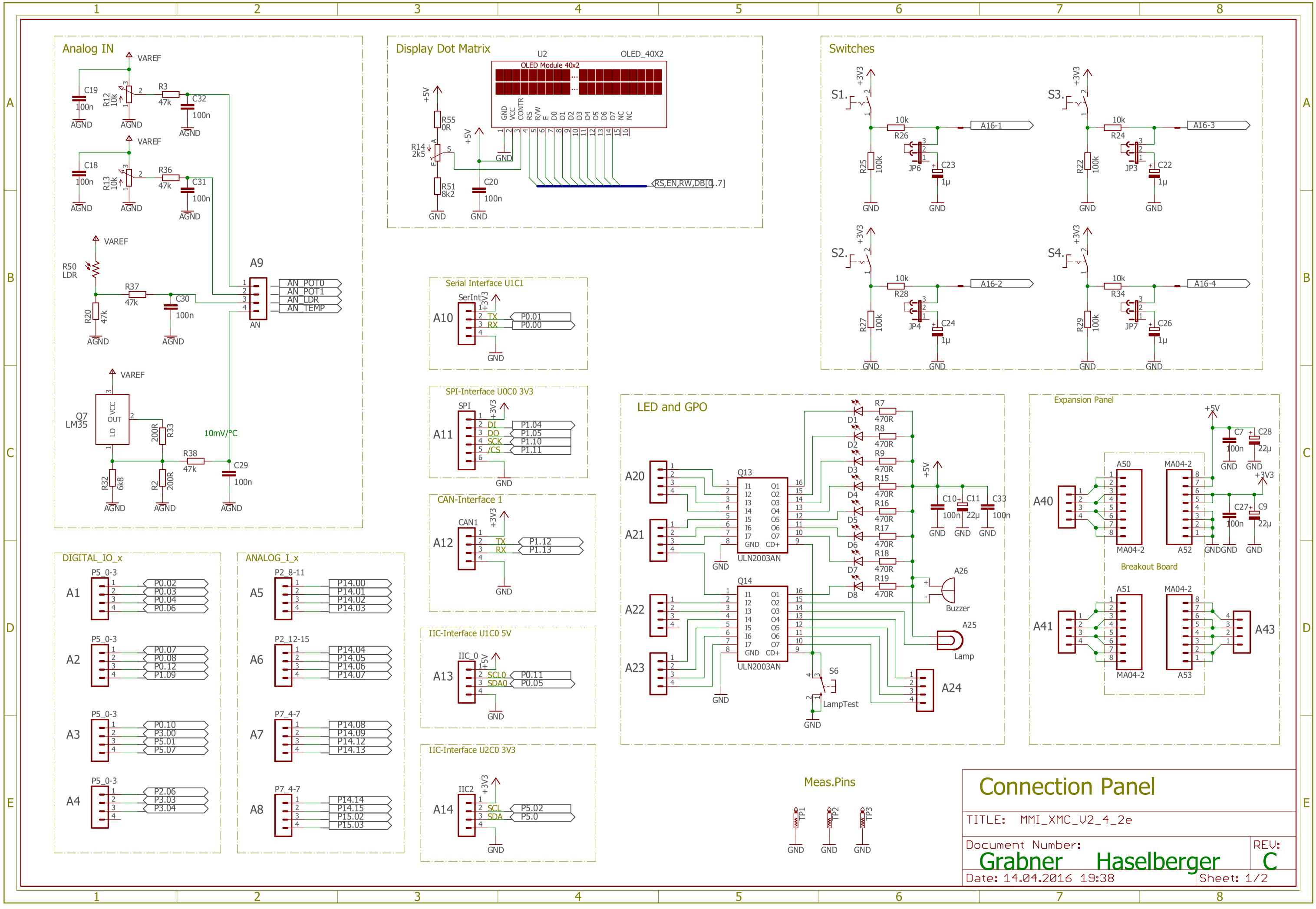
Analog IN
VAREF
C19 100n
R12 10k
R3 47k
C32 100n
AGND
C18 100n
R13 10k
R36 47k
C31 100n
R50 LDR
R37 47k
C30 100n
R20 47k
A9
AN_POT0
AN_POT1
AN_LDR
AN_TEMP
AN
Q7 LM35
VCC
OUT
LO
200R R33
R38 47k
C29 100n
10mV/°C
R32 6k8
R2 200R
Display Dot Matrix
U2
OLED_40X2
OLED Module 40x2
GND VCC CONTR RS R/W E D0 D1 D2 D3 D4 D5 D6 D7 NC NC
+5V
R55 0R
R14 2k5
R51 8k2
C20 100n
RS,EN,RW,DB[0..7]
Switches
S1.
S2.
S3.
S4.
+3V3
10k
R26
R28
R24
R34
R25 100k
R27 100k
R22 100k
R29 100k
JP6
JP4
JP3
JP7
C23 1µ
C24 1µ
C22 1µ
C26 1µ
A16-1
A16-2
A16-3
A16-4
Serial Interface U1C1
A10
SerInt
TX
RX
P0.01
P0.00
SPI-Interface U0C0 3V3
A11
SPI
DI
DO
SCK
/CS
P1.04
P1.05
P1.10
P1.11
CAN-Interface 1
A12
CAN1
TX
RX
P1.12
P1.13
IIC-Interface U1C0 5V
A13
IIC_0
SCL0
SDA0
P0.11
P0.05
IIC-Interface U2C0 3V3
A14
IIC2
SCL
SDA
P5.02
P5.0
LED and GPO
A20
A21
A22
A23
Q13
Q14
ULN2003AN
R7 470R
R8 470R
R9 470R
R15 470R
R16 470R
R17 470R
R18 470R
R19 470R
C10 100n
C11 22µ
C33 100n
A26
Buzzer
A25
Lamp
A24
S6
LampTest
Expansion Panel
A40
A41
A50
A51
A52
A53
MA04-2
Breakout Board
A43
C7 100n
C28 22µ
C27 100n
C9 22µ
DIGITAL_IO_x
A1
A2
A3
A4
P5_0-3
P0.02
P0.03
P0.04
P0.06
P0.07
P0.08
P0.12
P1.09
P0.10
P3.00
P5.01
P5.07
P2.06
P3.03
P3.04
ANALOG_I_x
A5
A6
A7
A8
P2_8-11
P2_12-15
P7_4-7
P14.00
P14.01
P14.02
P14.03
P14.04
P14.05
P14.06
P14.07
P14.08
P14.09
P14.12
P14.13
P14.14
P14.15
P15.02
P15.03
Meas.Pins
TP1
TP2
TP3
Connection Panel
TITLE: MMI_XMC_V2_4_2e
Document Number:
Grabner Haselberger
REV: C
Date: 14.04.2016 19:38
Sheet: 1/2