Drawing
PLTS On- Grid
MARTABE PHASE 2
HIGH LAND - WPP
35.6 kWp

CLIENT :

AGINCOURT RESOURCES
MEMBER OF ASTRA

CONTRACTOR :

ENERGIA PRIMA NUSANTARA
member of ASTRA

PROJECT NAME :

PLTS
MARTABE

PROJECT LOCATION :

HIGH LAND - WPP

DRAWING TITLE :

COVER

DIDESIGN :	REKASURYA	NOVANDY
DIPERIKSA :	EPN	
DISETUJUI :	OWNER	

DATE	REVISI
20 JANUARI 2023	REV.01

DRAWING NUMBER

SPE22013-B-
01-CV

DRAWING LIST

NO	DOCUMENT NAME	DRAWING NUMBER
1	COVER	SPE22047 - 8 - 01 - CV
2	DRAWING LIST	SPE22047 - 8 - 02 - DL
3	SINGLE LINE DIAGRAM	SPE22047 - 8 - 03 - SLD
4	AC DISTRIBUTION BOX	SPE22047 - 8 - 04 - ACDB
5	INTERCONNECTION BOX	SPE22047 - 8 - 05 - ICB
6	MONITORING BOX	SPE22047 - 8 - 06 - MB
7	COMMUNICATION & MONITORING SYSTEM	SPE22047 - 8 - 07 - CMS
8	PV MODULE LAYOUT	SPE22047 - 8- 08 - PL
9	MOUNTING LAYOUT	SPE22047 - 8 - 09 - ML
10	STRING LAYOUT	SPE22047 - 8 - 10 - SL
11	CABLE LAYOUT	SPE22047 - 8 - 11 - CL
12	CABLE TRAY LAYOUT	SPE22047 - 8 - 12 - CT
13	EQUIPMENT LAYOUT	SPE22047 - 8 - 13 - ELA
14	MATERIAL LIST	SPE22047 - 8 - 14 - ELI

CLIENT :

AGINCOURT RESOURCES
MEMBER OF ASTRA

CONTRACTOR :

ENERGIA PRIMA NUSANTARA
member of ASTRA

PROJECT NAME :

PLTS MARTABE

PROJECT LOCATION :

HIGH LAND - WPP

DRAWING TITLE :

DRAWING LIST

DIDESIGN :	REKASURYA	NOVANDY
DIPERIKSA :	EPN	
DISETUJUI :	OWNER	

DATE	REVISI
20 JANUARI 2023	REV.01

DRAWING NUMBER

SPE22047 - 8-02-DL

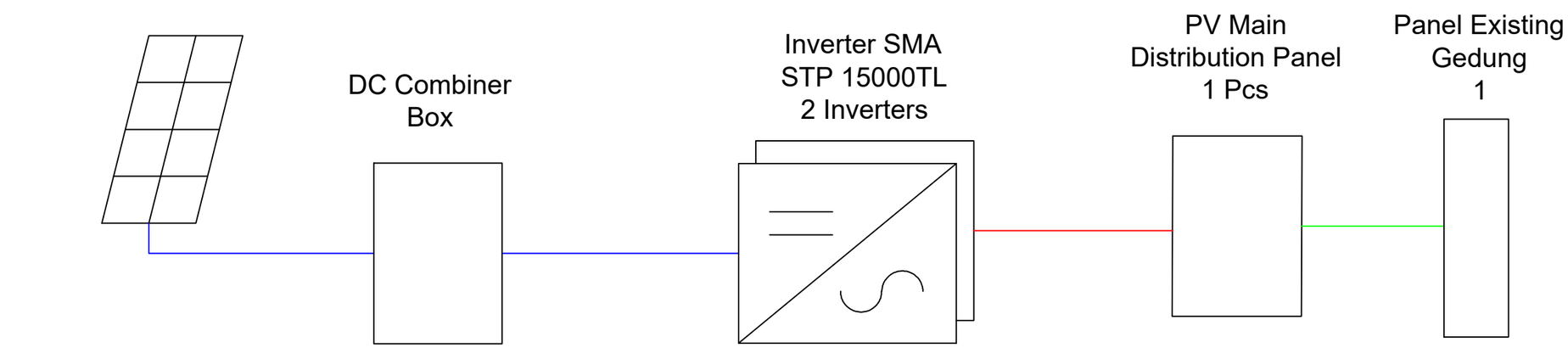

Legend	
—	DC Cable 2 x 1C x 6 sqmm
—	AC Cable 1 x 5C x 10 sqmm
—	AC Cable 1 x 5C x 25 sqmm

CLIENT :

AGINCOURT RESOURCES
MEMBER OF ASTRA

CONTRACTOR :

ENERGIA PRIMA NUSANTARA
member of ASTRA

PROJECT NAME :

PLTS
MARTABE

PROJECT LOCATION :

HIGH LAND - WPP

DRAWING TITLE :

SINGLE LINE
DIAGRAM

DIDESIGN :	REKASURYA	NOVANDY
DIPERIKSA :	EPN	
DISETUJUI :	OWNER	

DATE	REVISI
20 JANUARI 2023	REV.01

DRAWING NUMBER

SPE22047 - 8-
03-SLD-01

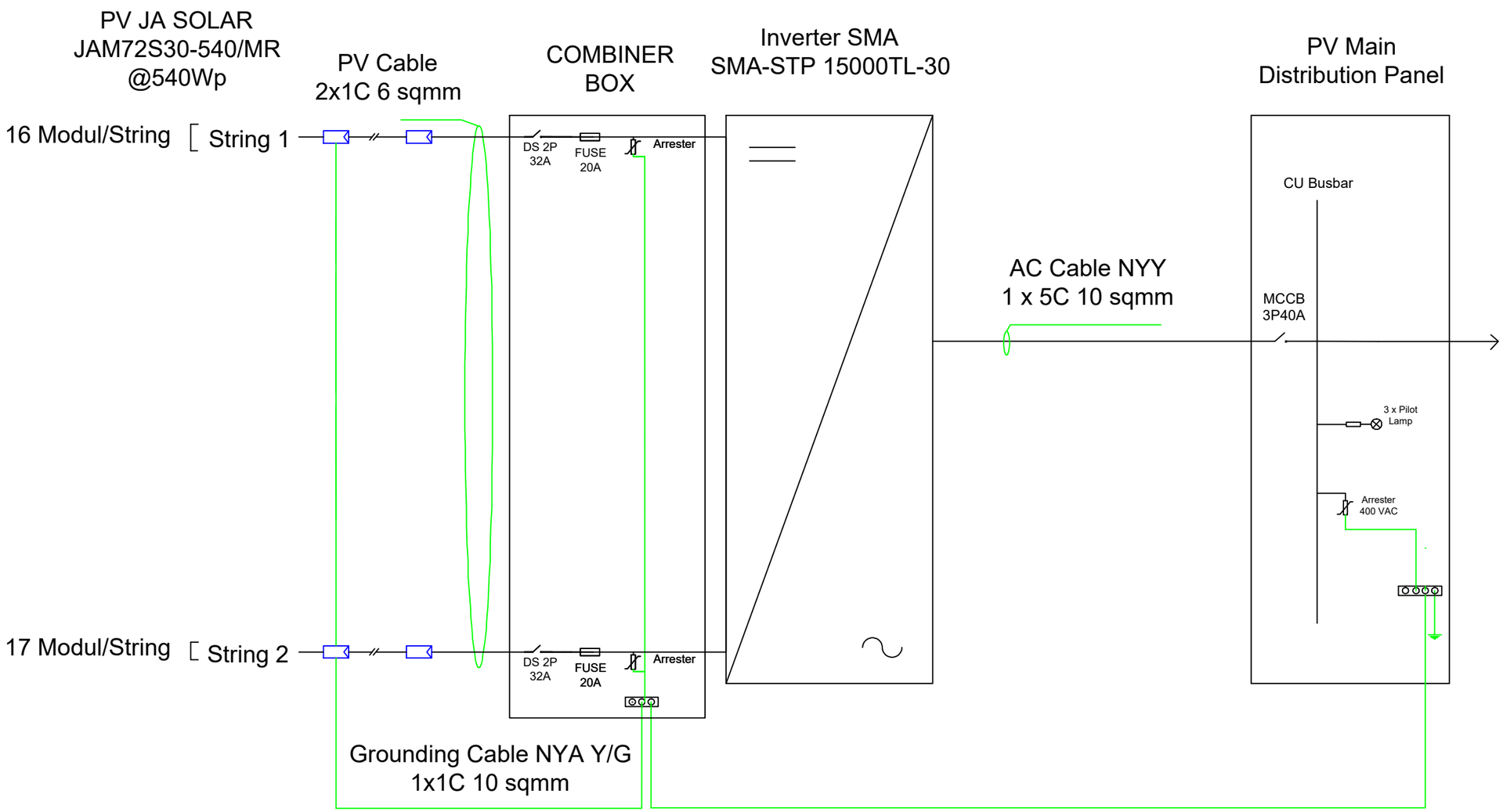

CLIENT :

AGINCOURT RESOURCES
MEMBER OF ASTRA

CONTRACTOR :

ENERGIA PRIMA NUSANTARA
member of ASTRA

PROJECT NAME :

PLTS
MARTABE

PROJECT LOCATION :

HIGH LAND - WPP

DRAWING TITLE :

SINGLE LINE
DIAGRAM

DIDESIGN :	REKASURYA	NOVANDY
DIPERIKSA :	EPN	
DISETUJUI :	OWNER	

DATE	REVISI
20 JANUARI 2023	REV.01

DRAWING NUMBER

SPE22047 - 8-
03-SLD-02

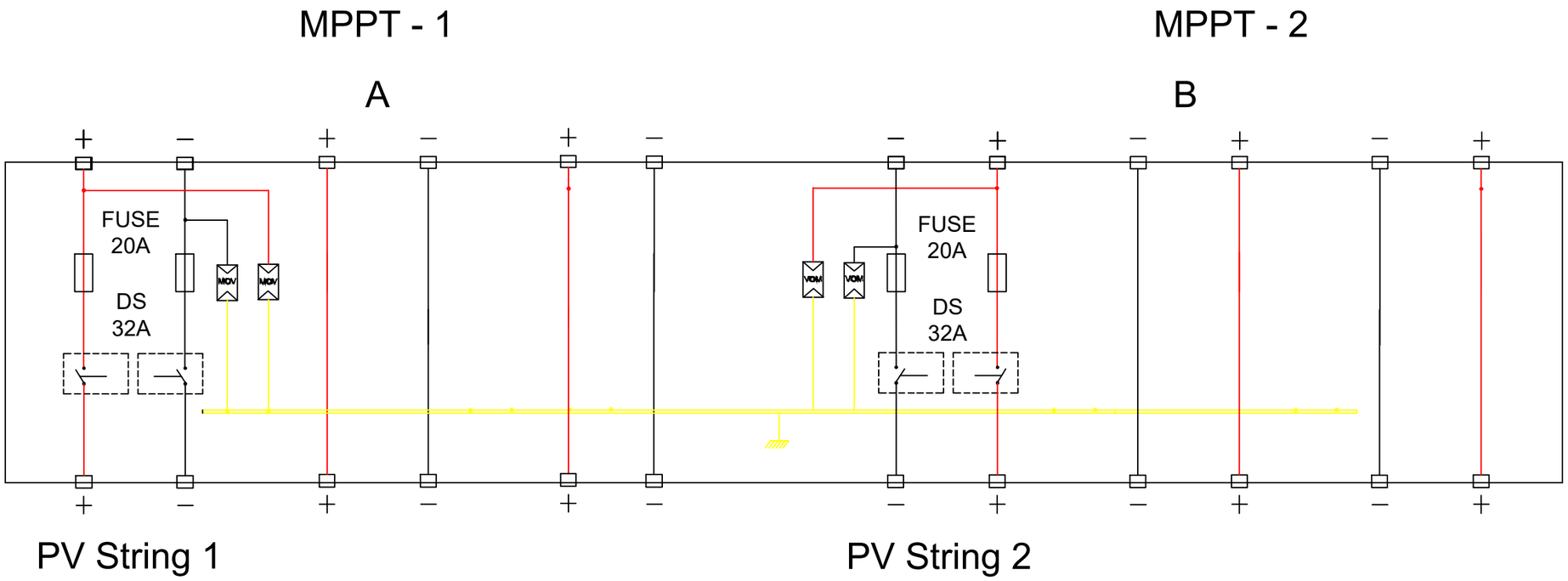

CLIENT :

AGINCOURT RESOURCES
MEMBER OF ASTRA

CONTRACTOR :

ENERGIA PRIMA NUSANTARA
member of ASTRA

PROJECT NAME :

PLTS MARTABE

PROJECT LOCATION :

HIGH LAND - WPP

DRAWING TITLE :

SINGLE LINE DIAGRAM

DIDESIGN :	REKASURYA	NOVANDY
DIPERIKSA :	EPN	
DISETUJUI :	OWNER	

DATE	REVISI
20 JANUARI 2023	REV.01

DRAWING NUMBER

SPE22047 - 8-03-SLD-03

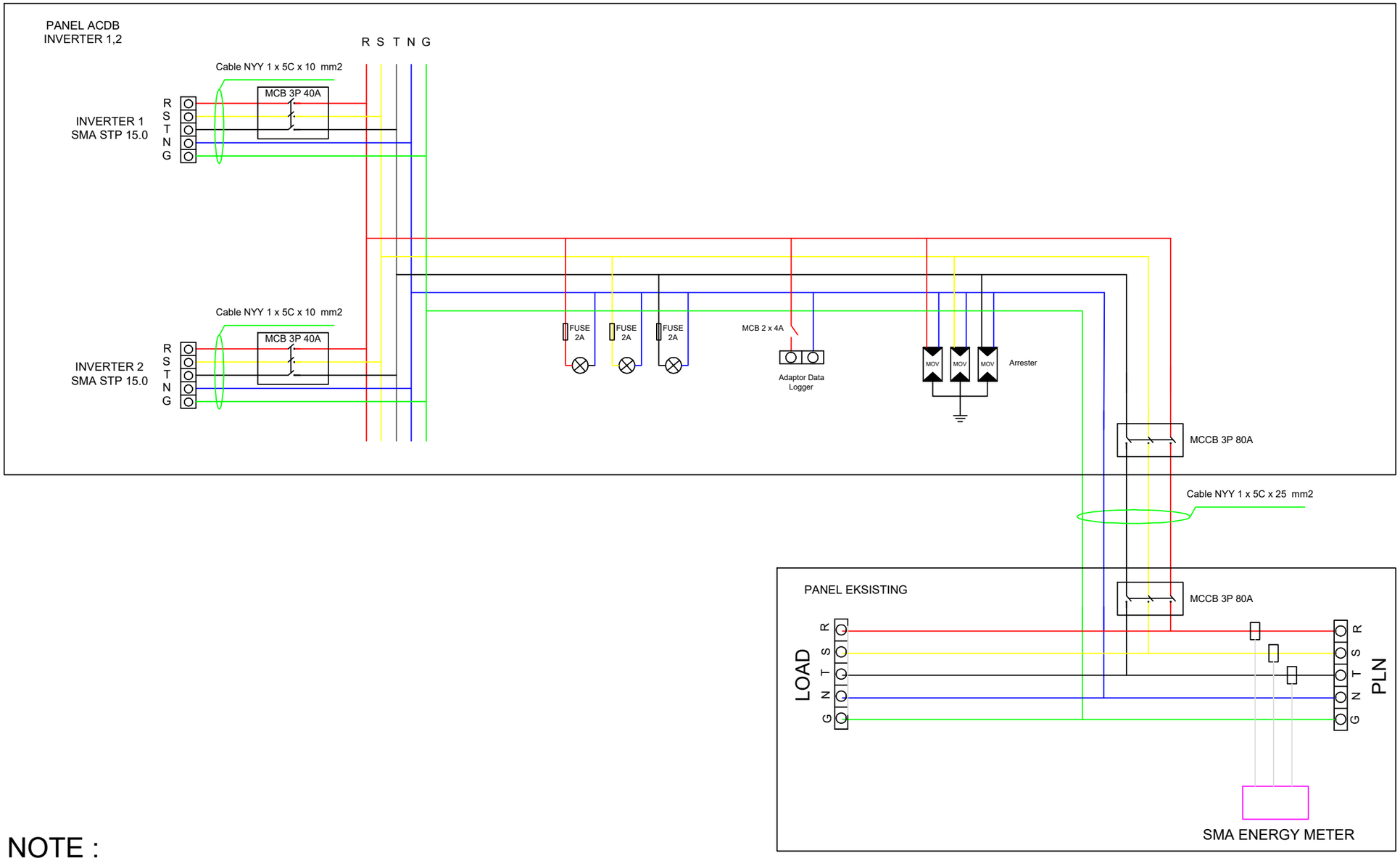

NOTE :

1. PROTEKSI REVERSE POWER TRANSFORMER TAPPING PLTS DI "NON AKTIFKAN"
2. MENGGUNAKAN SKEMA "ANTI ISLANDING" (HANYA OPERASI PARALEL DENGAN PLN)
3. MEMBERIKAN COVER ACRYLIC PADA SEMUA PANEL
4. LOKASI BOX INTERKONEKSI BERDEKATAN DENGAN PANEL EXISTING/INCOMING PLN/LVMDP

CLIENT :

AGINCOURT RESOURCES
MEMBER OF ASTRA

CONTRACTOR :

ENERGIA PRIMA NUSANTARA
member of ASTRA

PROJECT NAME :

PLTS MARTABE

PROJECT LOCATION :

HIGH LAND - WPP

DRAWING TITLE :

SINGLE LINE DIAGRAM

DIDESIGN :	REKASURYA	NOVANDY
DIPERIKSA :	EPN	
DISETUJUI :	OWNER	

DATE	REVISI
20 JANUARI 2023	REV.01

DRAWING NUMBER

SPE22047 - 8-03-SLD-04

BOTTOM VIEW

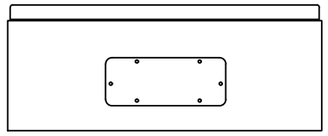

FRONT VIEW

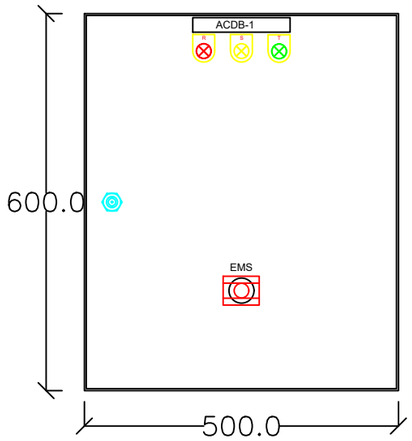

COMPONENT VIEW

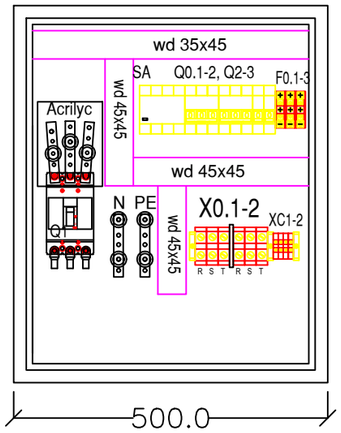

SIDE VIEW

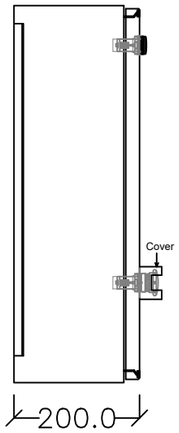

TOP VIEW

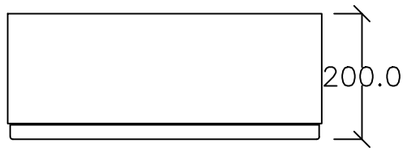

COMPONENT LIST

CODE	DESCRIPTION	TYPE	BRAND	QTY
SA	Surge Arrester 3P+N 20KA	A9L15693	Schneider	1
Q0.1-2	MCB 3P 40A 10KA	iC60N	Schneider	2
F0.1-3	Fuse 4A+Holder	TFB101	Tend/Eq	3
L0.1-3	Pilot Lamp [R, Y, G] 220V	XB7-	Schneider	3
Q1	MCCB 3P 80A 10KA	EZC100F	Schneider	1
	Shunt Trip 220V	EZASHT200AC	Schneider	1
EMS	Emergency Switch	XA2ES542	Schneider	1
Q2-Q3	MCB 1P 6A 4.5KA	iK45a	Schneider	2
X0.1-X0.2	Terminal Input 5P 60A	TBR60	Tend	2
XC	Terminal Control 2P 10A	TBR10	Tend	1

Material	MS 1.2mm² Thickness
Finishing	Powder Coated Oven Baked
Color	Orange
Dimension	W 600 x H 500 x D 200
IP	65

NOTE :

1. PROTEKSI REVERSE POWER TRANSFORMER TAPPING PLTS DI "NON AKTIFKAN"
2. MENGGUNAKAN SKEMA "ANTI ISLANDING" (HANYA OPERASI PARALEL DENGAN PLN)
3. MEMBERIKAN COVER ACRYLIC PADA SEMUA PANEL
4. LOKASI BOX INTERKONEKSI BERDEKATAN DENGAN PANEL EXISTING/INCOMING PLN/LVMDP

CLIENT :

AGINCOURT RESOURCES MEMBER OF ASTRA

CONTRACTOR :

ENERGIA PRIMA NUSANTARA member of ASTRA

PROJECT NAME :

PLTS MARTABE

PROJECT LOCATION :

HIGH LAND - WPP

DRAWING TITLE :

AC DISTRIBUTION BOX

DIDESIGN :	REKASURYA	NOVANDY
DIPERIKSA :	EPN	
DISETUJUI :	OWNER	

DATE	REVISI
20 JANUARI 2023	REV.01

DRAWING NUMBER

SPE22047 - 8-04-ACDB

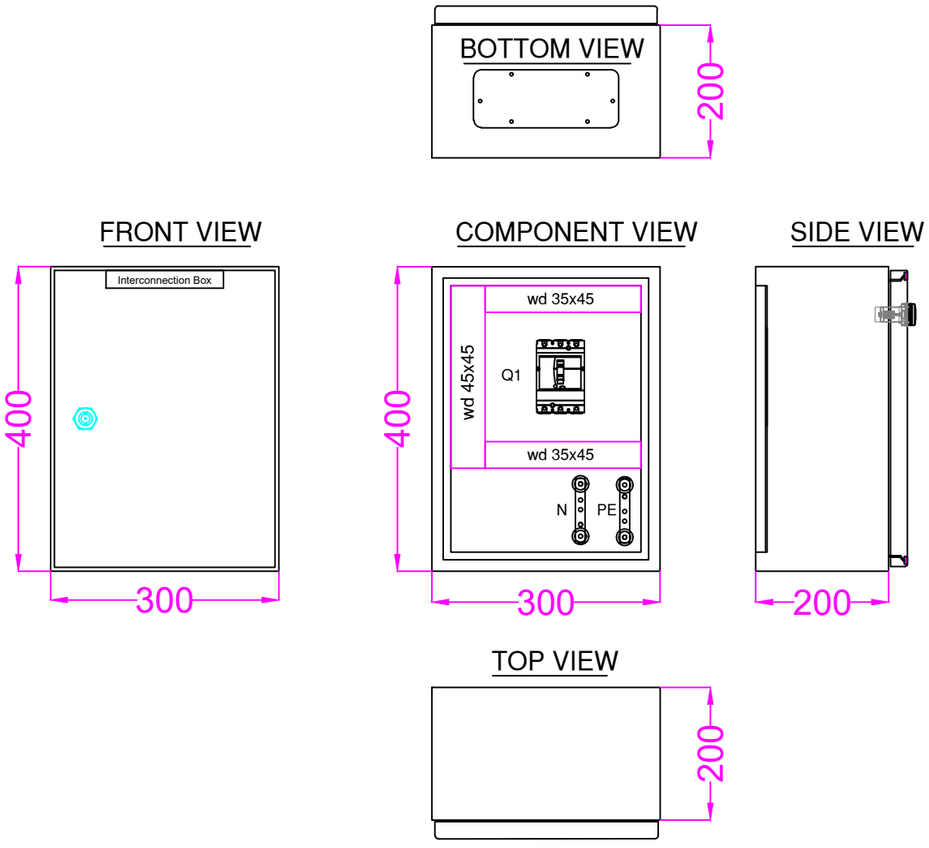

NOTE :
1. PROTEKSI REVERSE POWER TRANSFORMER TAPPING PLTS DI "NON AKTIFKAN"
2. MENGGUNAKAN SKEMA "ANTI ISLANDING" (HANYA OPERASI PARALEL DENGAN PLN)
3. MEMBERIKAN COVER ACRYLIC PADA SEMUA PANEL
4. SUMBER PANEL MONITORING MENGGUNAKAN PLN/GENSET BUKAN PLTS

COMPONENT LIST

CODE	DESCRIPTION	TYPE	BRAND	QTY
Q1	MCCB 3P 80A 10KA	EZC100F	Schneider	1

Material	MS 1.2mm² Thickness
Finishing	Powder Coated Oven Baked
Color	Orange
Dimension	W 400 x H 300 x D 200
IP	41

CLIENT :

AGINCOURT RESOURCES
MEMBER OF ASTRA

CONTRACTOR :

ENERGIA PRIMA NUSANTARA
member of ASTRA

PROJECT NAME :

PLTS MARTABE

PROJECT LOCATION :

HIGH LAND - WPP

DRAWING TITLE :

INTERCONNECTION BOX

DIDESIGN :	REKASURYA	NOVANDY
DIPERIKSA :	EPN	
DISETUJUI :	OWNER	

DATE	REVISI
20 JANUARI 2023	REV.01

DRAWING NUMBER

SPE22047 - 8-05-ICB

BOTTOM VIEW

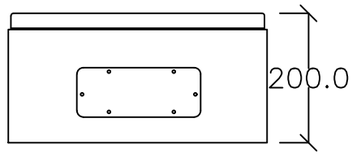

FRONT VIEW

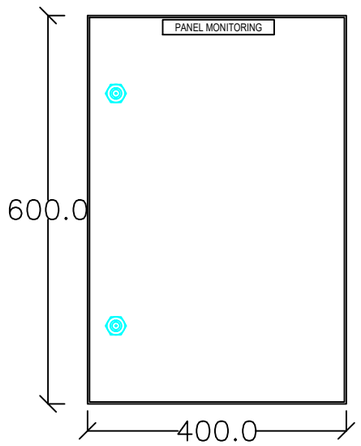

COMPONENT VIEW

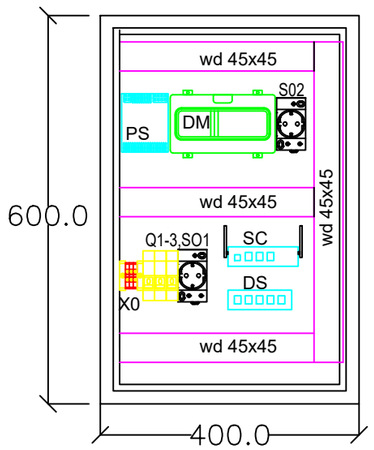

SIDE VIEW

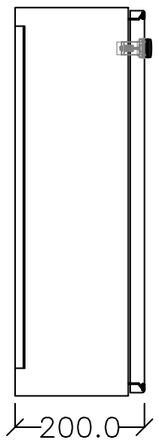

TOP VIEW

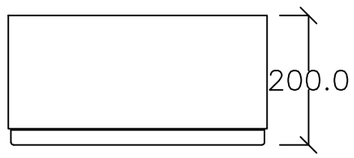

COMPONENT LIST

CODE	DESCRIPTION	TYPE	BRAND	QTY
PS	DC Power Supply 24V	SMA	SMA	1
DM	SMA Data Manager	EDMM-10	SMA	1
DS	TP - Link - 5 Port	TL-SG105	TP - Link	1
WF	SIMCARD 3G/4G	MR6400	TP - Link	1
SO1, 2	Socket Outlet 1P+N+PE	A9A15310	Schneider	2
Q1-Q3	MCB 1P 6A 4.5KA	iK45a	Schneider	3
X0	Terminal Input 4mm	NSYTRV42	Schneider	2
	Terminal Input 4mm(Grouding)	NSYTRV42PE	Schneider	1
	End Section	NSYTRVC22	Schneider	1

Material	MS 1.2mm² Thickness
Finishing	Powder Coated Oven Baked
Color	Orange
Dimension	W 600 x H 400 x D 200
IP	65

NOTE :

1. PROTEKSI REVERSE POWER TRANSFORMER TAPPING PLTS DI "NON AKTIFKAN"
2. MENGGUNAKAN SKEMA "ANTI ISLANDING" (HANYA OPERASI PARALEL DENGAN PLN)
3. MEMBERIKAN COVER ACRYLIC PADA SEMUA PANEL
4. SUMBER PANEL MONITORING MENGGUNAKAN PLN/GENSET BUKAN PLTS

CLIENT :

AGINCOURT RESOURCES
MEMBER OF ASTRA

CONTRACTOR :

ENERGIA PRIMA NUSANTARA
member of ASTRA

PROJECT NAME :

PLTS MARTABE

PROJECT LOCATION :

HIGH LAND - WPP

DRAWING TITLE :

MONITORING BOX

DIDESIGN :	REKASURYA	NOVANDY
DIPERIKSA :	EPN	
DISETUJUI :	OWNER	

DATE	REVISI
20 JANUARI 2023	REV.01

DRAWING NUMBER

SPE22047 - 8-06-MB

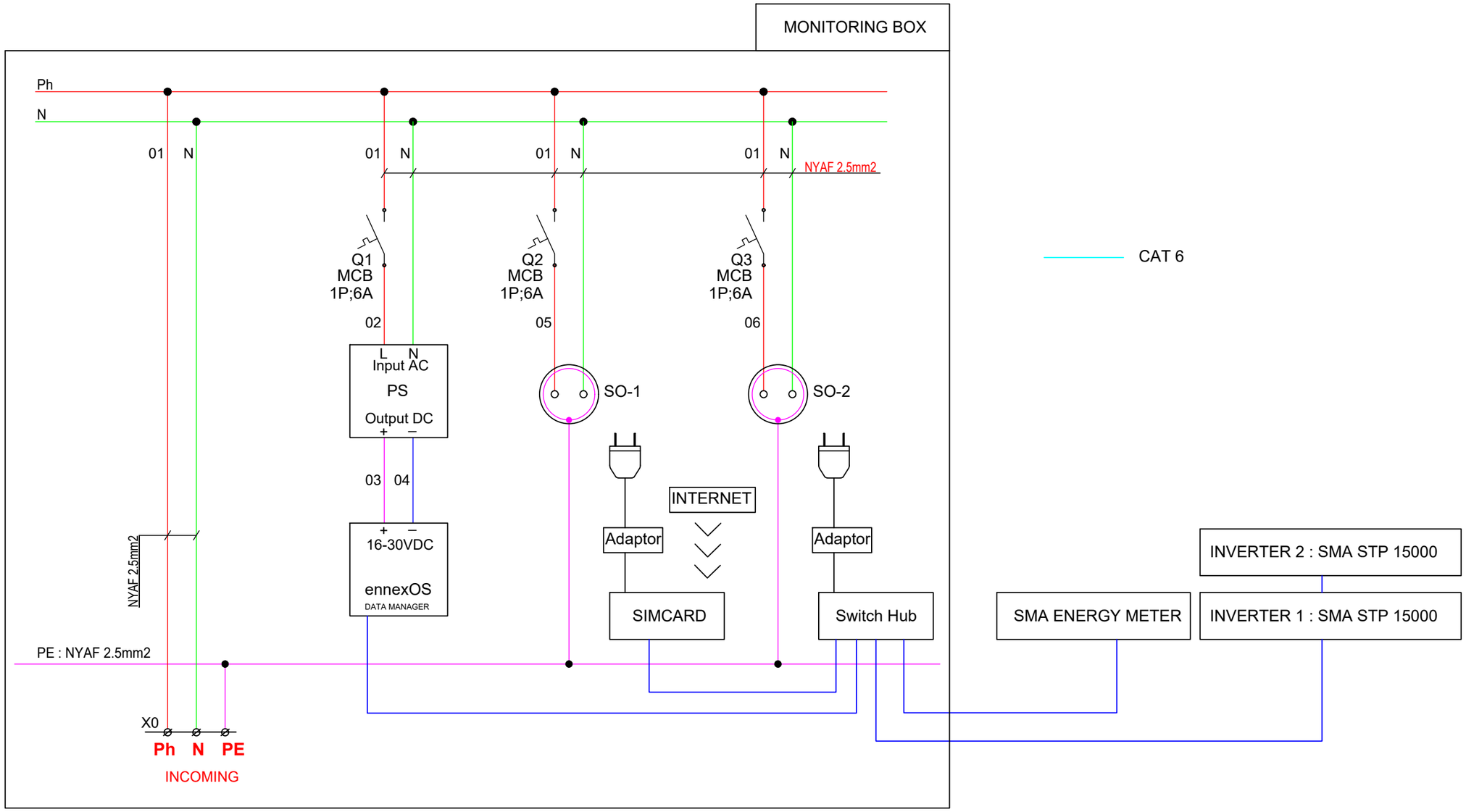

NOTE :

1. PROTEKSI REVERSE POWER TRANSFORMER TAPPING PLTS DI "NON AKTIFKAN"
2. MENGGUNAKAN SKEMA "ANTI ISLANDING" (HANYA OPERASI PARALEL DENGAN PLN)
3. MEMBERIKAN COVER ACRYLIC PADA SEMUA PANEL
4. SUMBER LISTRIK PANEL MONITORING BERASAL DARI PLN/GENSET BUKAN BERASAL DARI PLTS

CLIENT :

AGINCOURT RESOURCES
MEMBER OF ASTRA

CONTRACTOR :

ENERGIA PRIMA NUSANTARA
member of ASTRA

PROJECT NAME :

PLTS MARTABE

PROJECT LOCATION :

HIGH LAND - WPP

DRAWING TITLE :

COMMUNICATION & MONITORING SYSTEM

DIDESIGN :	REKASURYA	NOVANDY
DIPERIKSA :	EPN	
DISETUJUI :	OWNER	

DATE	REVISI
20 JANUARI 2023	REV.01

DRAWING NUMBER

SPE22047 - 8-07-CMS

LAY OUT SOLAR PV

	BOX PANEL
	INVERTER

Total PV	Type PV
36 Module	JA SOLAR JAM72S30-540/MR
19.4 kWp	

CLIENT :

AGINCOURT RESOURCES
MEMBER OF ASTRA

CONTRACTOR :

ENERGIA PRIMA NUSANTARA
member of ASTRA

PROJECT NAME :

PLTS MARTABE

PROJECT LOCATION :

HIGH LAND - WPP

DRAWING TITLE :

PV MODULE LAYOUT

DIDESIGN :	REKASURYA	NOVANDY
DIPERIKSA :	EPN	
DISETUJUI :	OWNER	

DATE	REVISI
20 JANUARI 2023	REV.01

DRAWING NUMBER

SPE22047 - 8-08-PL-01

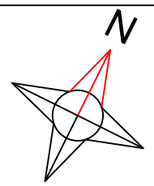

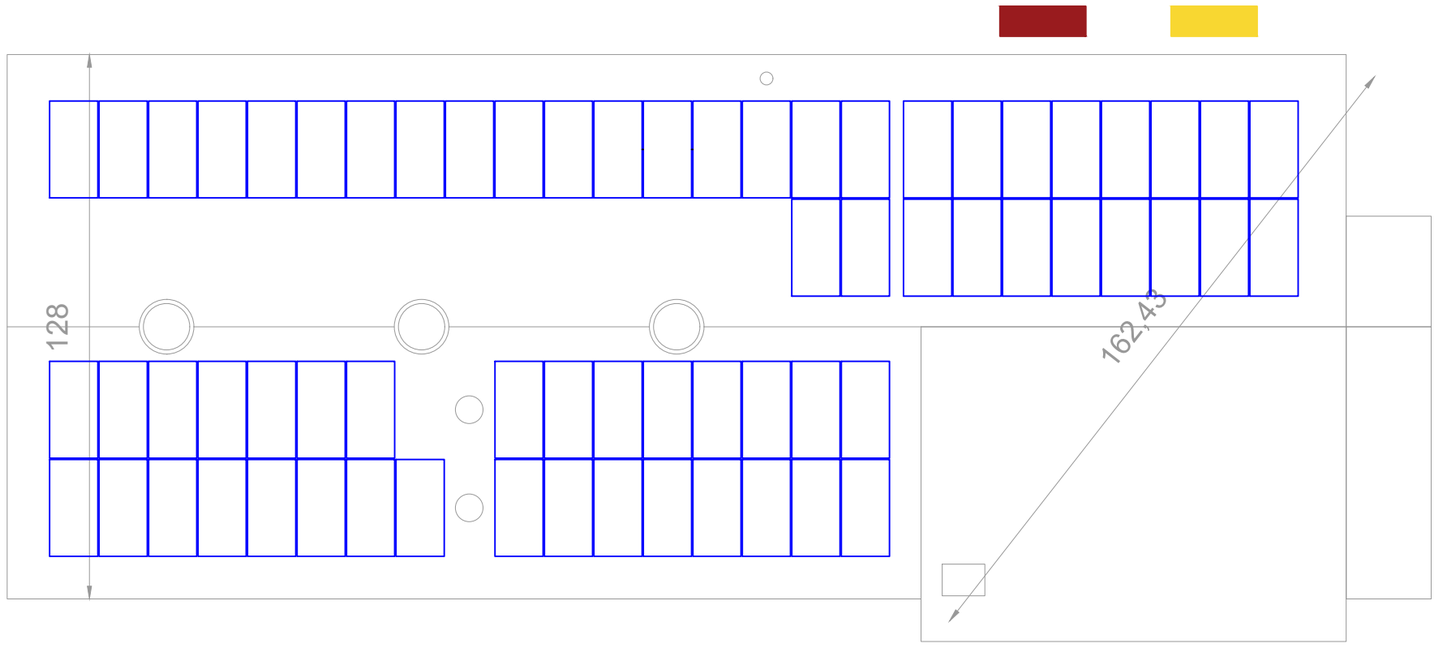

Total PV	Type PV
66 Module	JA SOLAR JAM72S30-540/MR
35.6 kWp	

CLIENT :

AGINCOURT RESOURCES
MEMBER OF ASTRA

CONTRACTOR :

ENERGIA PRIMA NUSANTARA
member of ASTRA

PROJECT NAME :

PLTS MARTABE

PROJECT LOCATION :

HIGH LAND - WPP

DRAWING TITLE :

PV MODULE LAYOUT

DIDESIGN :	REKASURYA	NOVANDY
DIPERIKSA :	EPN	
DISETUJUI :	OWNER	

DATE	REVISI
20 JANUARI 2023	REV.01

DRAWING NUMBER

SPE22047 - 8-08-PL-01

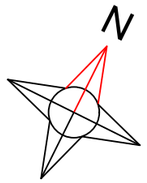

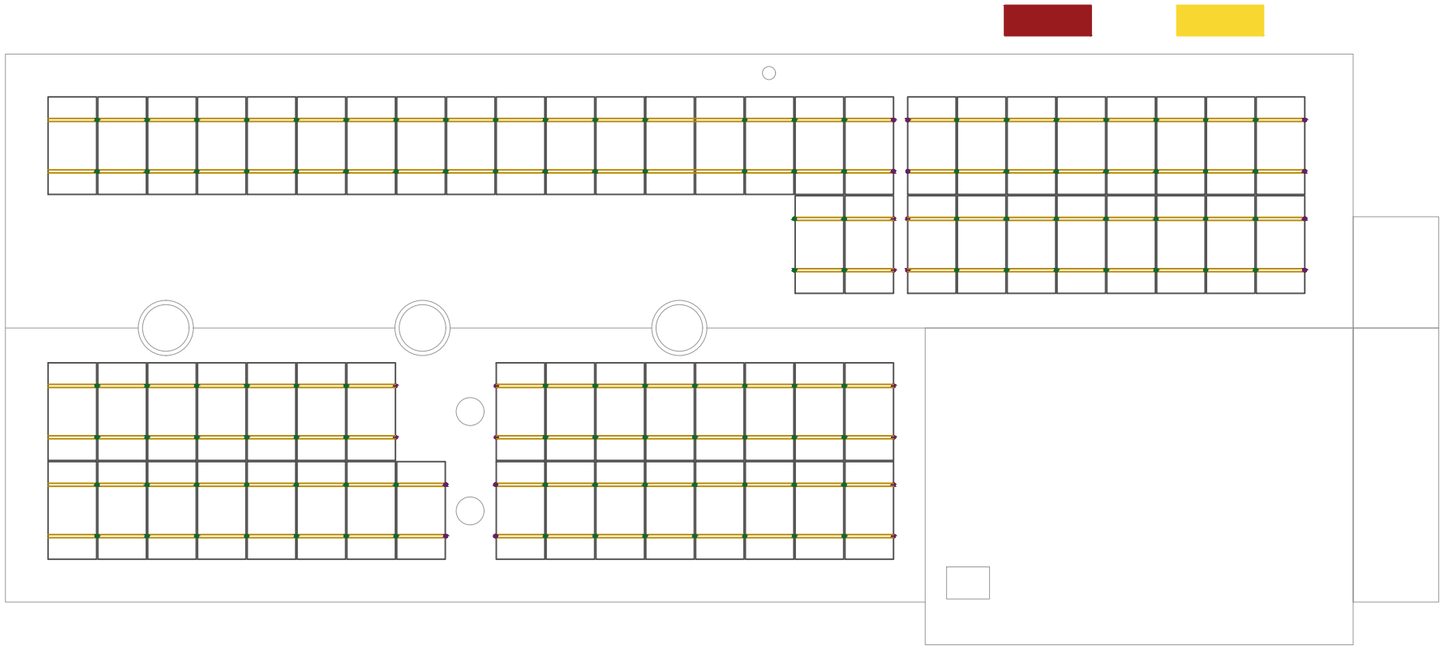

MOUNTING LAY OUT

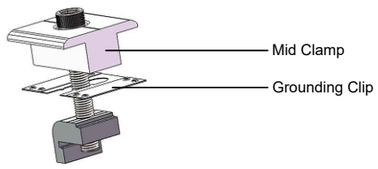

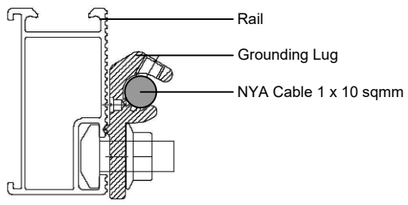

ROOF TYPE	MOUNTING CAP.
L BRACKET	35.6 kWp

CLIENT :

AGINCOURT RESOURCES
MEMBER OF ASTRA

CONTRACTOR :

ENERGIA PRIMA NUSANTARA
member of ASTRA

PROJECT NAME :

PLTS MARTABE

PROJECT LOCATION :

HIGH LAND - WPP

DRAWING TITLE :

MOUNTING LAYOUT

DIDESIGN :	REKASURYA	NOVANDY
DIPERIKSA :	EPN	
DISETUJUI :	OWNER	

DATE	REVISI
20 JANUARI 2023	REV.01

DRAWING NUMBER

SPE22047 - 8-08-ML-01

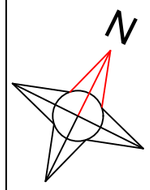

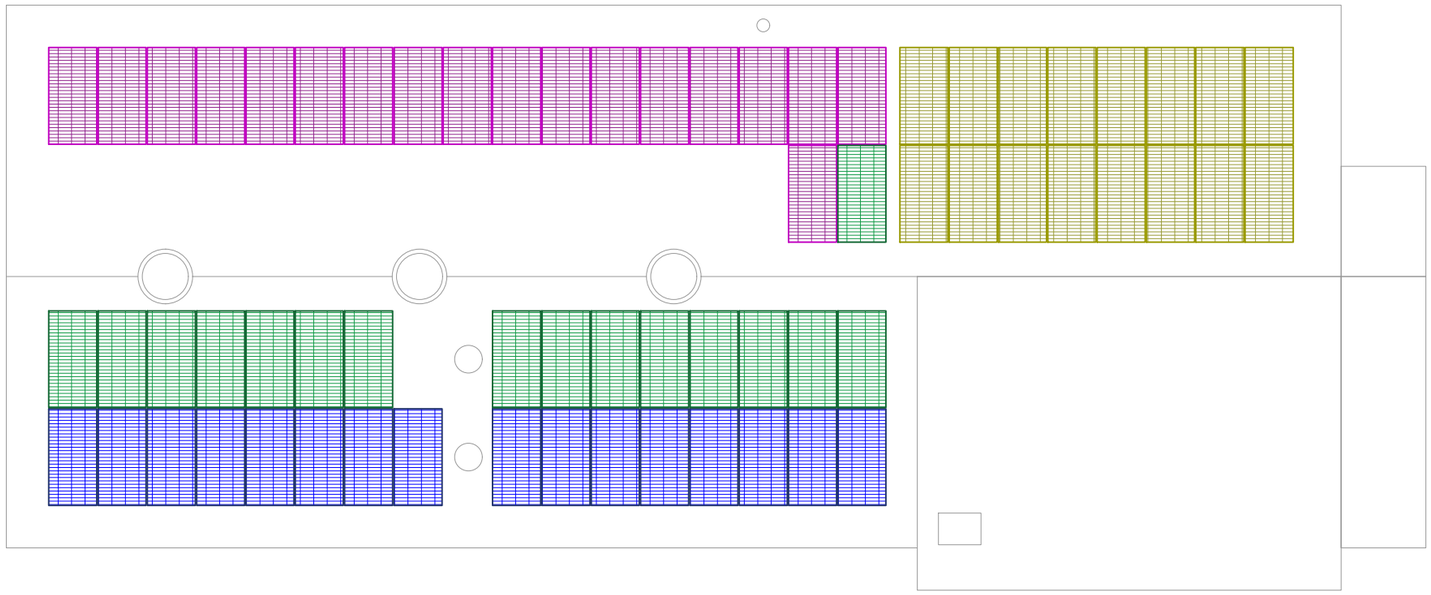

CODE	INVERTER 1 STP 15	PV/STRING
	STRING 1	17 MODULE
	STRING 2	16 MODULE

CODE	INVERTER 1 STP 15	PV/STRING
	STRING 1	17 MODULE
	STRING 2	16 MODULE

CLIENT :

AGINCOURT RESOURCES
MEMBER OF ASTRA

CONTRACTOR :

ENERGIA PRIMA NUSANTARA
member of ASTRA

PROJECT NAME :

PLTS MARTABE

PROJECT LOCATION :

HIGH LAND - WPP

DRAWING TITLE :

STRING LAYOUT

DIDESIGN :	REKASURYA	NOVANDY
DIPERIKSA :	EPN	
DISETUJUI :	OWNER	

DATE	REVISI
20 JANUARI 2023	REV.01

DRAWING NUMBER

SPE22047 - 8-10-SL

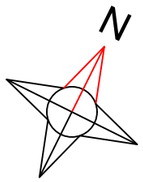

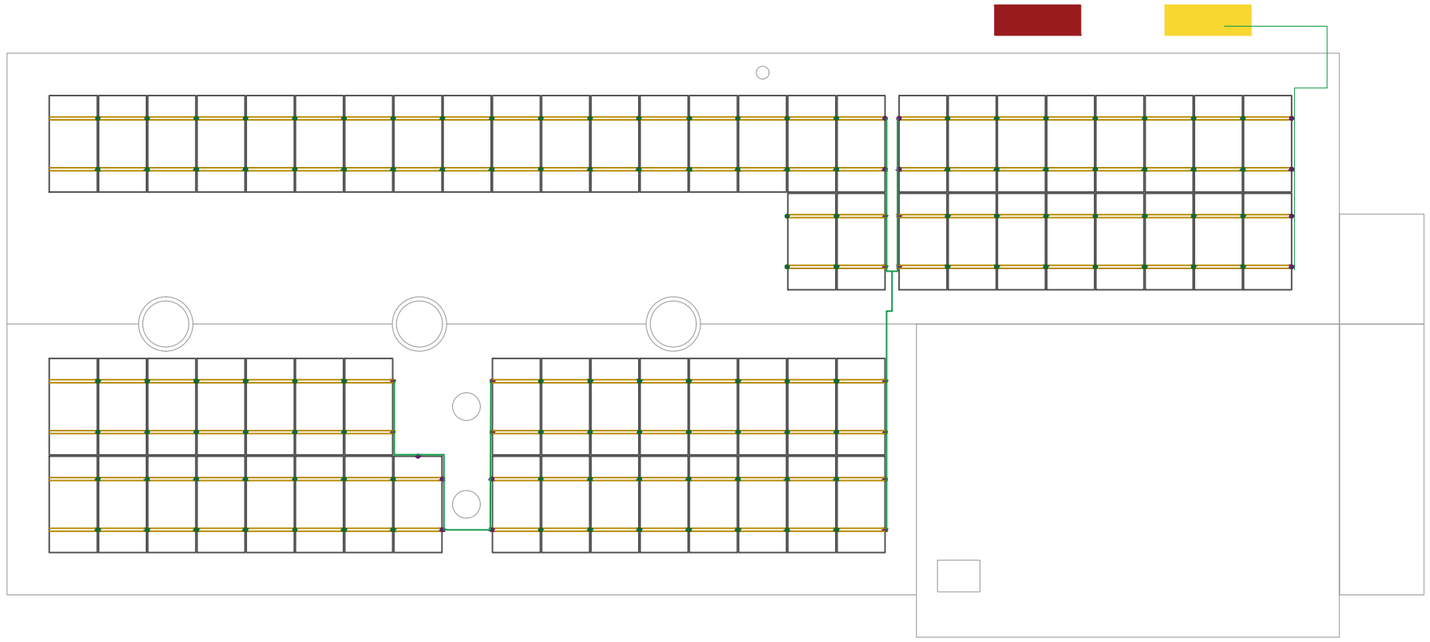

GROUNDING CABLE LAY OUT

CODE	DESCIPTION	SPECIFICATION	LENGTH (m)
	CABLE GROUND	1C x 10 sqmm	50

CLIENT :

AGINCOURT RESOURCES
MEMBER OF ASTRA

CONTRACTOR :

ENERGIA PRIMA NUSANTARA
member of ASTRA

PROJECT NAME :

PLTS MARTABE

PROJECT LOCATION :

HIGH LAND - WPP

DRAWING TITLE :

GROUNDING LAYOUT

DIDESIGN :	REKASURYA	NOVANDY
DIPERIKSA :	EPN	
DISETUJUI :	OWNER	

DATE	REVISI
20 JANUARI 2023	REV.01

DRAWING NUMBER

SPE22047 - 8-11-GL

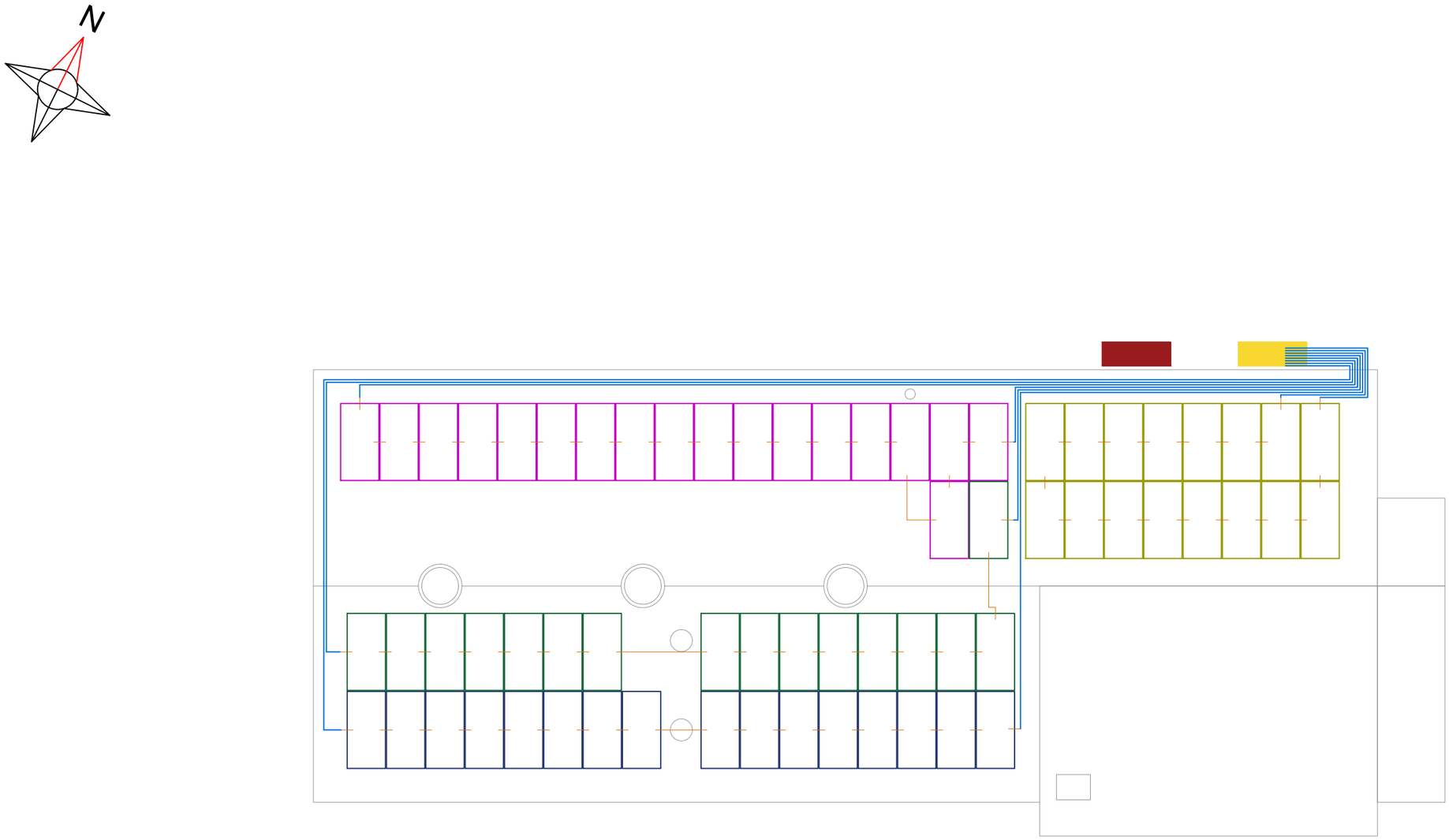

CODE	DESCIPTION	SPECIFICATION	LENGTH (m)
	CABLE SOLAR DC	1C x 6 sqmm	305

CLIENT :

AGINCOURT RESOURCES
MEMBER OF ASTRA

CONTRACTOR :

ENERGIA PRIMA NUSANTARA
member of ASTRA

PROJECT NAME :

PLTS MARTABE

PROJECT LOCATION :

HIGH LAND - WPP

DRAWING TITLE :

CABLE LAYOUT

DIDESIGN :	REKASURYA	NOVANDY
DIPERIKSA :	EPN	
DISETUJUI :	OWNER	

DATE	REVISI
20 JANUARI 2023	REV.01

DRAWING NUMBER

SPE22047 - 8-12-CL

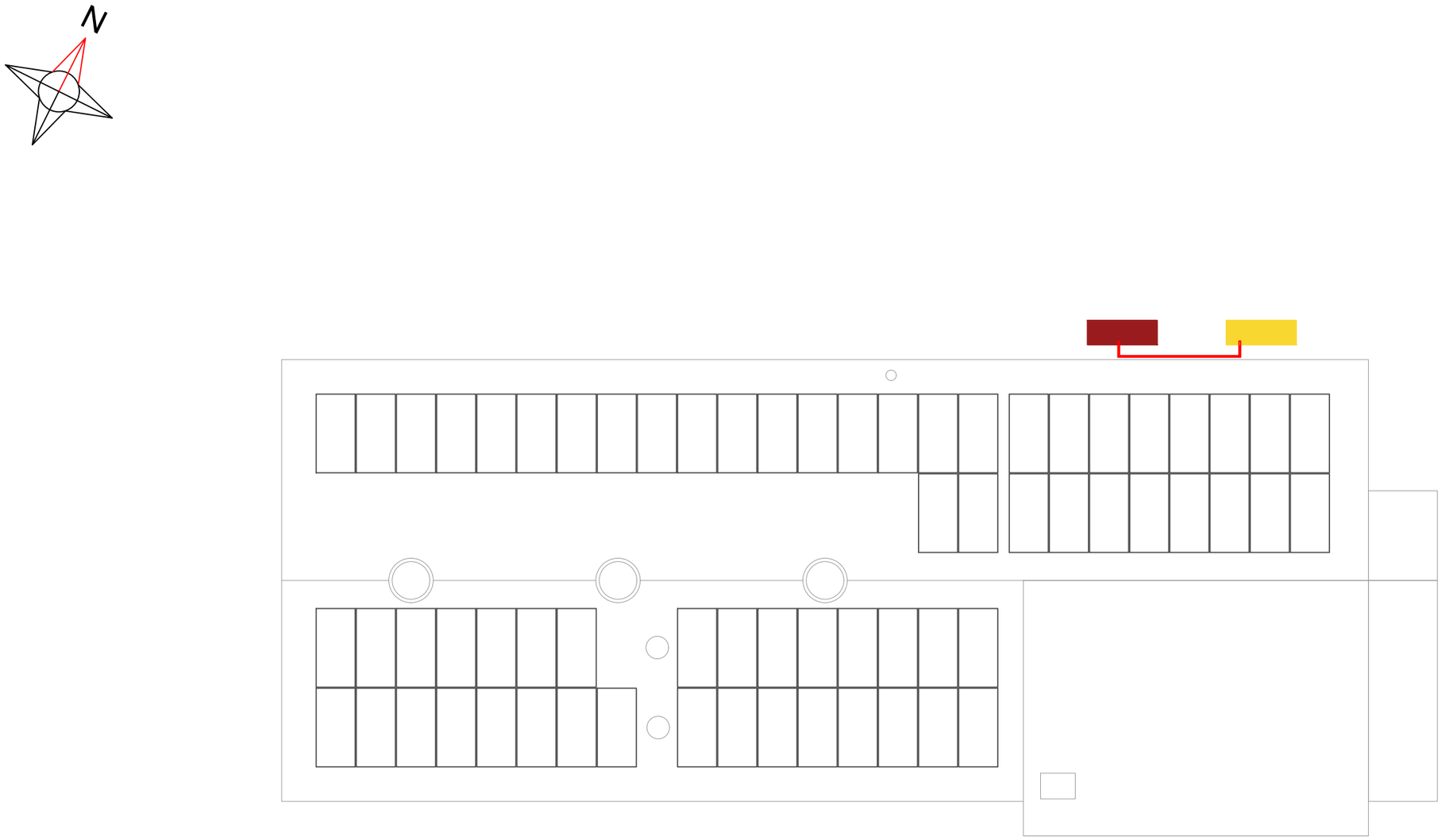

CODE	DESCIPTION	SPECIFICATION	LENGTH (m)
	Kabel AC dari Inverter ke Panel Tapping	1 x 5C x 25 sqmm	15

CLIENT :

AGINCOURT RESOURCES
MEMBER OF ASTRA

CONTRACTOR :

ENERGIA PRIMA NUSANTARA
member of ASTRA

PROJECT NAME :

PLTS MARTABE

PROJECT LOCATION :

HIGH LAND - WPP

DRAWING TITLE :

CABLE LAYOUT

DIDESIGN :	REKASURYA	NOVANDY
DIPERIKSA :	EPN	
DISETUJUI :	OWNER	

DATE	REVISI
20 JANUARI 2023	REV.01

DRAWING NUMBER

SPE22047 - 8-12-CL-02

CODE	DESCIPTION	SPECIFICATION	LENGTH (m)
	Kabel AC dari Inverter ke Panel Tapping	1 x 5C x 25 sqmm	8
	CABLE SOLAR DC	1C x 6 sqmm	305

CODE	DESCIPTION	SPECIFICATION	LENGTH (m)
	CONDUIT 1'	METAL	10
	CABLE TRAY 50 X 50	GALVANIZED	91
	CABLE TRAY 50 X 100	GALVANIZED	7

CLIENT :

AGINCOURT RESOURCES
MEMBER OF ASTRA

CONTRACTOR :

ENERGIA PRIMA NUSANTARA
member of ASTRA

PROJECT NAME :

PLTS MARTABE

PROJECT LOCATION :

HIGH LAND - WPP

DRAWING TITLE :

CABLE LAYOUT

DIDESIGN :	REKASURYA	NOVANDY
DIPERIKSA :	EPN	
DISETUJUI :	OWNER	

DATE	REVISI
20 JANUARI 2023	REV.01

DRAWING NUMBER

SPE22047 - 8-12-CL-03

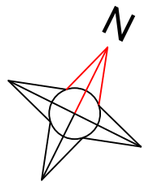

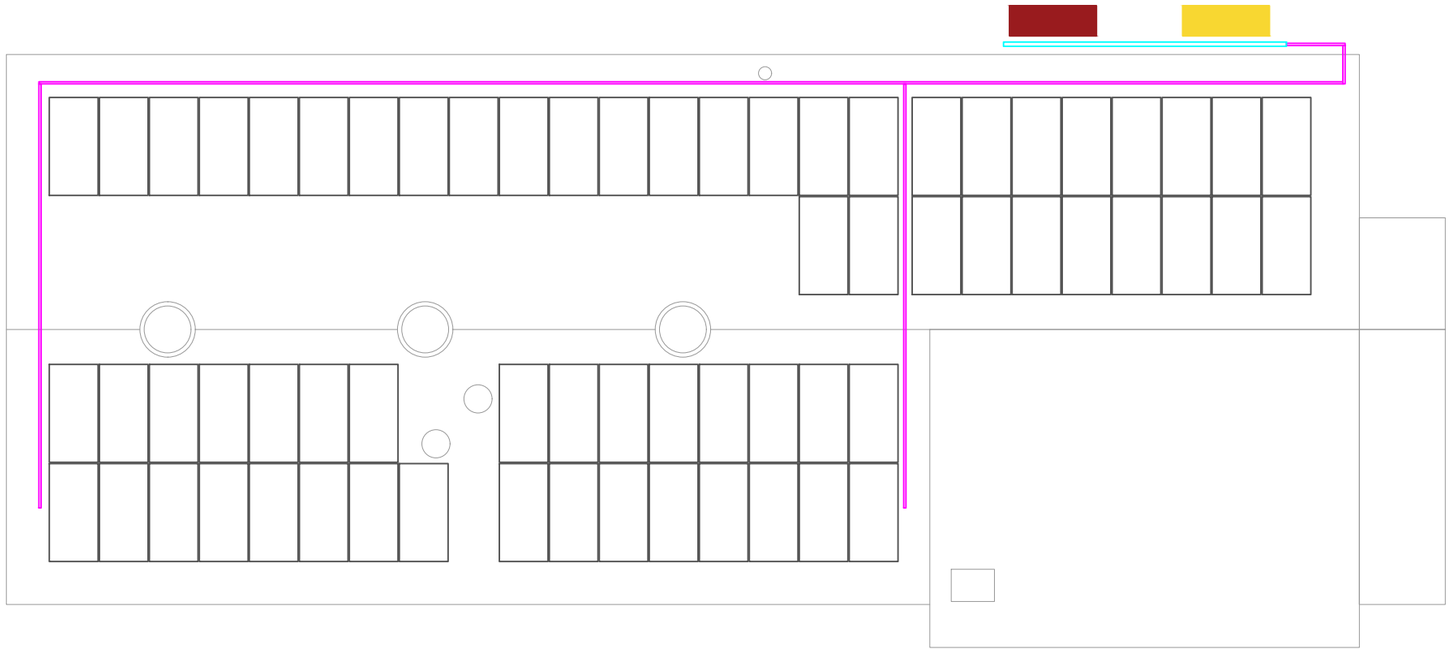

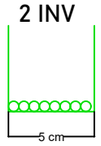

CODE	DESCIPTION	SPECIFICATION	LENGTH (m)
	CONDUIT 1'	METAL	10
	CABLE TRAY 50 X 50	GALVANIZED	91
	CABLE TRAY 50 X 100	GALVANIZED	7

CLIENT :

AGINCOURT RESOURCES
MEMBER OF ASTRA

CONTRACTOR :

ENERGIA PRIMA NUSANTARA
member of ASTRA

PROJECT NAME :

PLTS MARTABE

PROJECT LOCATION :

HIGH LAND - WPP

DRAWING TITLE :

CABLE TRAY LAYOUT

DIDESIGN :	REKASURYA	NOVANDY
DIPERIKSA :	EPN	
DISETUJUI :	OWNER	

DATE	REVISI
20 JANUARI 2023	REV.01

DRAWING NUMBER

SPE22047 - 8-13-CT-01

A-A'
Section of Tray Cable
Size 500x50
Filled Factor : 20 %

B-B'
Section of Tray Cable
Size 100x50
Filled Factor : 32 %

C-C'
Section of Tray Cable
Size 100x50
Filled Factor : 30 %

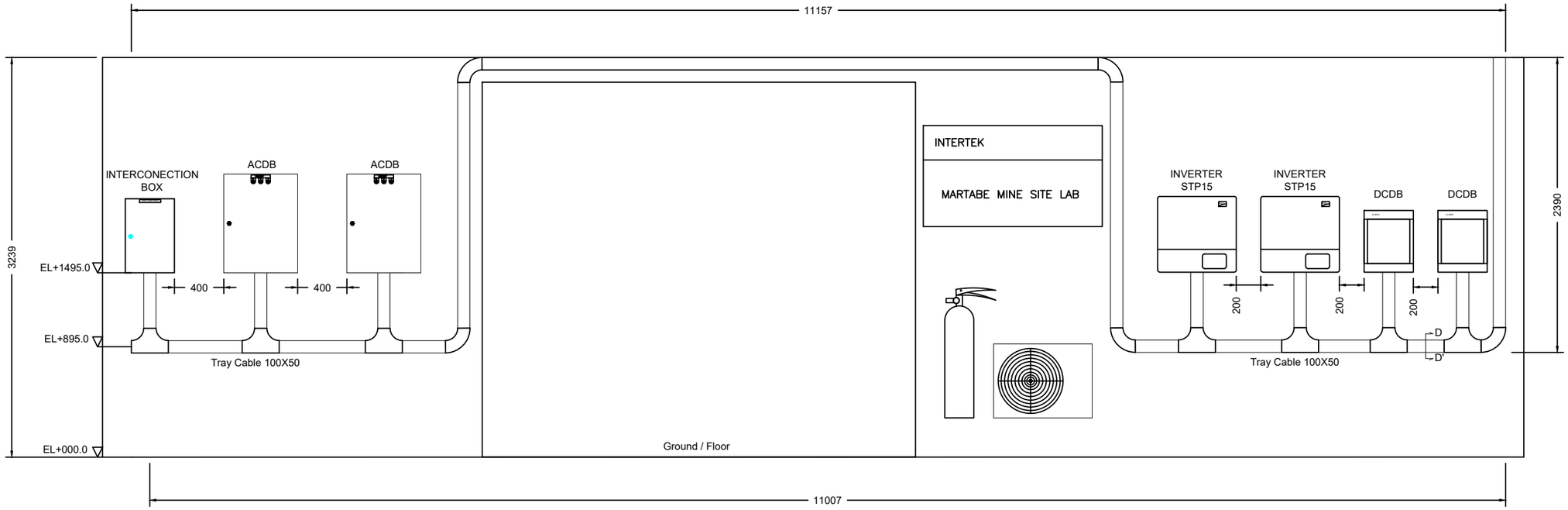

EQUIPMENT LAYOUT

No	Tray Cable	Quantity	Unit	Remarks
1	Size 100x50	20	Meter	

CLIENT :

AGINCOURT RESOURCES
MEMBER OF ASTRA

CONTRACTOR :

ENERGIA PRIMA NUSANTARA
member of ASTRA

PROJECT NAME :

PLTS MARTABE

PROJECT LOCATION :

HIGH LAND - WPP

DRAWING TITLE :

EQUIPMENT LAYOUT

DIDESIGN :	REKASURYA	NOVANDY
DIPERIKSA :	EPN	
DISETUJUI :	OWNER	

DATE	REVISI
20 JANUARI 2023	REV.01

DRAWING NUMBER

SPE22047 - 8-14-ELA

TABLE 1. EQUIPMENT LIST

NO	EQUIPMENT	SPECIFICATION	QTY	UNIT
1	PV Modul	Solar Panel - JA Solar, JAM72S230-540 MR (1000V)	66	Pcs
		W 2279 mm x H 1134 mm x D 35 mm , Wt : 28.6 kg		
		Power:540Wp, Voe:49.6V, Vmp:41.64V, Isc:13.86A, Imp:12.97A		
2	Inverter	SMA Solar Inverters		
		SMA STP 15000TL Rateed Power 15KW	2	Pcs
3	Monitoring System	SMA Solar Monitoring System	1	Assy
		Enclosure box-1 . Size W400xH600xD300mm. Material: 100% Polycarbonate. IP:65	1	Unit
		SMA Data Manager EDMM-110+DC+Power Supply	1	Unit
		Router TPLink MR6400 3G/4G, Data Swicth TP Link TL SG105	1	Pcs
		Wireles Range Extender TP Link TP TL POE 150S	1	Pcs
4	Current Transformer	Model: As field req. (Based On Breaker Existing) Class1, Schneider, Socomec, GAE.	3	Pcs
5	Mounting Structure	PLP Solar Mounting System. Type: L BRAKET	35.6	kWP
6	DC Combiner Box	Enclosure Box. ZBeny- 2 IN 2 OUT- Mat: 100%polycarbonate Anti UV Protection	2	Assy
		4 x FUSE 1000V DC 20 A		
		2 x DS 32 A 1000 V DC		
		2 x SPD DC 1000V DC		
7	ACDB Panel	ACDB Panel Box Assy.	1	Assy
		Enclosure Box-3, Size : W:500xH:600xD:200 mm, Material: Metal Sheet Grey	1	Assy
		Completed with Surge Arrester 3P+N 20kA	1	Pcs
		MCCB 3P 80 A 36KA NSX160F Scheneider	1	Pcs
		MCB 3P 40 A 10KA IC60N Scheneider	2	Pcs
		Shunt Trip 220V EZESHT200AC Scheneider	1	Pcs
		Emergency Switch XA2ES542 Schneider	1	Pcs
8	Panel Interkoneksi	SPPC Plate Galvanis plat 2mm cover plat 1.8 mm. Dim H400xW300xD200	1	Assy
		MCCB 3P 80 A 36kA NSX160F Scheneider	1	Pcs
		Completed with Surge Arrester 3P+N 20kA	1	Pcs
9	Solar Cables	Solar Cable, 1x1C 6mm2	305	meter
10	Power Cables	NYY 1 x 5C x 10 mm2/1kV (Inverter to ACDB)	10	meter
		NYY 1 x 5C x 25 mm2/1kV (Inverter to ACDB to Existing)	15	meter
11	Data Cable	UTP Cable, CAT6, Belden	150	meter
12	Grounding Cable	NYAF-Y/G 1x1Cx10 mm2	50	meter
13	Cable Tray	Tray Cable, Size 50x50mm, Mat.: Hot Deep Galvanized	91	meter
		Tray Cable, Size 100x50mm, Mat.: Hot Deep Galvanized	27	meter
14	Conduit	Flexible metal conduit (black PVC coated), Size : 1 Inchi	10	meter

CLIENT :

AGINCOURT RESOURCES
MEMBER OF ASTRA

CONTRACTOR :

ENERGIA PRIMA NUSANTARA
member of ASTRA

PROJECT NAME :

PLTS MARTABE

PROJECT LOCATION :

HIGH LAND - WPP

DRAWING TITLE :

EQUIPMENT LIST

DIDESIGN :	REKASURYA	NOVANDY
DIPERIKSA :	EPN	
DISETUJUI :	OWNER	

DATE	REVISI
20 JANUARI 2023	REV.01

DRAWING NUMBER

SPE22047 - 8-14-ELI