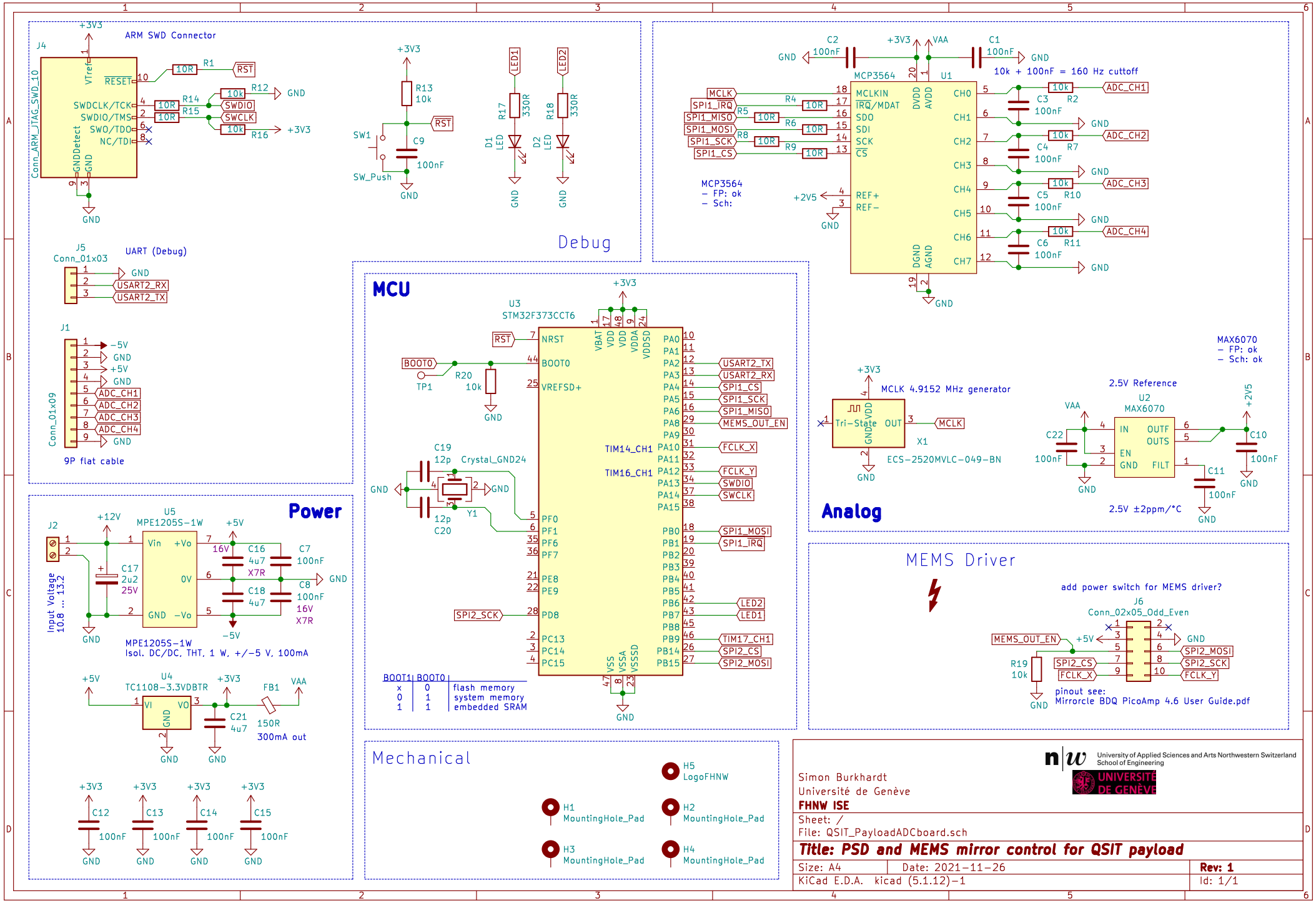
ARM SWD Connector
J4
Conn_ARM_JTAG_SWD_10
+3V3
VTref
RESET
SWDCLK/TCK
SWDIO/TMS
SWO/TDO
NC/TDI
GNDDetect
GND
R1 10R RST
R14 10R
R15 10R
R12 10k GND
SWDIO
SWCLK
R16 10k +3V3
R13 10k
SW1
SW_Push
C9 100nF
LED1
LED2
R17 330R
R18 330R
D1 LED
D2 LED
Debug
J5
Conn_01x03
UART (Debug)
USART2_RX
USART2_TX
J1
Conn_01x09
-5V
+5V
ADC_CH1
ADC_CH2
ADC_CH3
ADC_CH4
9P flat cable
C2 100nF
C1 100nF
10k + 100nF = 160 Hz cuttoff
MCP3564
U1
MCLK
SPI1_IRQ
SPI1_MISO
SPI1_MOSI
SPI1_SCK
SPI1_CS
MCLKIN
IRQ/MDAT
SDO
SDI
SCK
CS
REF+
REF-
DVDD
AVDD
DGND
AGND
CH0
CH1
CH2
CH3
CH4
CH5
CH6
CH7
C3 100nF
C4 100nF
C5 100nF
C6 100nF
R2 10k
R7 10k
R10 10k
R11 10k
+2V5
MCP3564
- FP: ok
- Sch:
MCU
U3
STM32F373CCT6
NRST
BOOT0
VREFSD+
VBAT
VDD
VDDA
VDDSD
VSS
VSSA
VSSSD
PA0
PA1
PA2
PA3
PA4
PA5
PA6
PA8
PA9
PA10
PA11
PA12
PA13
PA14
PA15
PB0
PB1
PB2
PB3
PB4
PB5
PB6
PB7
PB8
PB9
PB14
PB15
PF0
PF1
PF6
PF7
PE8
PE9
PD8
PC13
PC14
PC15
TIM14_CH1
TIM16_CH1
USART2_TX
USART2_RX
SPI1_CS
SPI1_SCK
SPI1_MISO
MEMS_OUT_EN
FCLK_X
FCLK_Y
SWDIO
SWCLK
SPI1_MOSI
SPI1_IRQ
LED2
LED1
TIM17_CH1
SPI2_CS
SPI2_MOSI
SPI2_SCK
RST
TP1
R20 10k
C19 12p
C20 12p
Crystal_GND24
Y1
BOOT1 BOOT0
x 0 flash memory
0 1 system memory
1 1 embedded SRAM
Analog
MCLK 4.9152 MHz generator
Tri-State
OUT
X1
ECS-2520MVLC-049-BN
MAX6070
- FP: ok
- Sch: ok
2.5V Reference
U2
MAX6070
IN
OUTF
OUTS
EN
GND
FILT
C22 100nF
C10 100nF
C11 100nF
2.5V ±2ppm/°C
Power
J2
Input Voltage
10.8 ... 13.2
+12V
U5
MPE1205S-1W
Vin
+Vo
0V
-Vo
C17 2u2 25V
C16 4u7 X7R
C7 100nF
C18 4u7
C8 100nF 16V X7R
-5V
MPE1205S-1W
Isol. DC/DC, THT, 1 W, +/-5 V, 100mA
U4
TC1108-3.3VDBTR
VI
VO
C21 4u7
FB1 150R
300mA out
VAA
C12 100nF
C13 100nF
C14 100nF
C15 100nF
MEMS Driver
add power switch for MEMS driver?
J6
Conn_02x05_Odd_Even
R19 10k
pinout see:
Mirrorcle BDQ PicoAmp 4.6 User Guide.pdf
Mechanical
H1 MountingHole_Pad
H2 MountingHole_Pad
H3 MountingHole_Pad
H4 MountingHole_Pad
H5 LogoFHNW
Simon Burkhardt
Université de Genève
FHNW ISE
University of Applied Sciences and Arts Northwestern Switzerland
School of Engineering
UNIVERSITÉ DE GENÈVE
Sheet: /
File: QSIT_PayloadADCboard.sch
Title: PSD and MEMS mirror control for QSIT payload
Size: A4
Date: 2021-11-26
Rev: 1
KiCad E.D.A. kicad (5.1.12)-1
Id: 1/1