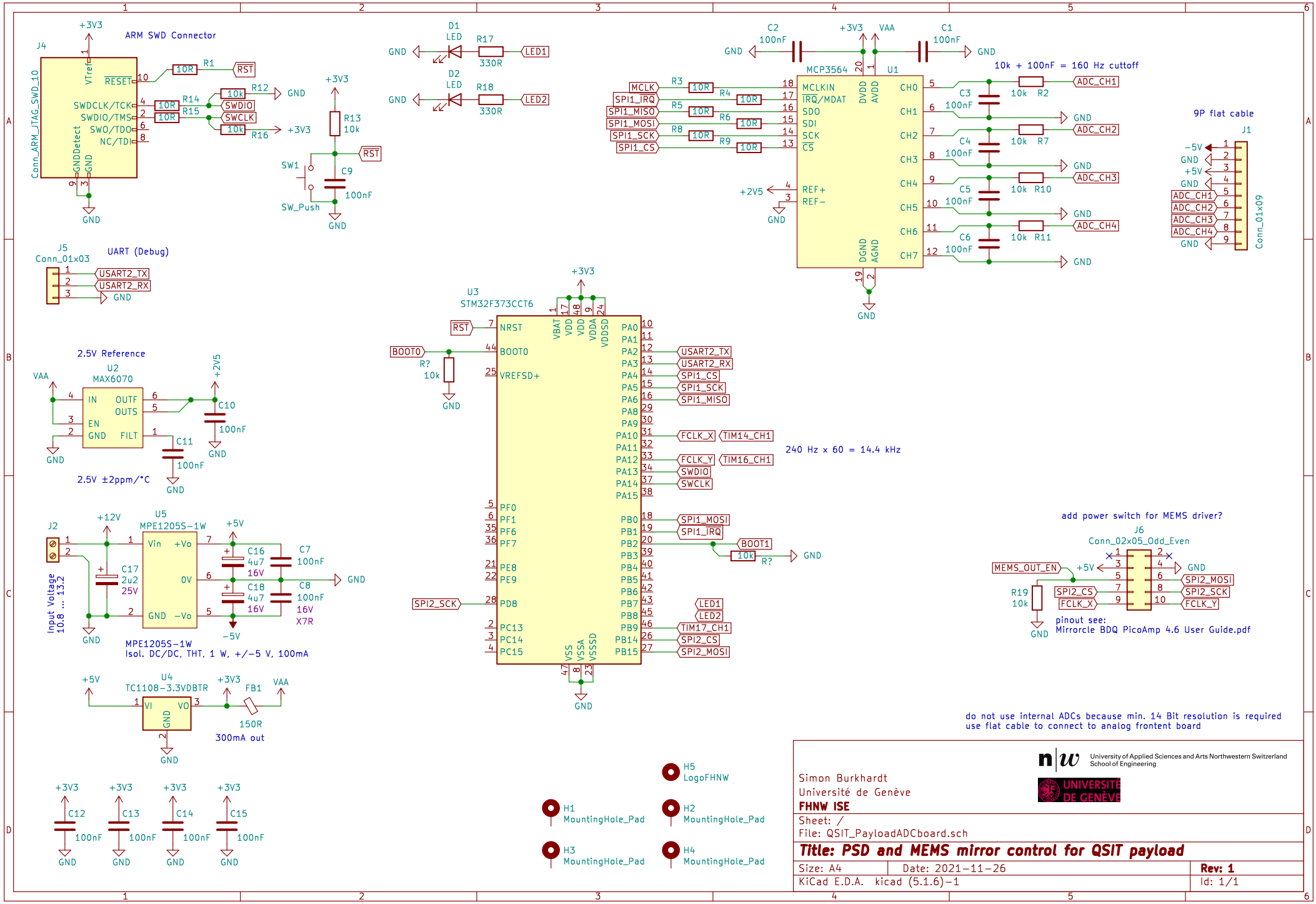
ARM SWD Connector
J4
Conn_ARM_JTAG_SWD_10
VTref
RESET
SWDCLK/TCK
SWDIO/TMS
SWO/TDO
NC/TDI
GNDDetect
GND
R1 10R
R12 10k
R14 10R
R15 10R
R16 10k
SWDIO
SWCLK
RST
R13 10k
SW1
SW_Push
C9 100nF
D1 LED
D2 LED
R17 330R
R18 330R
LED1
LED2
MCP3564
U1
MCLKIN
IRQ/MDAT
SDO
SDI
SCK
CS
REF+
REF−
DVDD
AVDD
DGND
AGND
CH0
CH1
CH2
CH3
CH4
CH5
CH6
CH7
C2 100nF
C1 100nF
C3 100nF
C4 100nF
C5 100nF
C6 100nF
10k + 100nF = 160 Hz cuttoff
R2 10k
R7 10k
R10 10k
R11 10k
ADC_CH1
ADC_CH2
ADC_CH3
ADC_CH4
MCLK
SPI1_IRQ
SPI1_MISO
SPI1_MOSI
SPI1_SCK
SPI1_CS
R3 10R
R4 10R
R5 10R
R6 10R
R8 10R
R9 10R
+2V5
9P flat cable
J1
Conn_01x09
J5
Conn_01x03
UART (Debug)
USART2_TX
USART2_RX
U3
STM32F373CCT6
NRST
BOOT0
VREFSD+
VBAT
VDD
VDDA
VDDSD
VSS
VSSA
VSSSD
PA0
PA1
PA2
PA3
PA4
PA5
PA6
PA8
PA9
PA10
PA11
PA12
PA13
PA14
PA15
PF0
PF1
PF6
PF7
PE8
PE9
PD8
PC13
PC14
PC15
PB0
PB1
PB2
PB3
PB4
PB5
PB6
PB7
PB8
PB9
PB14
PB15
FCLK_X
TIM14_CH1
FCLK_Y
TIM16_CH1
SWDIO
SWCLK
SPI1_MOSI
SPI1_IRQ
BOOT1
SPI2_SCK
LED1
LED2
TIM17_CH1
SPI2_CS
SPI2_MOSI
R? 10k
240 Hz x 60 = 14.4 kHz
2.5V Reference
U2
MAX6070
IN
OUTF
OUTS
EN
GND
FILT
C10 100nF
C11 100nF
2.5V ±2ppm/°C
J2
Input Voltage
10.8 ... 13.2
C17 2u2 25V
U5
MPE1205S−1W
Vin
+Vo
0V
−Vo
C16 4u7 16V
C18 4u7 16V
C7 100nF
C8 100nF 16V X7R
MPE1205S−1W
Isol. DC/DC, THT, 1 W, +/−5 V, 100mA
U4
TC1108−3.3VDBTR
VI
VO
FB1 150R
300mA out
C12 100nF
C13 100nF
C14 100nF
C15 100nF
H1 MountingHole_Pad
H2 MountingHole_Pad
H3 MountingHole_Pad
H4 MountingHole_Pad
H5 LogoFHNW
add power switch for MEMS driver?
J6
Conn_02x05_Odd_Even
MEMS_OUT_EN
R19 10k
SPI2_CS
FCLK_X
SPI2_MOSI
SPI2_SCK
FCLK_Y
pinout see:
Mirrorcle BDQ PicoAmp 4.6 User Guide.pdf
do not use internal ADCs because min. 14 Bit resolution is required
use flat cable to connect to analog frontent board
Simon Burkhardt
Université de Genève
FHNW ISE
University of Applied Sciences and Arts Northwestern Switzerland
School of Engineering
UNIVERSITÉ DE GENÈVE
Sheet: /
File: QSIT_PayloadADCboard.sch
Title: PSD and MEMS mirror control for QSIT payload
Size: A4
Date: 2021−11−26
Rev: 1
KiCad E.D.A. kicad (5.1.6)−1
Id: 1/1