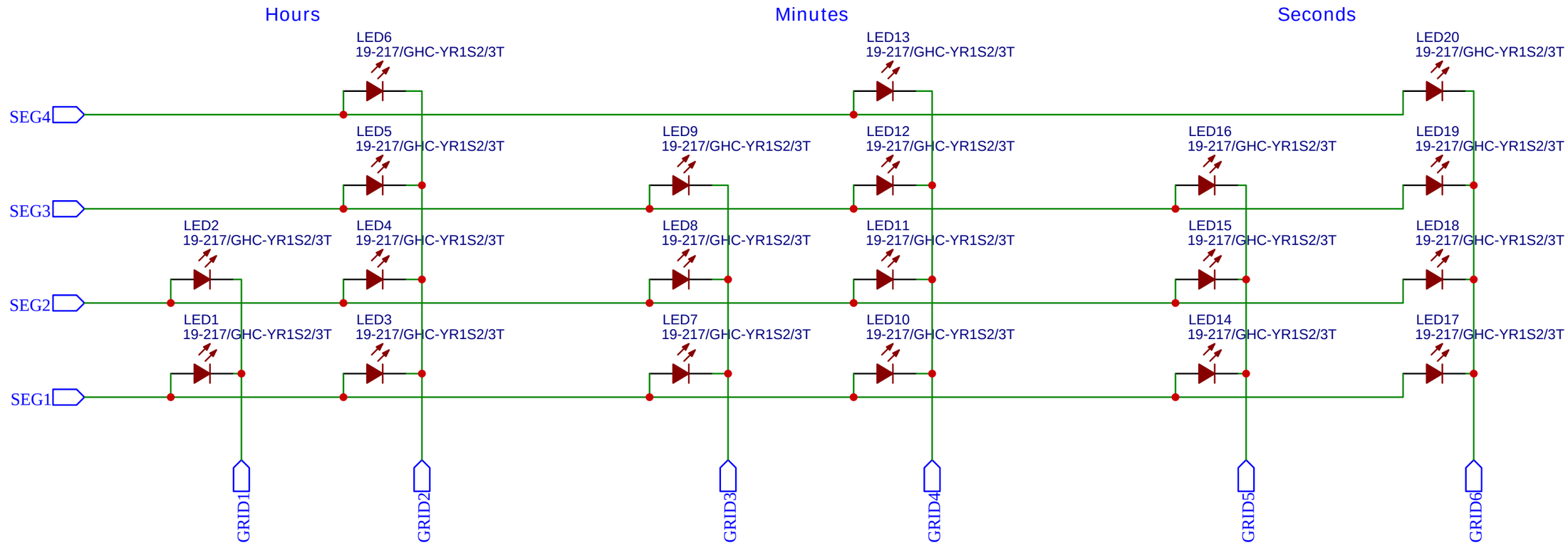

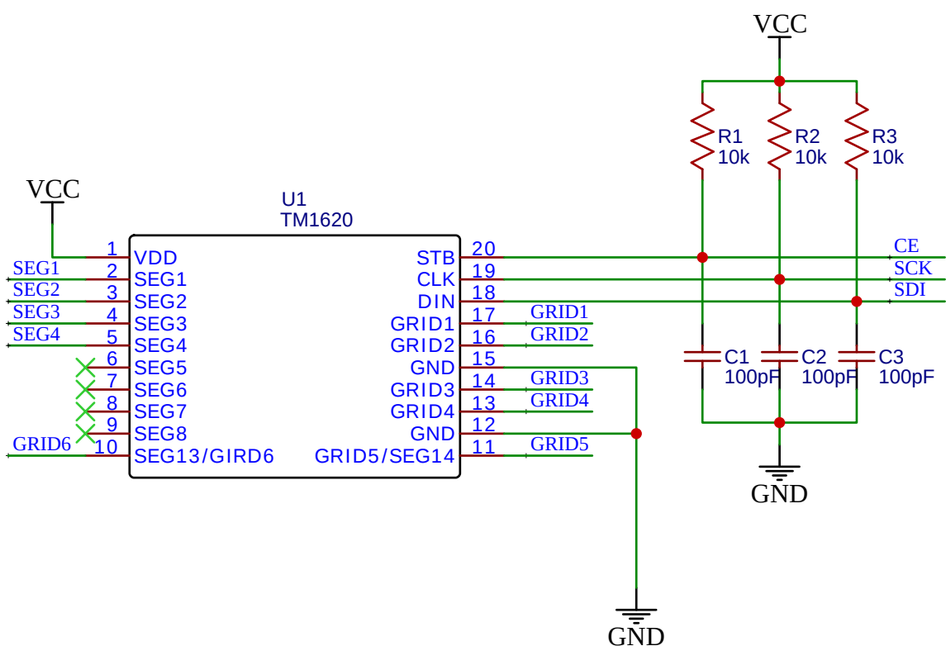

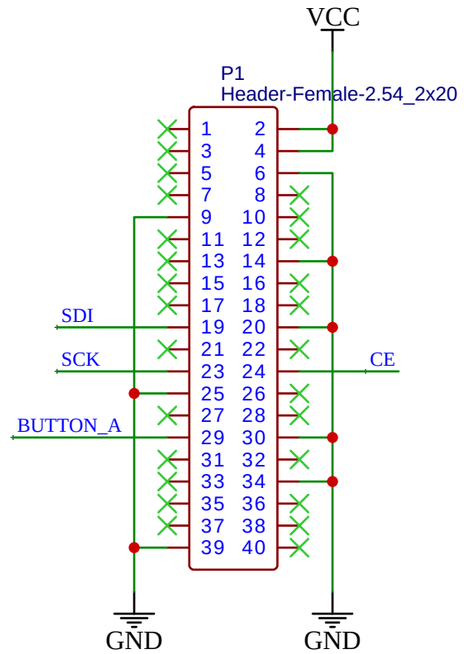

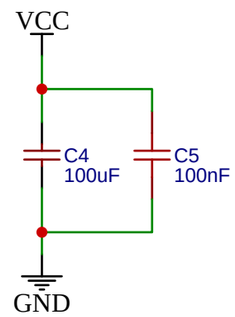

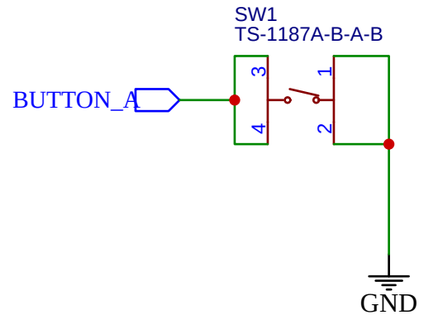

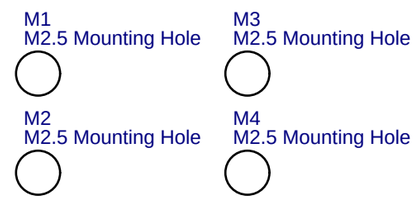

TITLE: Binary Clock	REV: 1.0
Company: Nerves Project	Sheet: 1/1
Date: 2022-01-07 Drawn By: fhunleth	

EasyEDA