Power Switch

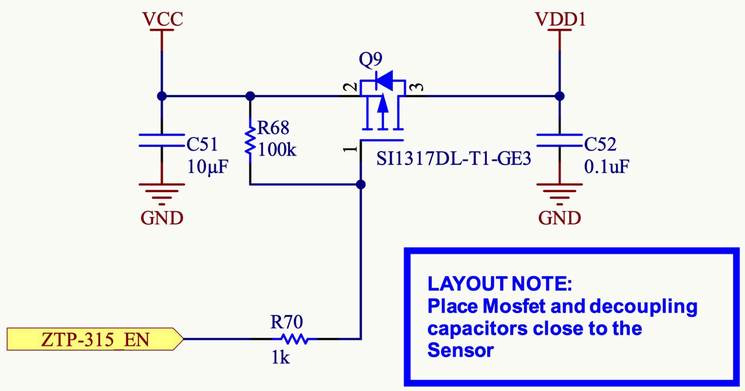

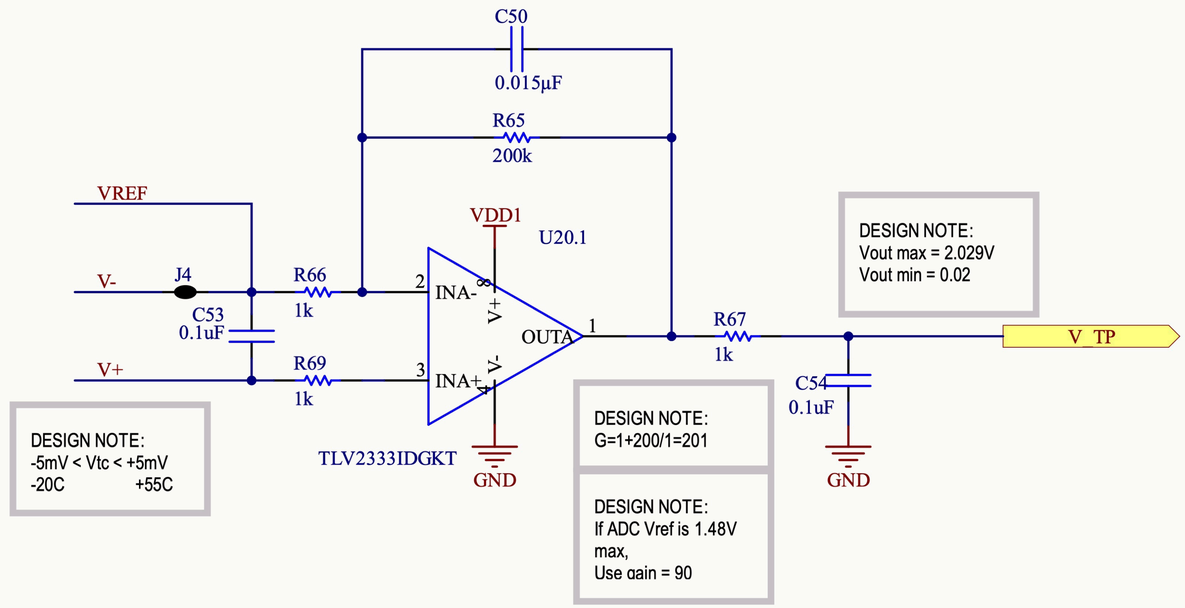

VREF IC

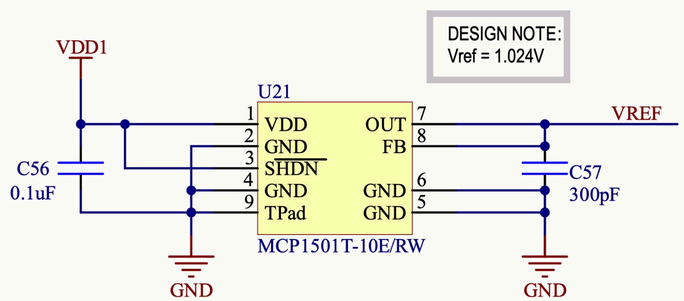

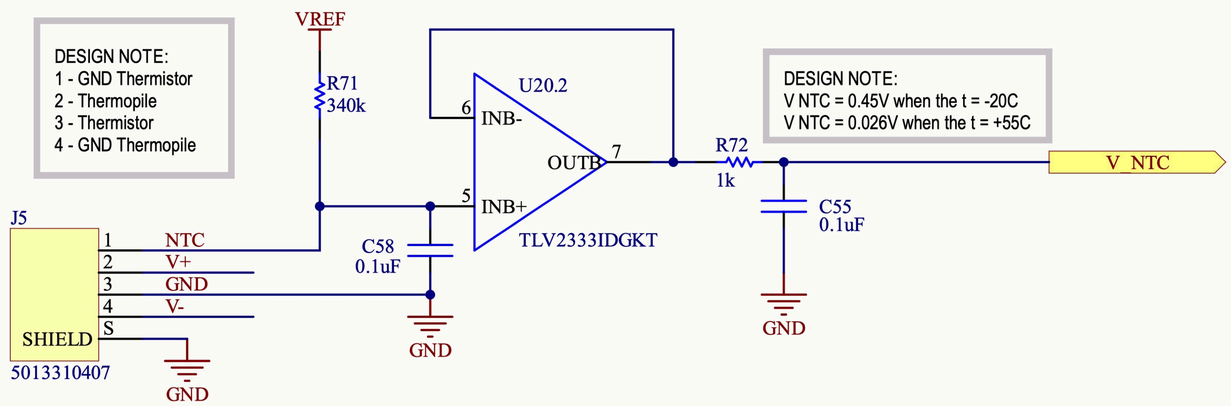

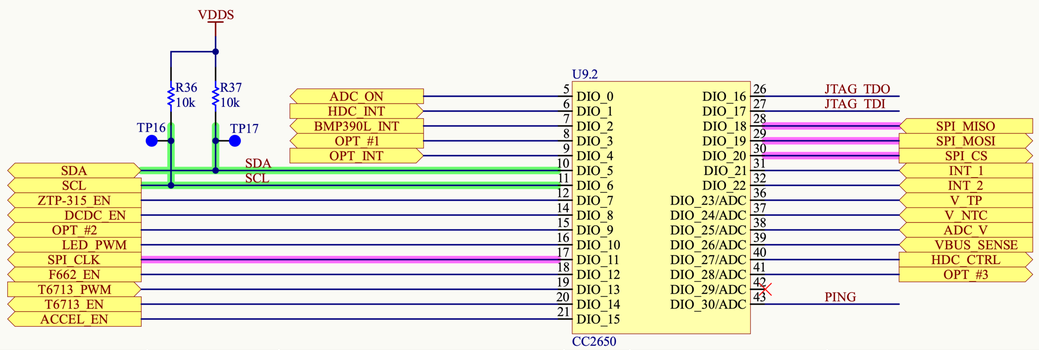

Project :	PLS001-SCH-001-R01		
File :	[9] ZTP_315.SchDoc		
Date :	13.08.2021	Rev:	1.0
Designed by :	Shvydko Artem	Sheet:	9 of 10

GlinTech
Innovative Technology