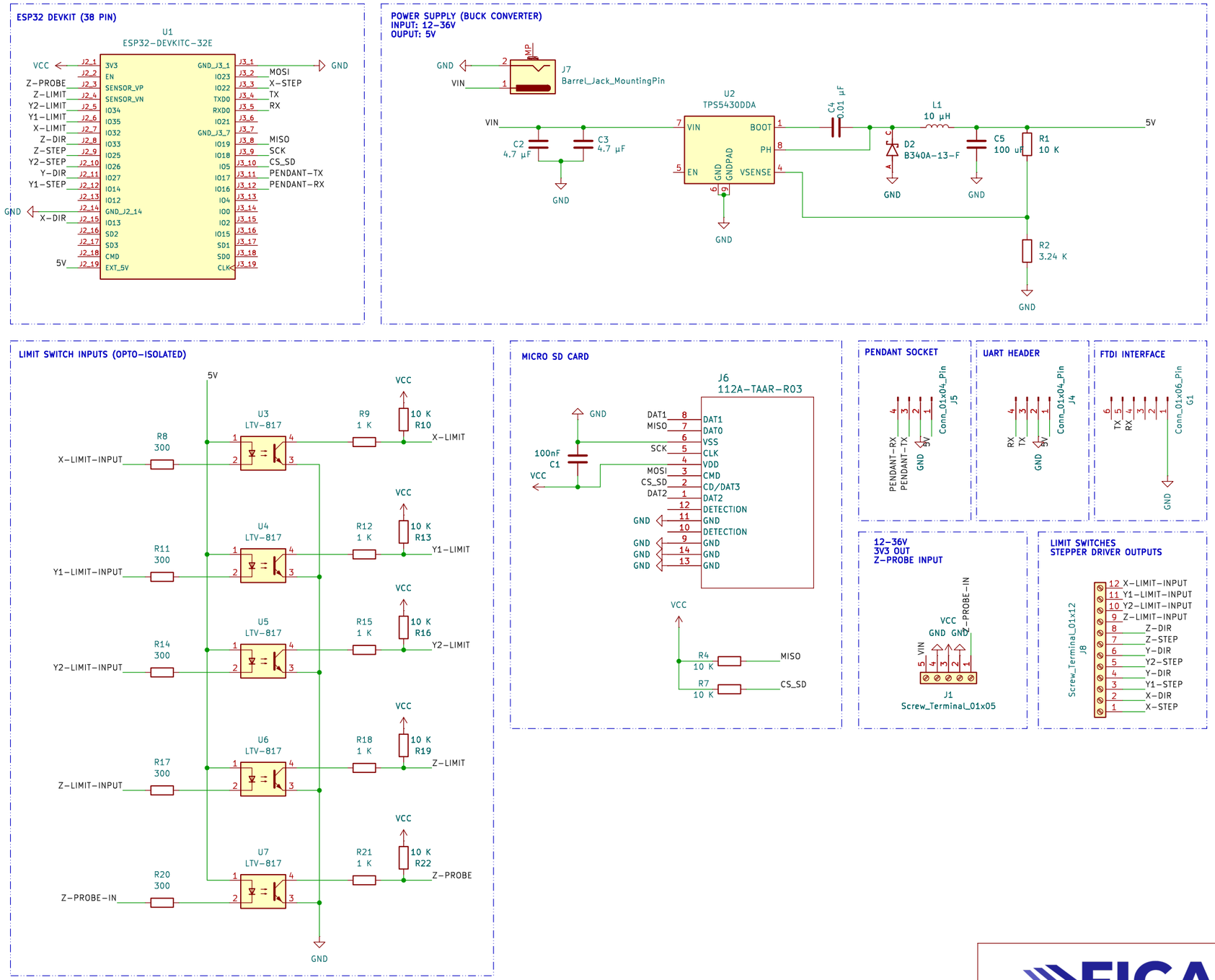

FIGAMORE

Sheet: /
File: FigCNC-NoSpindle.kicad_sch

Title: FigCNC – CNC Driver (No Spindle Control)

Size: A3	Date: Jan 20, 2026	Rev: 1.0
KiCad E.D.A. 9.0.6		Id: 1/1