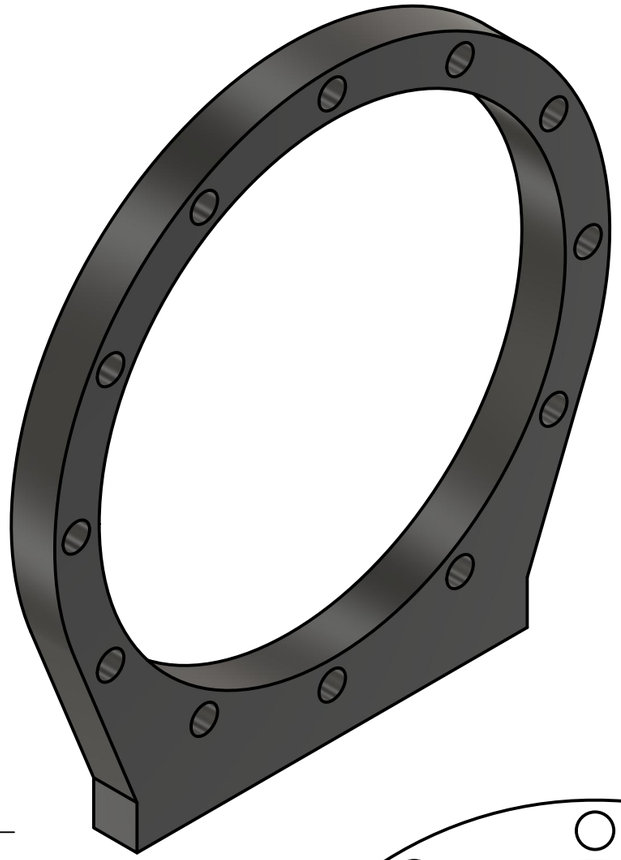

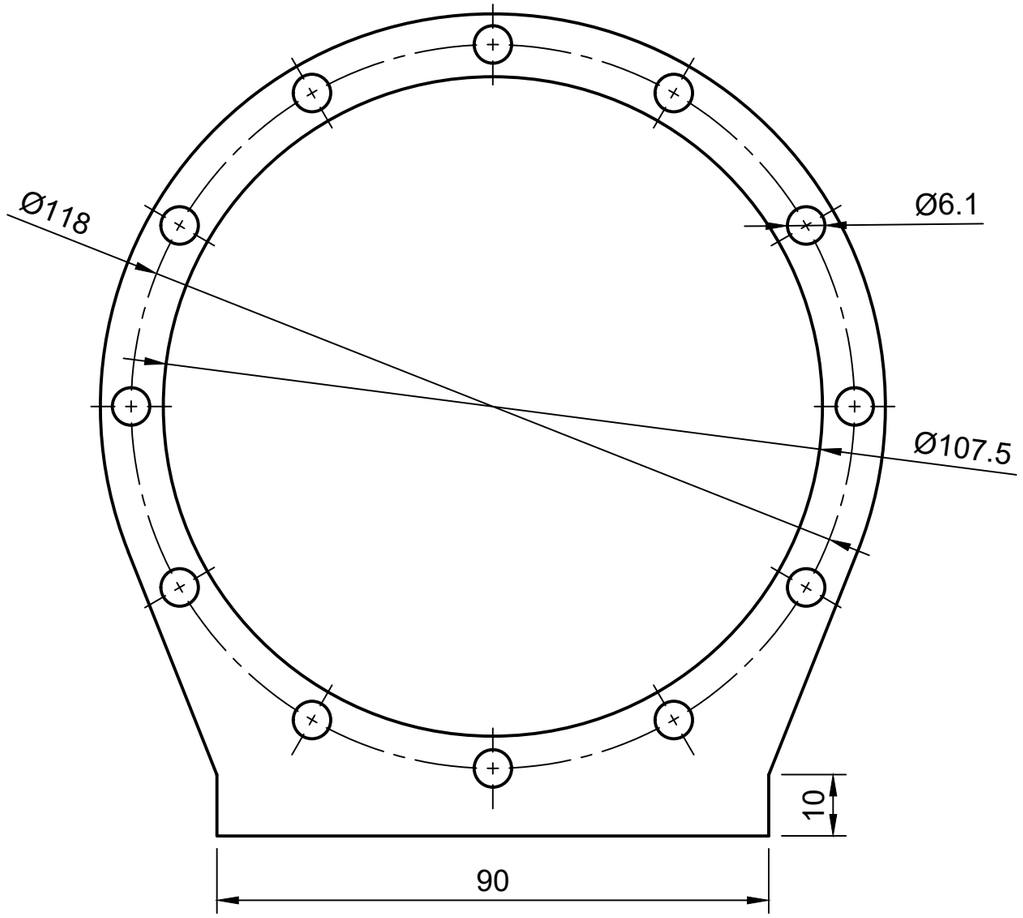

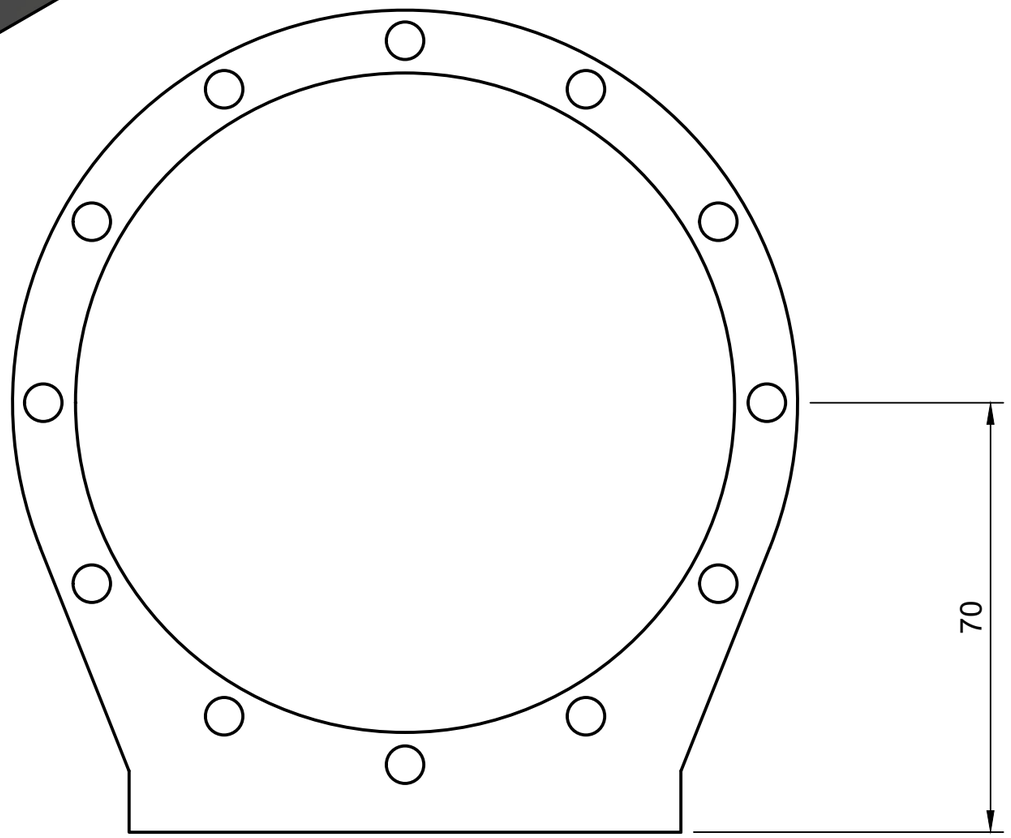

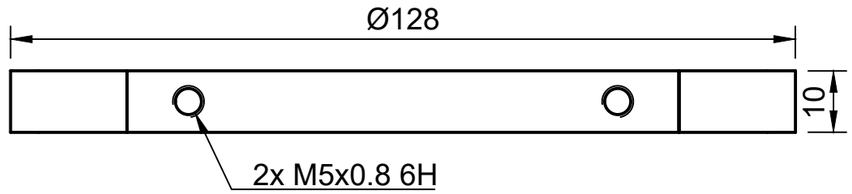

All units in mm, tolerance according to ISO 2768-MK

Dept.	Technical reference	Created by	Approved by
ENG	J3RA2	Félix Chenette-Stewart 2023-01-09	
		Document type	Document status: Ready for estimate
		Title: Right Arm 2 QTY: 1 MAT: ALU 6061	DWG No.: 2
			Rev.: 1 / Date of issue: / Sheet: 1/1