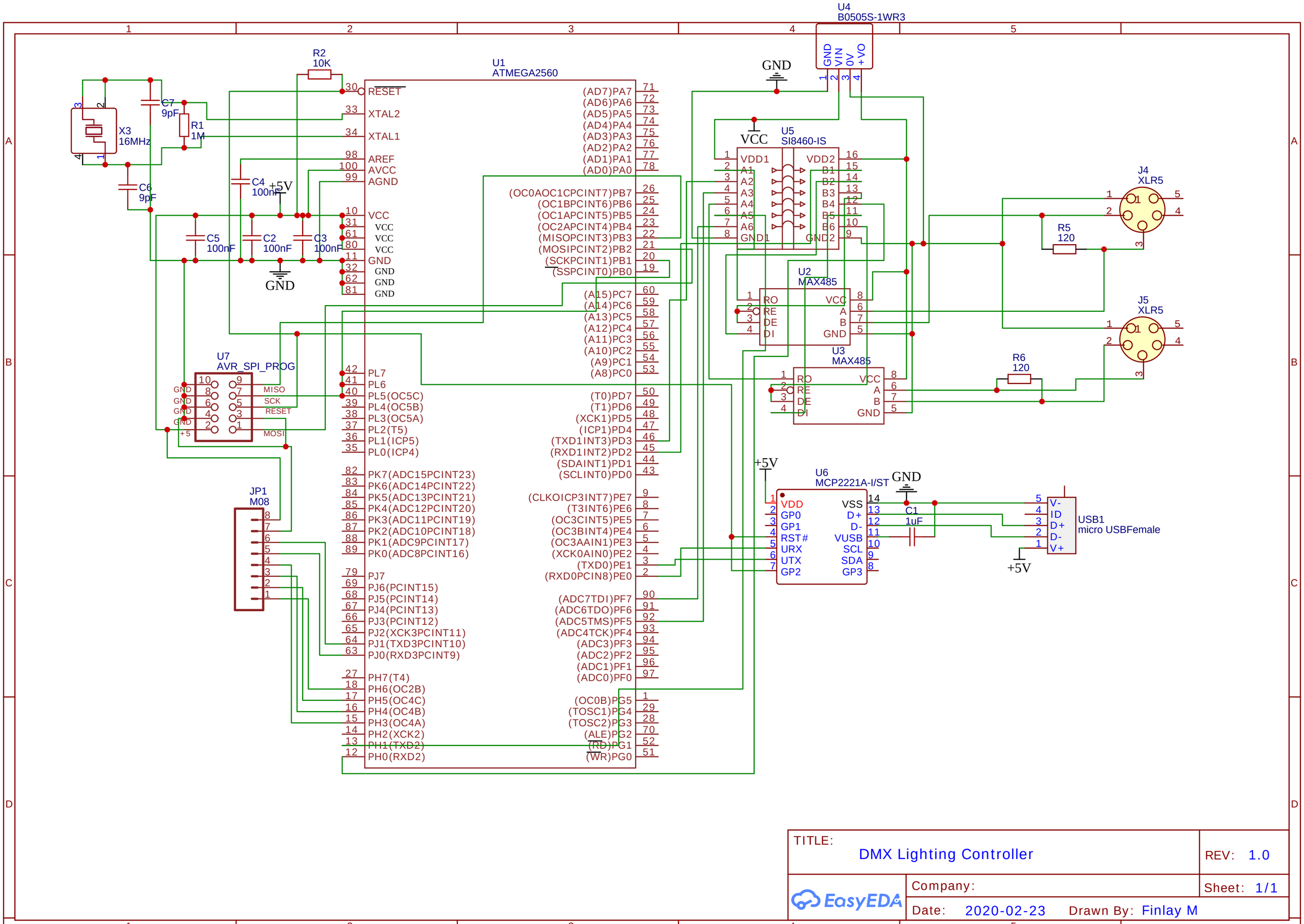

TITLE: DMX Lighting Controller	REV: 1.0
Company:	Sheet: 1/1
Date: 2020-02-23 Drawn By: Finlay M	