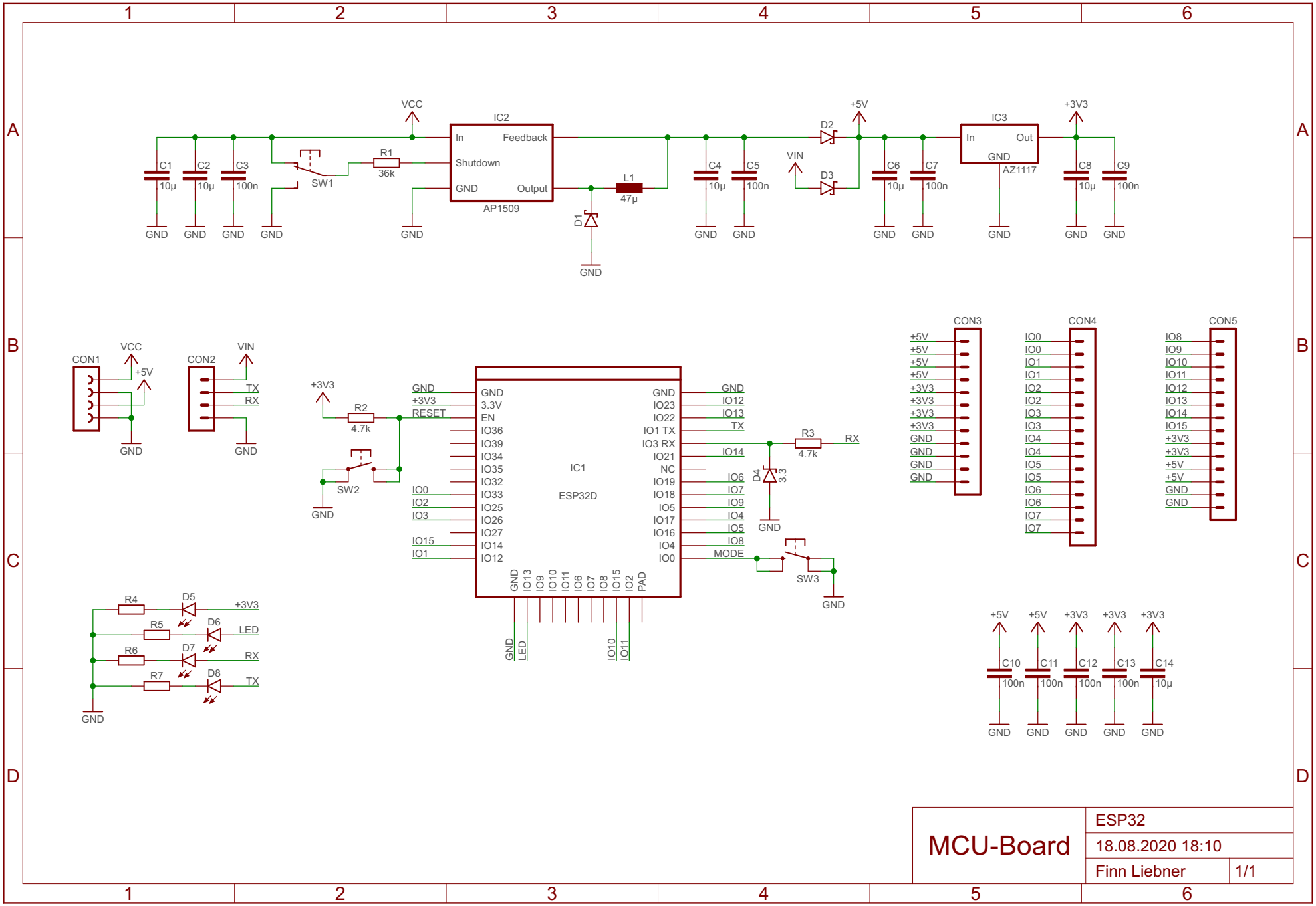

MCU-Board	ESP32	
	18.08.2020 18:10	
	Finn Liebner	1/1