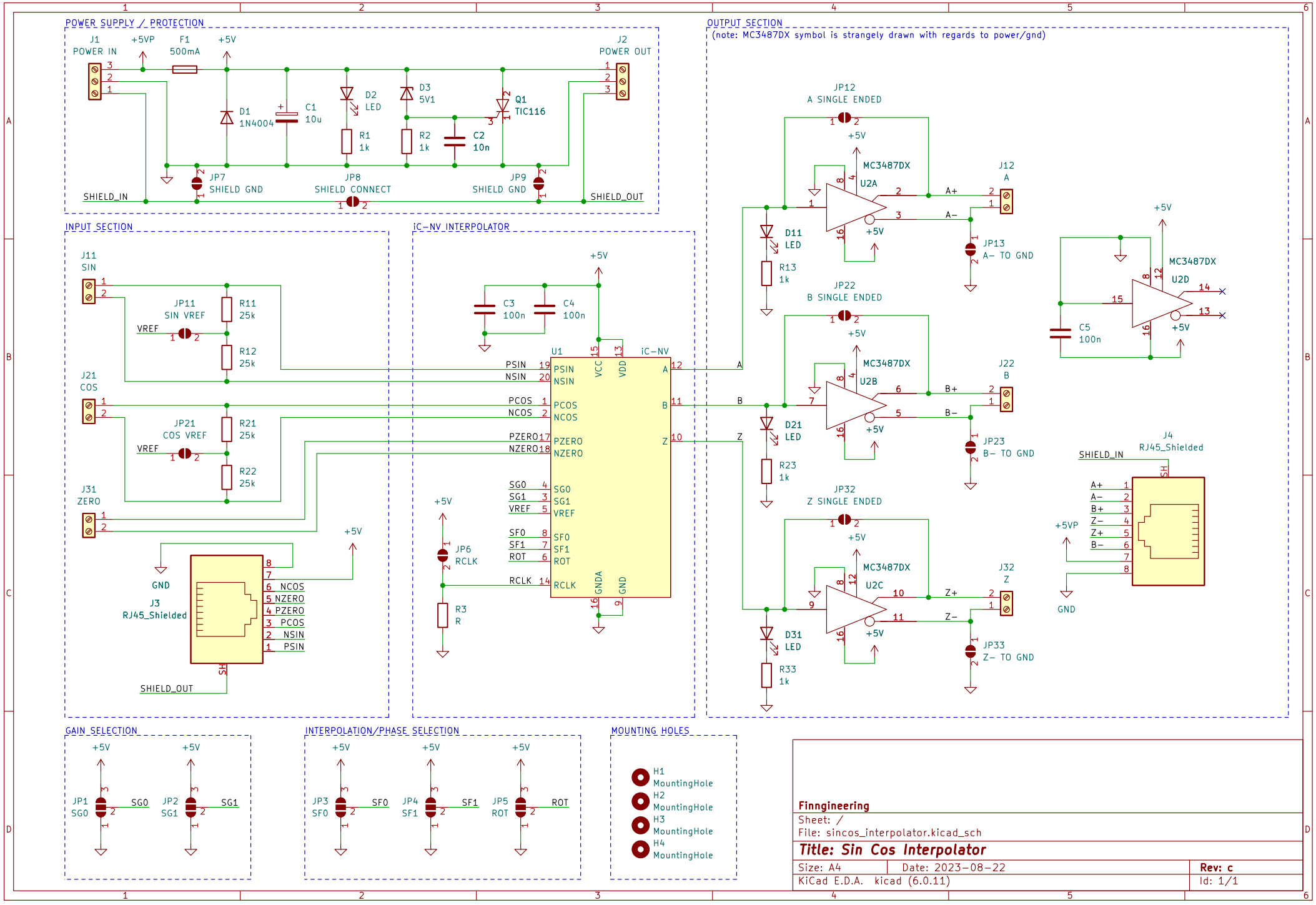

Finngineering

Sheet: /

File: sincos_interpolator.kicad_sch

Title: Sin Cos Interpolator

Size: A4	Date: 2023−08−22	Rev: c
KiCad E.D.A. kicad (6.0.11)		Id: 1/1