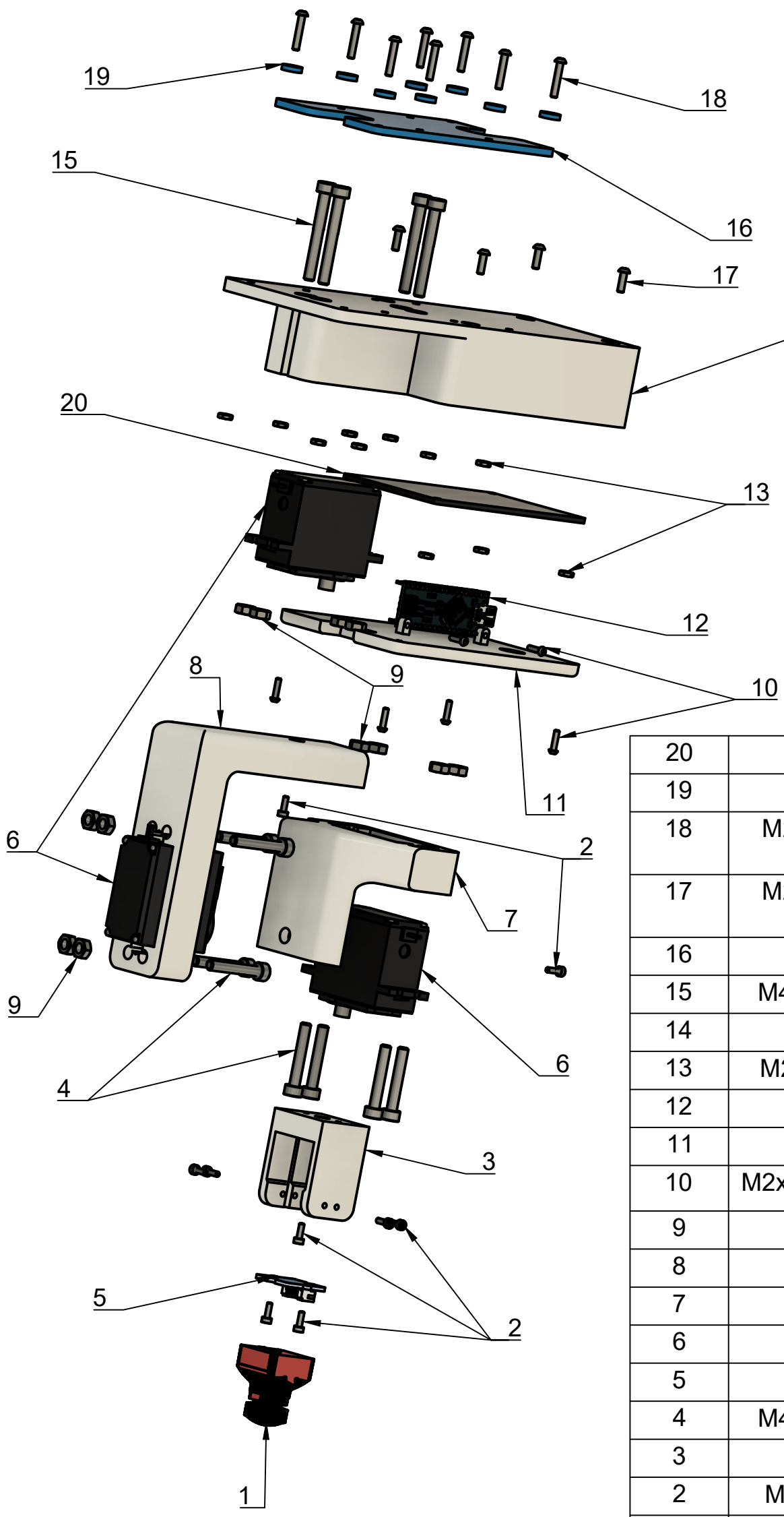

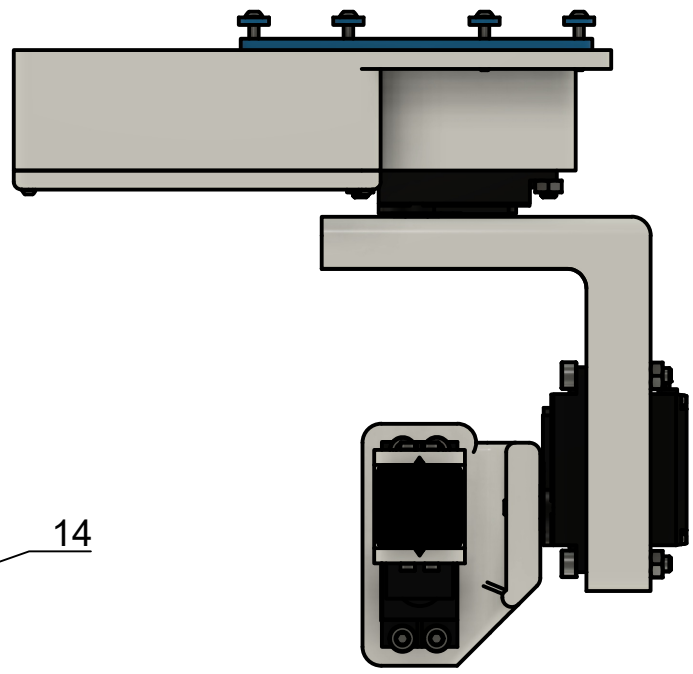

Part #	Name	Quantity
20	Motor Control Daughter Board	1
19	Silicone Vibration Dampeners	8
18	M2.5x0.45x8 Steel Button Head Hex Screw	8
17	M2.5x0.45x8 Steel Button Head Hex Screw	4
16	Silicone Anti Vibration Matt	1
15	M4x0.7x35 Steel Socket Head Screw	4
14	Gimbal Base	1
13	M2.5x0.45 Low Profile Steel Hex Nut	12
12	Arduino Nanno	1
11	Compartment Lid	1
10	M2x0.4x8 Steel Button Head Hex Screw	6
9	M4x0.7 Steel Hex Nut	12
8	Large Gimbal Arm	1
7	Small Gimbal Arm	1
6	FEETECH Servo FS5106R	3
5	LSM6DS3 6 axis acceleromiter	1
4	M4x0.7x25 Steel Socket Head Screw	8
3	End Effector Housing	1
2	M2x0.4x6 Steel Socket Head Screw	10
1	Foxeer T-Rex Mini Camera	1
Components		

Dept.	Technical reference	Created by: Gimbal team 6/5/2025	Approved by
		Document type: Assembly	Document status
		Title: Gimbal	DWG No.
			Rev. v2 / Date of issue / Sheet 1/1