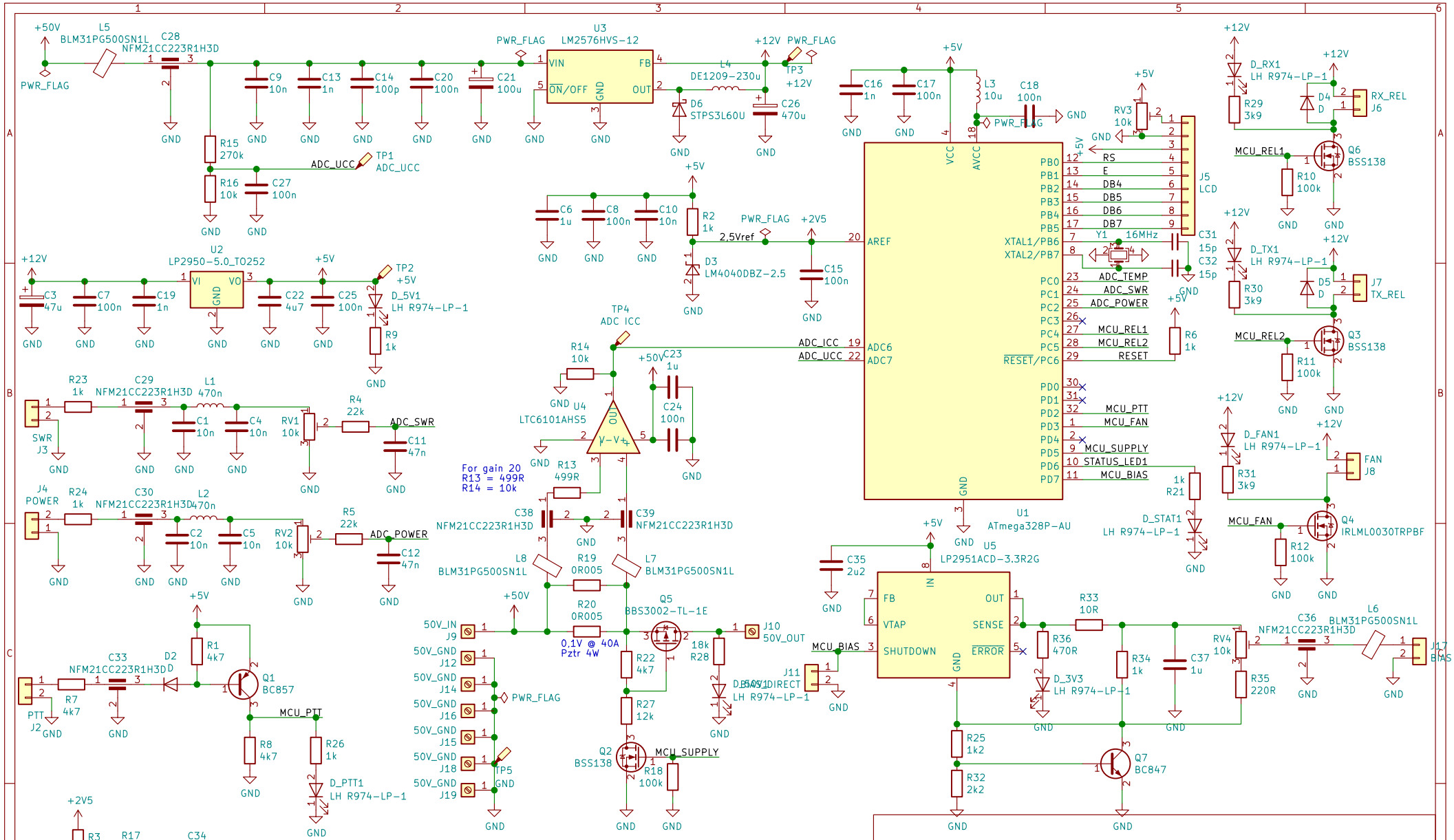
U3
LM2576HVS-12
VIN
FB
ON/OFF
GND
OUT
L4
DE1209-230u
D6
STPS3L60U
C26
470u
TP3
+12V
PWR_FLAG
L5
BLM31PG500SN1L
C28
NFM21CC223R1H3D
+50V
C9
10n
C13
1n
C14
100p
C20
100n
C21
100u
R15
270k
R16
10k
C27
100n
ADC_UCC
TP1
ADC_UCC
U2
LP2950-5.0_TO252
VI
VO
C3
47u
C7
100n
C19
1n
C22
4u7
C25
100n
+5V
TP2
D_5V1
LH R974-LP-1
R9
1k
C6
1u
C8
100n
C10
10n
R2
1k
D3
LM4040DBZ-2.5
2,5Vref
+2V5
C15
100n
C16
1n
C17
100n
L3
10u
C18
100n
AREF
VCC
AVCC
ADC6
ADC7
ADC_ICC
ADC_UCC
PB0
PB1
PB2
PB3
PB4
PB5
XTAL1/PB6
XTAL2/PB7
PC0
PC1
PC2
PC3
PC4
PC5
RESET/PC6
PD0
PD1
PD2
PD3
PD4
PD5
PD6
PD7
RS
E
DB4
DB5
DB6
DB7
Y1
16MHz
C31
15p
C32
15p
ADC_TEMP
ADC_SWR
ADC_POWER
MCU_REL1
MCU_REL2
RESET
MCU_PTT
MCU_FAN
MCU_SUPPLY
STATUS_LED1
MCU_BIAS
U1
ATmega328P-AU
J5
LCD
RV3
10k
R6
1k
R21
1k
D_STAT1
LH R974-LP-1
D_RX1
LH R974-LP-1
R29
3k9
D4
D
RX_REL
J6
MCU_REL1
Q6
BSS138
R10
100k
D_TX1
LH R974-LP-1
R30
3k9
D5
D
TX_REL
J7
MCU_REL2
Q3
BSS138
R11
100k
D_FAN1
LH R974-LP-1
R31
3k9
FAN
J8
MCU_FAN
Q4
IRLML0030TRPBF
R12
100k
TP4
ADC ICC
R14
10k
C23
1u
C24
100n
U4
LTC6101AHS5
OUT
V-
V+
R13
499R
For gain 20
R13 = 499R
R14 = 10k
SWR
J3
R23
1k
C29
NFM21CC223R1H3D
L1
470n
C1
10n
C4
10n
RV1
10k
R4
22k
ADC_SWR
C11
47n
J4
POWER
R24
1k
C30
NFM21CC223R1H3D
L2
470n
C2
10n
C5
10n
RV2
10k
R5
22k
ADC_POWER
C12
47n
C38
NFM21CC223R1H3D
C39
NFM21CC223R1H3D
L8
BLM31PG500SN1L
L7
BLM31PG500SN1L
R19
0R005
R20
0R005
0,1V @ 40A
Pztr 4W
Q5
BBS3002-TL-1E
J10
50V_OUT
18k
R28
D_50V1
LH R974-LP-1
J11
50V_DIRECT
50V_IN
J9
50V_GND
J12
J14
J16
J15
J18
J19
PWR_FLAG
TP5
R22
4k7
R27
12k
Q2
BSS138
MCU_SUPPLY
R18
100k
C35
2u2
U5
LP2951ACD-3.3R2G
FB
VTAP
SHUTDOWN
IN
OUT
SENSE
ERROR
MCU_BIAS
R33
10R
R36
470R
D_3V3
LH R974-LP-1
R34
1k
C37
1u
RV4
10k
R35
220R
C36
NFM21CC223R1H3D
L6
BLM31PG500SN1L
J17
BIAS
R25
1k2
R32
2k2
Q7
BC847
PTT
J2
R7
4k7
C33
NFM21CC223R1H3D
D2
D
R1
4k7
Q1
BC857
R8
4k7
MCU_PTT
R26
1k
D_PTT1
LH R974-LP-1
J13
TERMISTOR
R3
10k
R17
22k
NFM21CC223R1H3D
C34
ADC_TEMP
J1
AVR_ISP_01X06
VTG
GND
SCK
RST
MISO
MOSI
DB5
DB6
DB7
RESET
Sheet: /
File: sekvencer_v0.01.sch
Title:
Size: A4
Date:
Rev:
KiCad E.D.A. kicad (5.0.0-rc2-dev-378-g94dbcc719)
Id: 1/1