PROIECT SCIA

Student: Fit Nicolae Sebastian
Grupa: 2233

Tema: Filtru Trece-Banda de Ordin 4 (Filtru Trece-Jos de Ordin 2 si Filtru Trece-Sus de Ordin 2 , Audio, Frecvente Inalte(4,5kHz, 500HZ)

Tip raspuns filtru: CEBASEV

Topologia primei celule: Biquad Sallen-Key

Topologia celulei a doua: Biquad Kerwin-Huelsman-Newcomb

Extragerea pozitiilor polilor(coeficientii filtrului)

Am folosit tabelul din documentatia de pe Teams:
Analog Devices Teaching Material -> Linear Circuits Design Handbook
Analog Filters
Op_Amps_Everyone

Table 16–9. Tschebyscheff Coefficients for 3-dB Passband Ripple

n	i	a_i	b_i	$k_i = f_{Ci} / f_C$	Q_i
1	1	1.0000	0.0000	1.000	—
2	1	1.0650	1.9305	1.000	1.30
3	1	3.3496	0.0000	0.299	—
	2	0.3559	1.1923	1.396	3.07
4	1	2.1853	5.5339	0.557	1.08
	2	0.1964	1.2009	1.410	5.58
5	1	5.6334	0.0000	0.178	—
	2	0.7620	2.6530	0.917	2.14
	3	0.1172	1.0686	1.500	8.82
6	1	3.2721	11.6773	0.379	1.04
	2	0.4077	1.9873	1.086	3.46
	3	0.0815	1.0861	1.489	12.78
7	1	7.9064	0.0000	0.126	—
	2	1.1159	4.8963	0.670	1.98
	3	0.2515	1.5944	1.222	5.02
	4	0.0582	1.0348	1.527	17.46
8	1	4.3583	20.2948	0.286	1.03
	2	0.5791	3.1808	0.855	3.08
	3	0.1765	1.4507	1.285	6.83
	4	0.0448	1.0478	1.517	22.87
9	1	10.1759	0.0000	0.098	—

Proiect SCIA

Filtru TB Audio

1. Biquad TS (GR1: 300 Hz, GR2: 400 Hz, GR3: 500 Hz)

2. Biquad TJ (GR1: 3,5 kHz, GR2: 4 kHz, GR3: 4,5 kHz)

Câștig, tiplu de 3 dB

Biquad Sallen-Key + Biquad Kerwin - Huelsman - Newcomb (KHN)

Numele începe cu consoană, alegem ai și bi

Avem ordin n=2 la TJ: $a_1 = 1,065$, $b_1 = 1,9305$

$$H_i(s) = \frac{H_{i0}}{H a_i s + b_i s^2} \Rightarrow$$

$$\Rightarrow a_i^2 - 4b_i^2 = 1,13 - 4 \cdot 3,72 < 0$$

$$\Rightarrow b_i s^2 + a_i s + 1 = 0 \Rightarrow s_{1,2} = \frac{-a_i \pm \sqrt{a_i^2 - 4b_i}}{2b_i} \Rightarrow$$

$$\Rightarrow s_{1,2} = RE_i \pm j\,JM_i$$

$$\Rightarrow \begin{cases} Re_2 = -\frac{a_i}{2b_i} = -\frac{1,065}{2 \cdot 1,9305} = -0,275 \\ Jm_2 = \frac{\sqrt{4b_1 - a_i^2}}{2b_1} = \frac{\sqrt{7,722 - 1,134}}{3,861} = \frac{2,566}{3,861} \end{cases}$$

$= 0,664$ $\quad \omega_{02} = 2\pi f_{02}^* = 20\,290,62$ rad/s

$$\omega_{02} = \sqrt{0,0756 + 0,4409} = 0,718 \text{ rad/s}$$

$$Q = \frac{0,718}{2 \cdot 0,275} = 1,305 \quad f_{02}^* = f_{02} \cdot f_c = 0,718 \cdot 500 = 3231 \text{ Hz}$$

Implementare:
f01=w01
f02=w02

Pt. TS transformăm polii

$$RE_{TS} = \frac{RE_{TJ}}{RE_{TJ}^2 + JM_{TJ}^2}$$

$$JM_{TS} = \frac{JM_{TJ}}{RE_{TJ}^2 + JM_{TJ}^2}$$

$$RE_{1TS} = \frac{-0,275}{0,0756 + 0,4409} = -0,532$$

$$JM_{1TS} = \frac{0,664}{0,0756 + 0,4409} = 1,285$$

$$\omega_{01} = \sqrt{RE_{1TS}^2 + JM_{1TS}^2} = 1,391 \text{ rad/s}$$

$$f_{01}^* = 1,391 \cdot 500 = 695,5 \text{ Hz}$$

$$Q = \frac{\omega_{01}}{2Re} = \frac{1,391}{2 \cdot 0,532} = 1,307$$

$$\omega_{01} = 2\pi \cdot f_{01}^* = 4367,7 \text{ rad/s}$$

Caracteristica de transfer a filtrului comparat cu Butterworth

Circuitul folosit pentru comparare

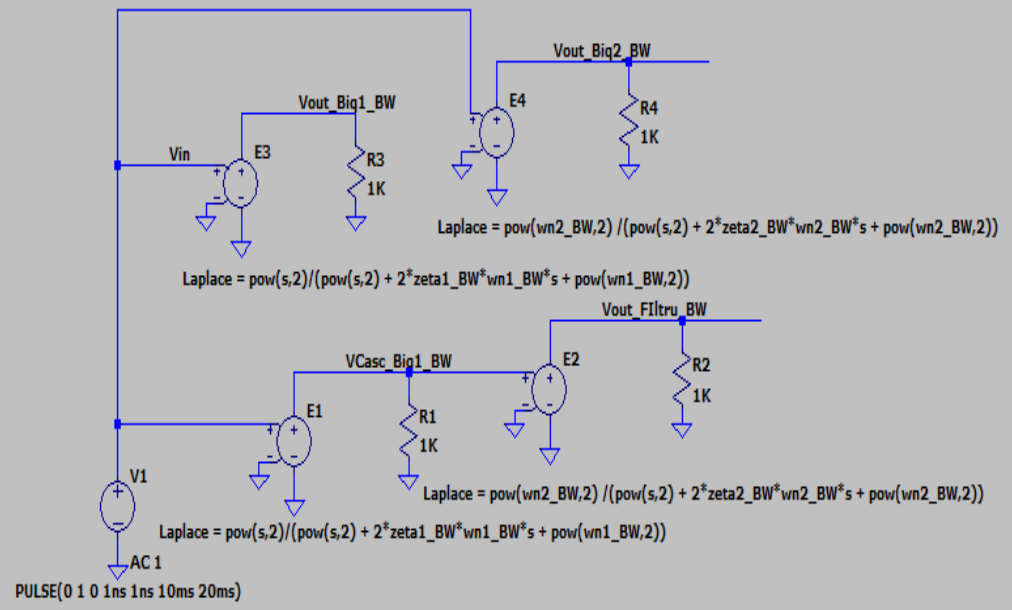

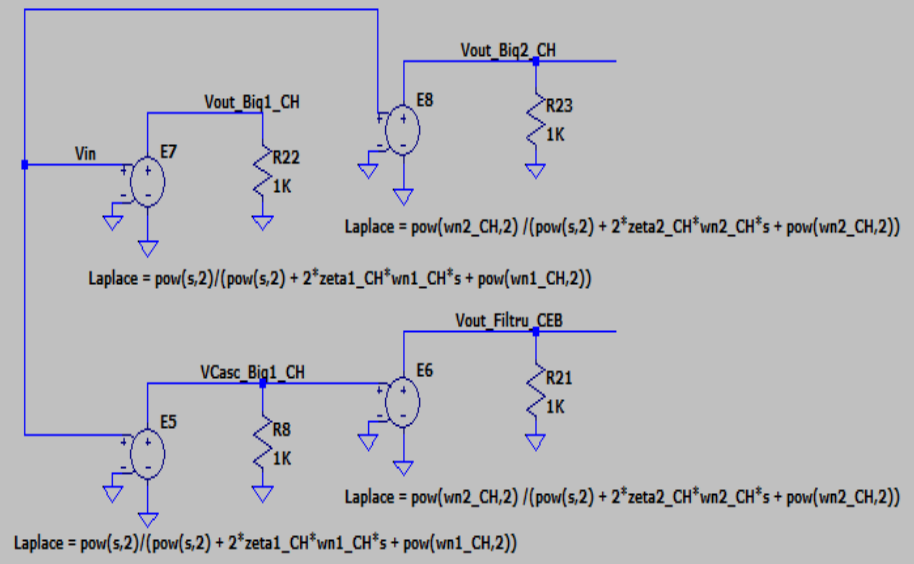

.ac dec 300 0.01 300K

Lowpass: Laplace = pow(wn,2)/(pow(s,2) + 2*zeta*wn*s + pow(wn,2))
HighPass: Laplace = pow(s,2) / (pow(s,2) + 2*zeta*wn*s + pow(wn,2))

.tran 60m

Butterworth 2nd order coefficients

Fc = 1Hz

Biquad 1		Biquad 2	
.param fn1_BW=1	Natural frequency (Hz)	.param fn2_BW=1	Natural frequency (Hz)
.param wn1_BW = 2*pi*fn1_BW	Natural frequency (Radians)	.param wn2_BW = 2*pi*fn2_BW	Natural frequency (Radians)
.param Q1_BW = 0.71	Quality Factor	.param Q2_BW = 0.71	Quality Factor
.param zeta1_BW=1/(2*Q1_BW)	Damping Coefficient	.param zeta2_BW=1/(2*Q2_BW)	Damping Coefficient

Lowpass: Laplace = pow(wn,2)/(pow(s,2) + 2*zeta*wn*s + pow(wn,2))
HighPass: Laplace = pow(s,2) / (pow(s,2) + 2*zeta*wn*s + pow(wn,2))

Chebyshev 2nd order coefficients

Fc = 1 Hz

Biquad 1		Biquad 2	
.param fn1_CH = 1.391	Natural frequency (Hz)	.param fn2_CH = 0.718	Natural frequency (Hz)
.param wn1_CH = 2*pi*fn1_CH	Natural frequency (Radians)	.param wn2_CH = 2*pi*fn2_CH	Natural frequency (Radians)
.param Q1_CH = 1.307	Quality Factor	.param Q2_CH= 1.305	Quality Factor
.param zeta1_CH=1/(2*Q1_CH)	Damping Coefficient	.param zeta2_CH=1/(2*Q2_CH)	Damping Coefficient

Caracteristica de transfer a filtrului comparat cu Butterworth Fc=1Hz (FTJ)

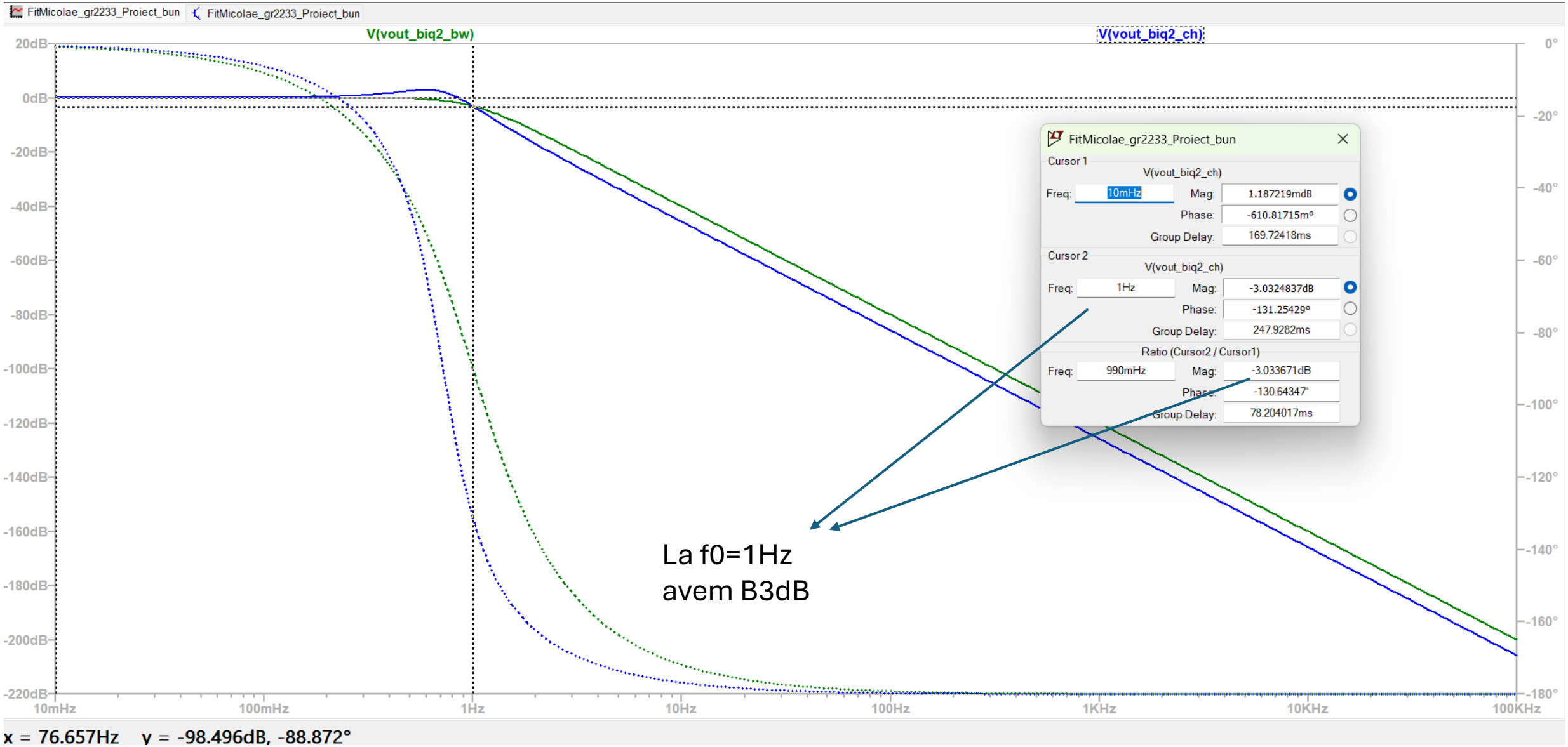

Caracteristica de transfer a filtrului comparat cu Butterworth Fc=1Hz (FTS)

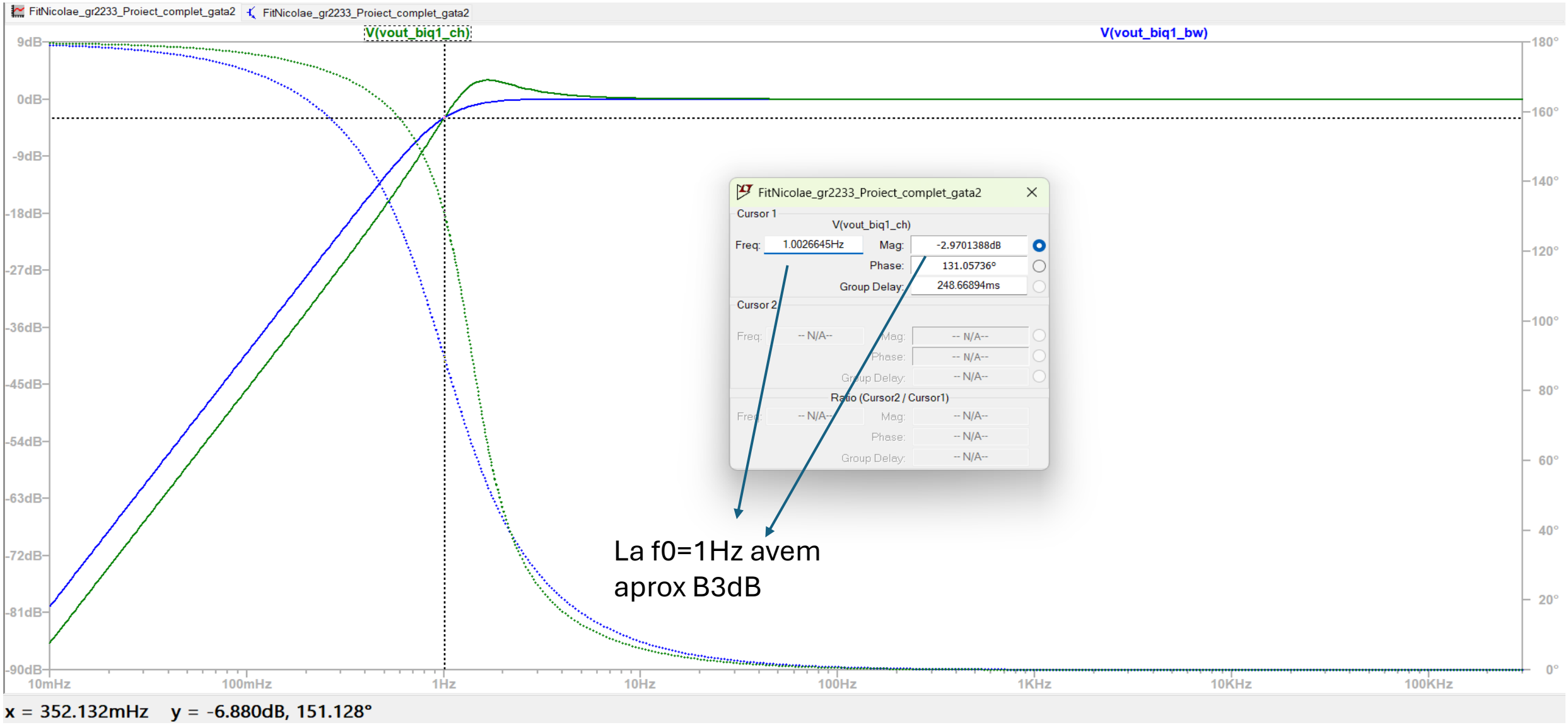

Denormarea la 4,5kHz si 500HZ

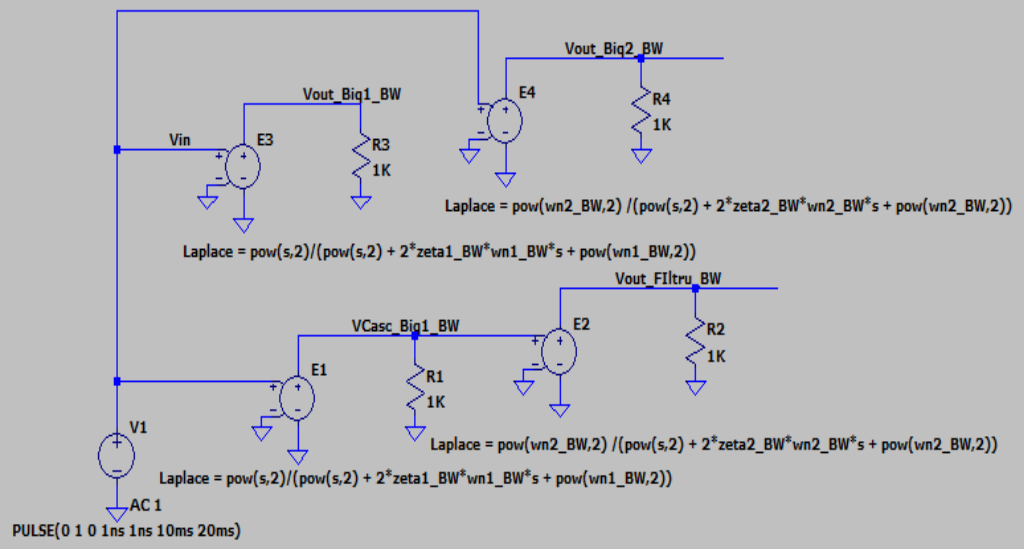

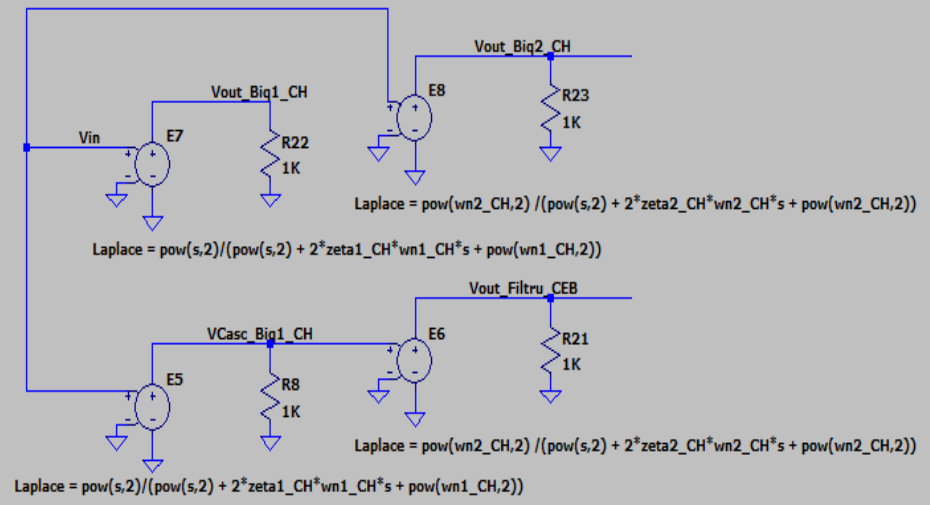

.ac dec 300 0.01 300K

Lowpass: Laplace = pow(wn,2)/(pow(s,2) + 2*zeta*wn*s + pow(wn,2))
HighPass: Laplace = pow(s,2) / (pow(s,2) + 2*zeta*wn*s + pow(wn,2))

.tran 60m

Butterworth 2nd order coefficients

Fc = 1Hz

Biquad 1		Biquad 2	
.param fn1_BW=500	Natural frequency (Hz)	.param fn2_BW=4500	Natural frequency (Hz)
.param wn1_BW = 2*pi*fn1_BW	Natural frequency (Radians)	.param wn2_BW = 2*pi*fn2_BW	Natural frequency (Radians)
.param Q1_BW = 0.71	Quality Factor	.param Q2_BW = 0.71	Quality Factor
.param zeta1_BW=1/(2*Q1_BW)	Damping Coefficient	.param zeta2_BW=1/(2*Q2_BW)	Damping Coefficient

Lowpass: Laplace = pow(wn,2)/(pow(s,2) + 2*zeta*wn*s + pow(wn,2))
HighPass: Laplace = pow(s,2) / (pow(s,2) + 2*zeta*wn*s + pow(wn,2))

Chebyshev 2nd order coefficients

Fc = 1 Hz

Biquad 1		Biquad 2	
.param fn1_CH = 695.5	Natural frequency (Hz)	.param fn2_CH = 3231	Natural frequency (Hz)
.param wn1_CH = 2*pi*fn1_CH	Natural frequency (Radians)	.param wn2_CH = 2*pi*fn2_CH	Natural frequency (Radians)
.param Q1_CH = 1.306	Quality Factor	.param Q2_CH= 1.307	Quality Factor
.param zeta1_CH=1/(2*Q1_CH)	Damping Coefficient	.param zeta2_CH=1/(2*Q2_CH)	Damping Coefficient

F1=500*f01=4k*0.1,391=695,5Hz

F2=4,5k*f02=4,5k*0.718=3231Hz

Denormarea la 4.5kHz si 500HZ

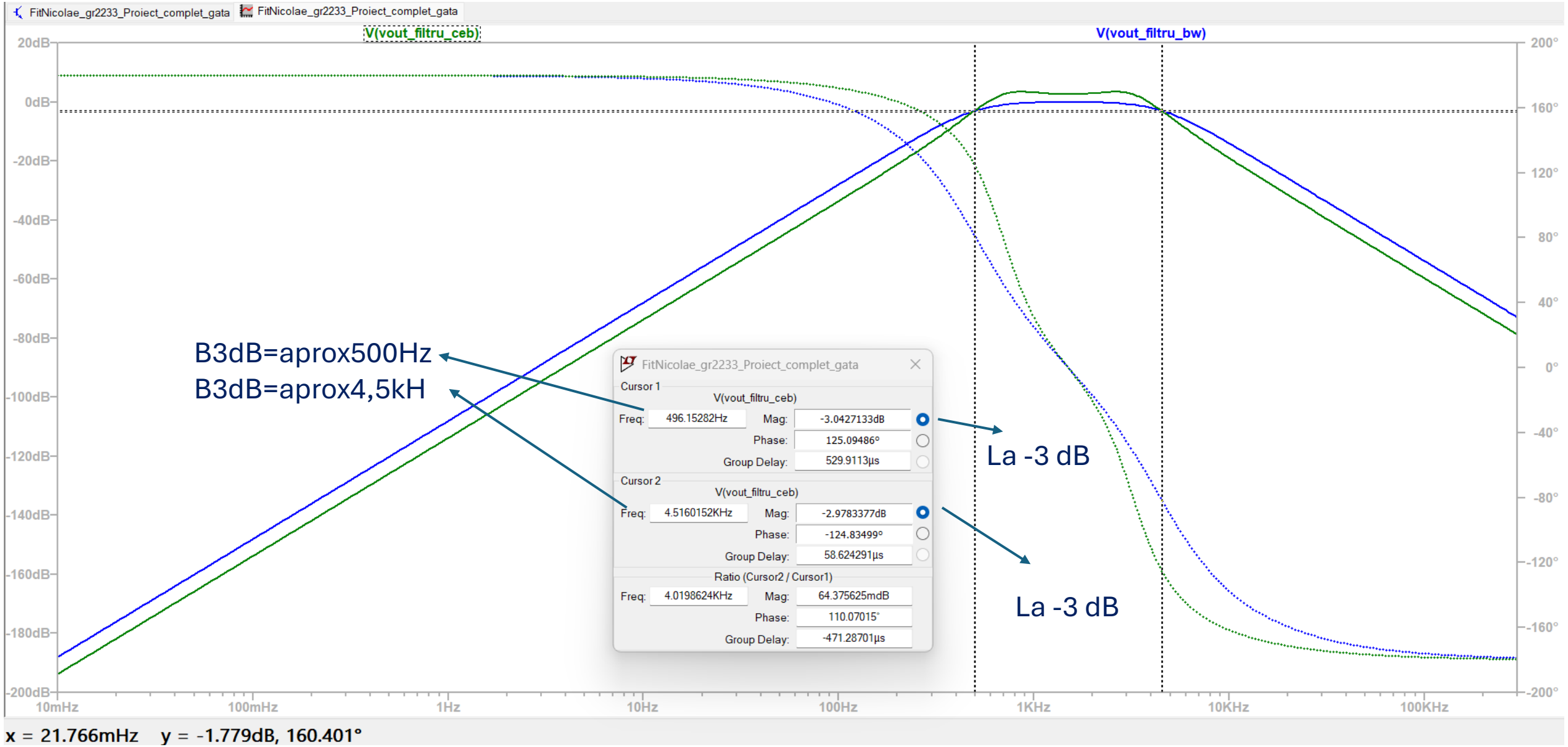

Topologia primei celule: Biquad Sallen-Key(s)-TJ

* Structura Sallen-Key-TJ *

$$\frac{V_{in}-V_A}{Z_1} = \frac{V_A-V_{out}}{Z_2} + \frac{V_A-V_{out}}{Z_3}$$

$$\boxed{V_{out} = V_A\left(\frac{Z_4}{Z_2+Z_4}\right) \Rightarrow V_A = V_{out}\left(1+\frac{Z_2}{Z_4}\right)}$$

$$Z_2Z_3(V_{in}-V_A) = Z_1Z_3(V_A-V_{out}) + Z_1Z_2(V_A-V_{out})$$

$$Z_2Z_3V_{in} - Z_2Z_3V_A = Z_1Z_3V_A - Z_1Z_3V_{out} + Z_1Z_2V_A - Z_1Z_2V_{out}$$

$$Z_2Z_3V_{in} = V_A(Z_1Z_2+Z_1Z_3+Z_2Z_3) - V_{out}(Z_1Z_2+Z_1Z_3)$$

$$Z_2Z_3V_{in} = V_{out}\left(1+\frac{Z_2}{Z_4}\right)(Z_1Z_2+Z_1Z_3+Z_2Z_3) - V_{out}(Z_1Z_2+Z_1Z_3)$$

$$Z_2Z_3V_{in} = V_{out}\left(\cancel{Z_1Z_2}+\cancel{Z_1Z_3}+Z_2Z_3+\frac{Z_1Z_2^2}{Z_4}+\frac{Z_1Z_2Z_3}{Z_4}+\frac{Z_2^2Z_3}{Z_4} - \cancel{Z_1Z_2} - \cancel{Z_1Z_3}\right)$$

$$Z_2Z_3V_{in} = V_{out}\left(\frac{Z_2Z_3Z_4+Z_1Z_2^2+Z_1Z_2Z_3+Z_2^2Z_3}{Z_4}\right) \quad /:V_{in}$$

$$H(s) = \frac{V_{out}}{V_{in}} = \frac{Z_2Z_3Z_4}{Z_2Z_3Z_4+Z_1Z_2^2+Z_1Z_2Z_3+Z_2^2Z_3}$$

$$H(s) = \frac{\cancel{Z_2}Z_3Z_4}{\cancel{Z_2}(Z_1Z_2+Z_3(Z_1+Z_2)+Z_3Z_4)}$$

$$H(s) = \frac{Z_3Z_4}{Z_1Z_2+Z_3(Z_1+Z_2)+Z_3Z_4}$$

$$\left.Z_1=R_1,\ Z_2=R_2,\ Z_3=\frac{1}{sC_1};\ Z_4=\frac{1}{sC_2};\right\} \Rightarrow$$

$$\Rightarrow H(s) = \frac{V_{out}}{V_{in}} = \frac{1}{s^2C_1C_2R_1R_2+sC_2(R_1+R_2)+1}$$

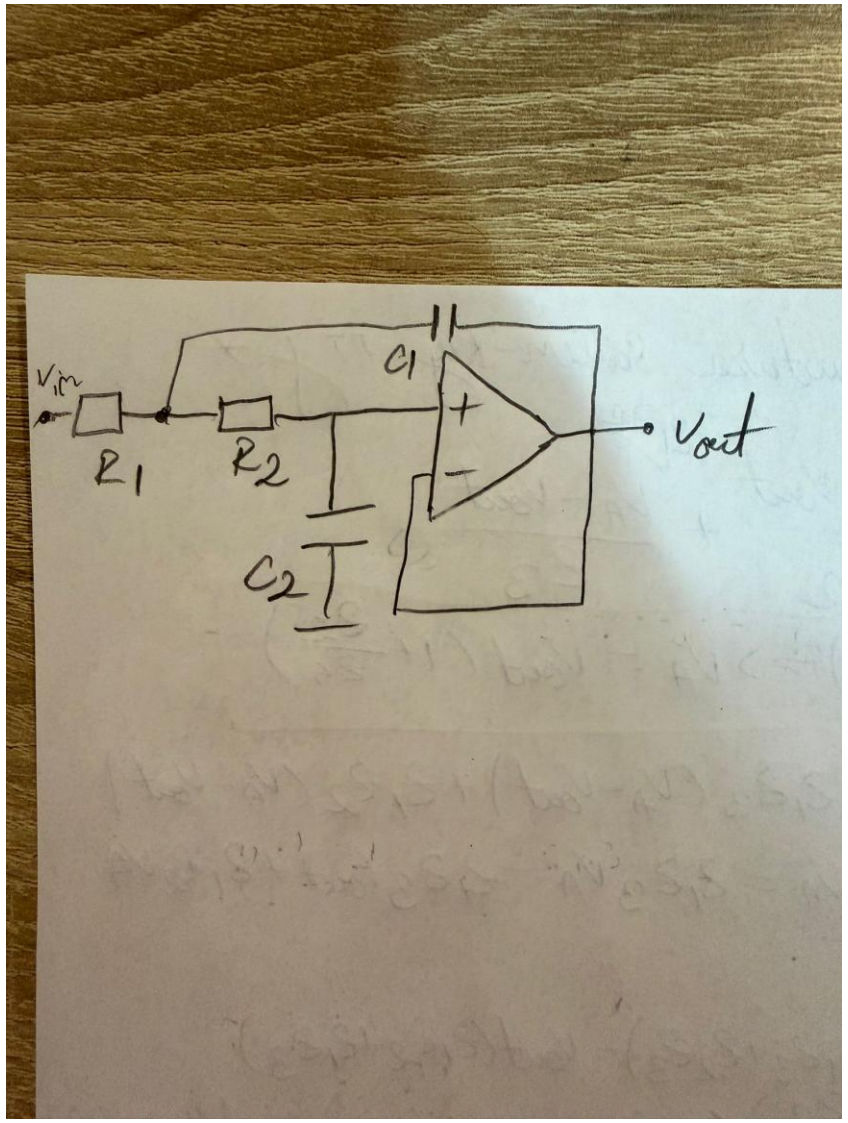

Topologia primei celule: Biquad Sallen-Key TJ-dimensionare

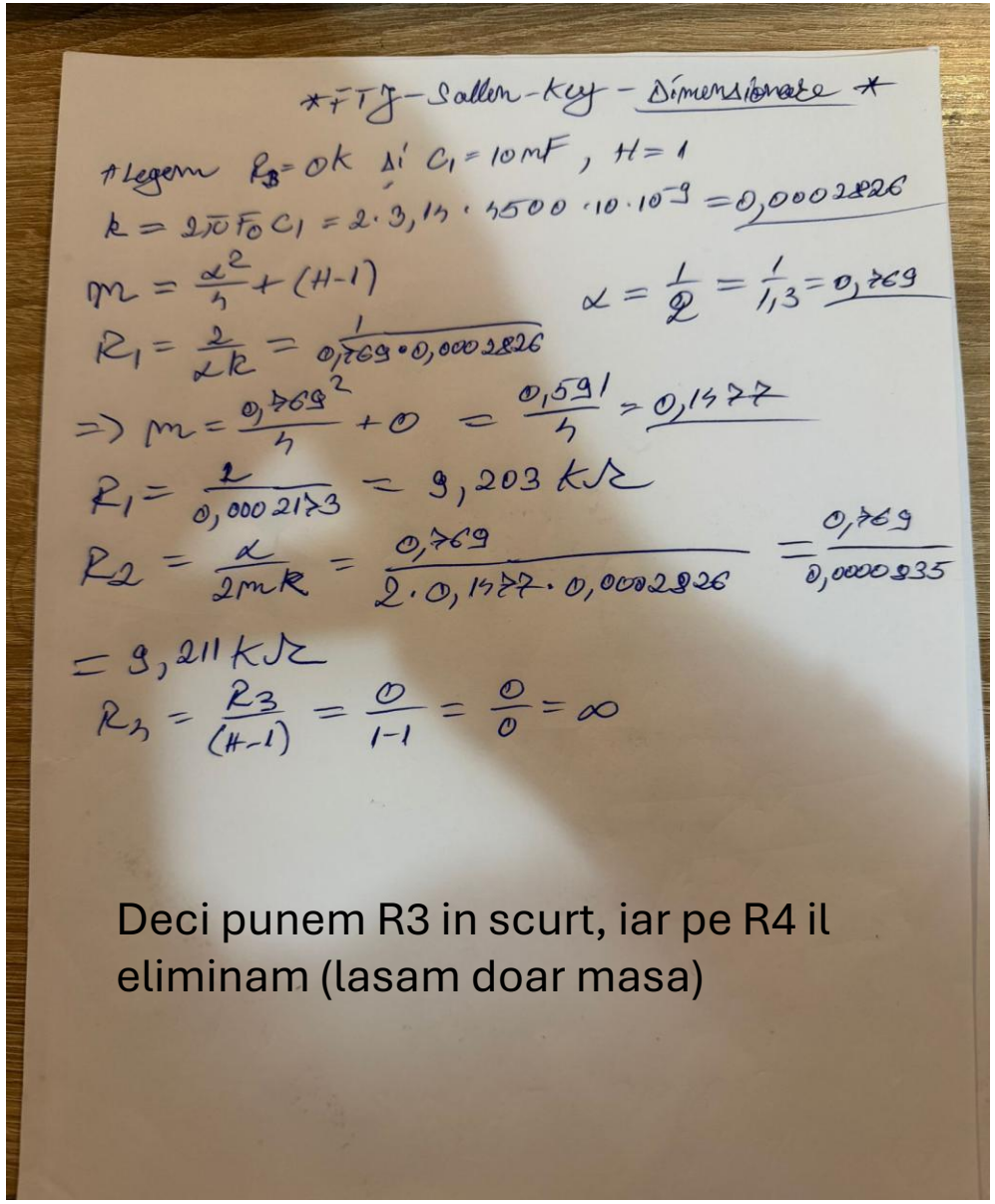

**TJ-Sallen-Key-Dimensionare*

Legem $R_3 = 0k$ și $C_1 = 10nF$, $H = 1$

$k = 2\pi F_0 C_1 = 2 \cdot 3{,}14 \cdot 4500 \cdot 10 \cdot 10^{-9} = 0{,}0002826$

$m = \frac{\alpha^2}{4} + (H-1)$ $\qquad \alpha = \frac{1}{Q} = \frac{1}{1{,}3} = 0{,}769$

$R_1 = \frac{2}{\alpha k} = \frac{1}{0{,}769 \cdot 0{,}0002826}$

$\Rightarrow m = \frac{0{,}769^2}{4} + 0 = \frac{0{,}591}{4} = 0{,}1477$

$R_1 = \frac{2}{0{,}00021773} = 9{,}203\ k\Omega$

$R_2 = \frac{\alpha}{2mk} = \frac{0{,}769}{2 \cdot 0{,}1477 \cdot 0{,}0002826} = \frac{0{,}769}{0{,}0000835}$

$= 9{,}211\ k\Omega$

$R_3 = \frac{R_3}{(H-1)} = \frac{0}{1-1} = \frac{0}{0} = \infty$

Deci punem R3 in scurt, iar pe R4 il eliminam (lasam doar masa)

SALLEN-KEY LOWPASS

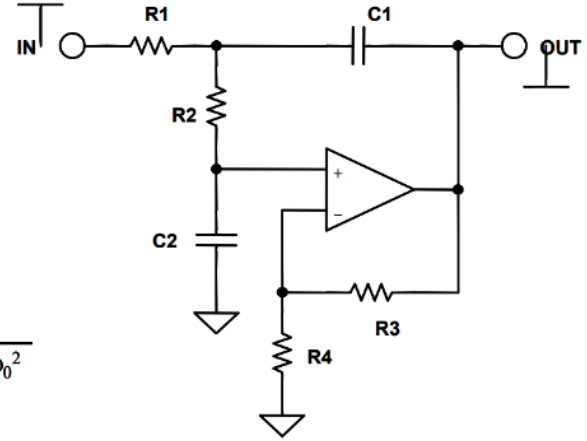

$$\frac{+H\,\omega_0^2}{s^2 + \alpha\,\omega_0\,s + \omega_0^2}$$

$$\frac{V_O}{V_{IN}} = \frac{H\,\frac{1}{R1\,R2\,C1\,C2}}{s^2 + s\left[\left(\frac{1}{R1} + \frac{1}{R2}\right)\frac{1}{C1} + \frac{(1-H)}{R2\,C2}\right] + \frac{1}{R1\,R2\,C1\,C2}}$$

CHOOSE: C1 R3

THEN: $k = 2\pi F_O C1$ $\qquad R4 = \frac{R3}{(H-1)}$

$m = \frac{\alpha^2}{4} + (H-1)$

$C2 = m\,C1$

$R1 = \frac{2}{\alpha k}$

$R2 = \frac{\alpha}{2mk}$

Biquad 2 Sallen-Key

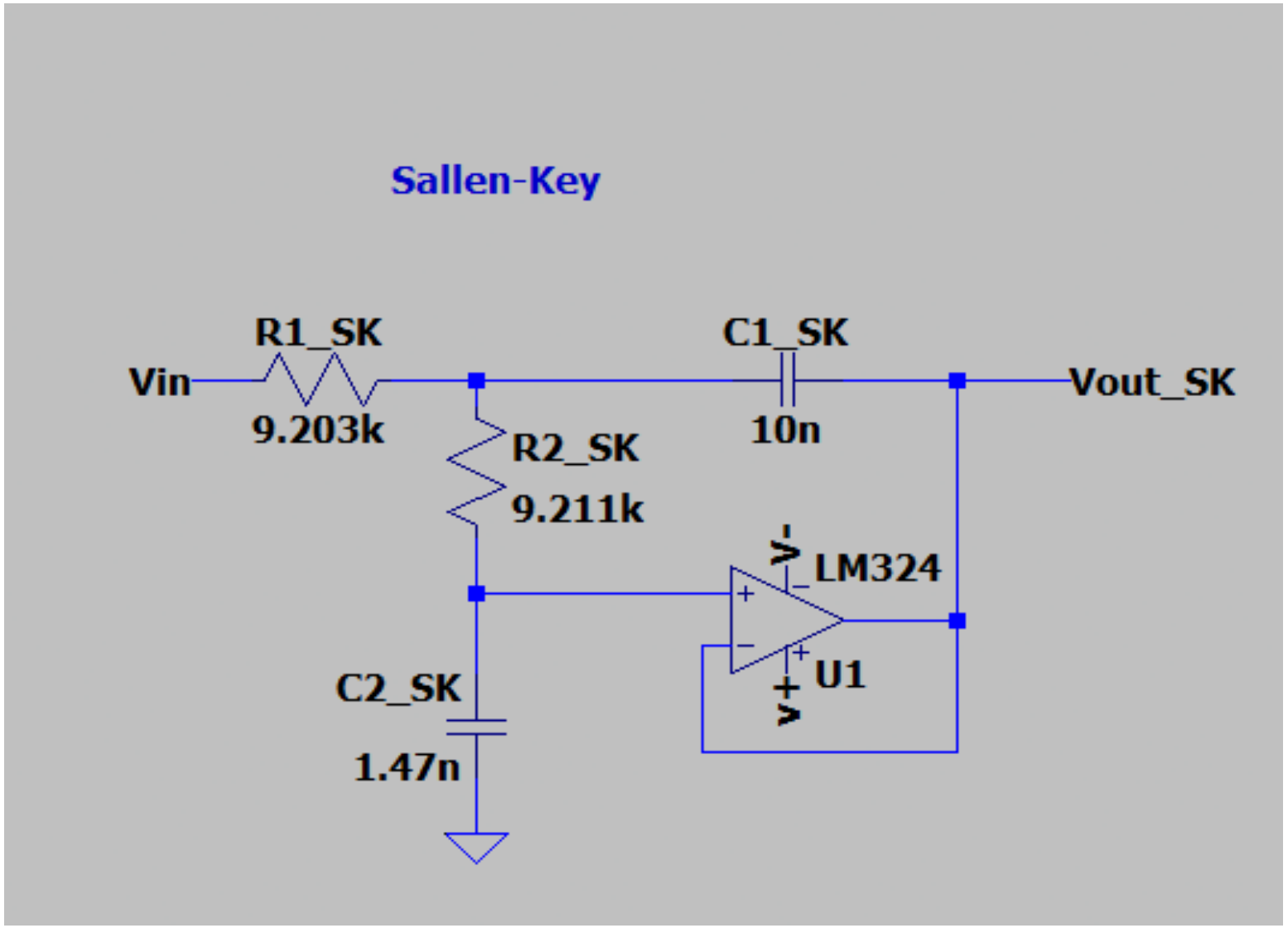

Comparare Biquad 2 Sallen-Key-BW-surse modelate cebasev

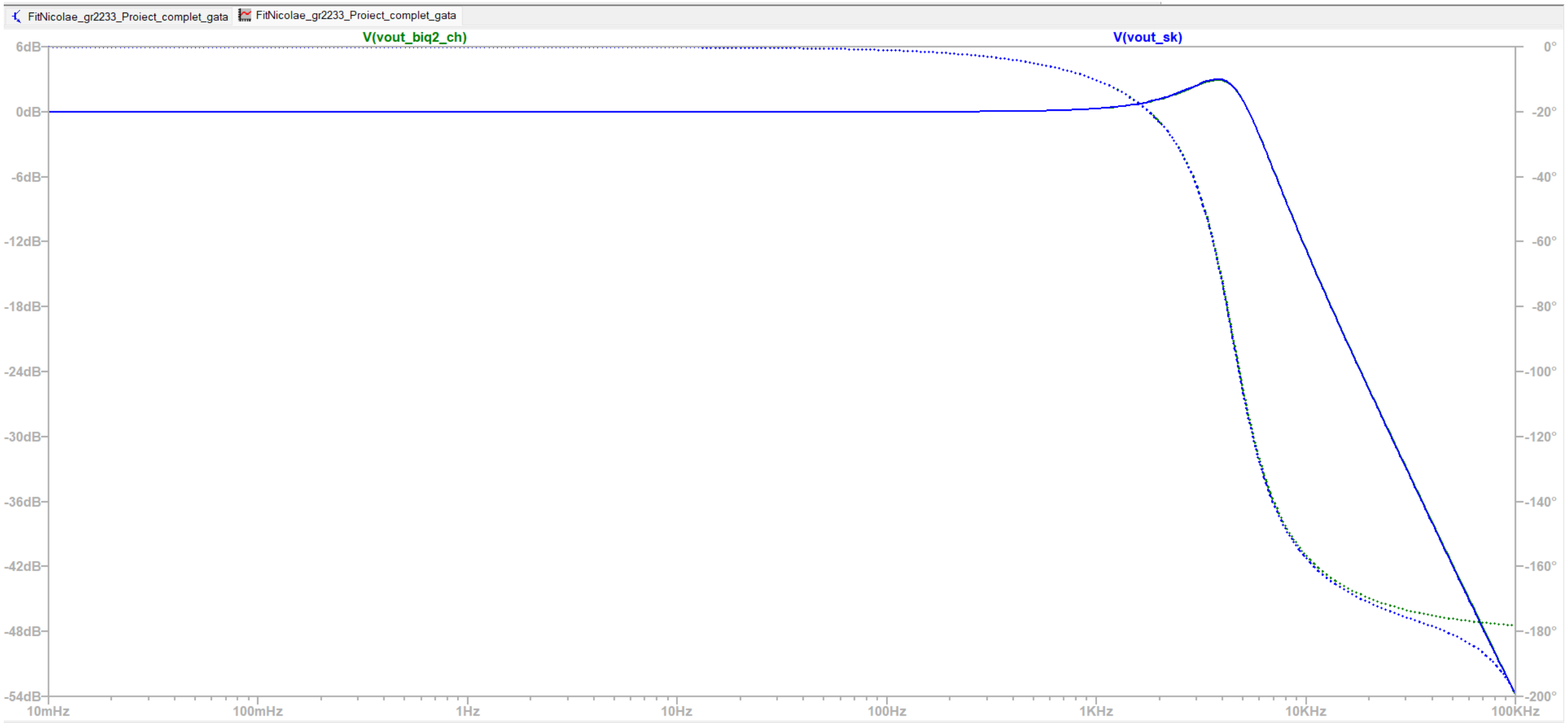

Place a new Diode on the schematic.

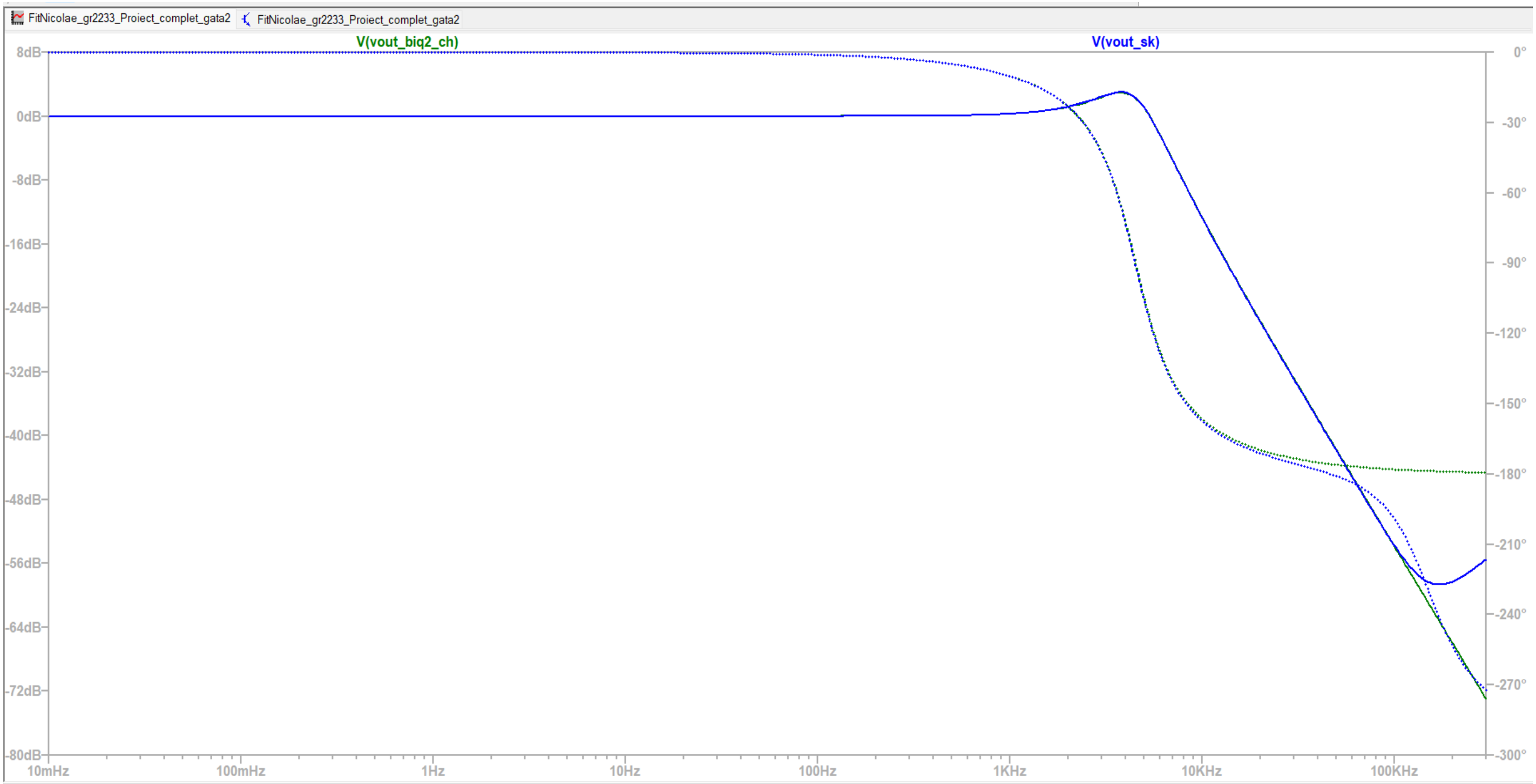

Left-Click to redraw V(vout_biq2_ch)[dB], Right-Click to edit. Control-Left-Click to integrate. Alt-Left-Click to reverse cross probe vout_biq2_ch.

B -3dB

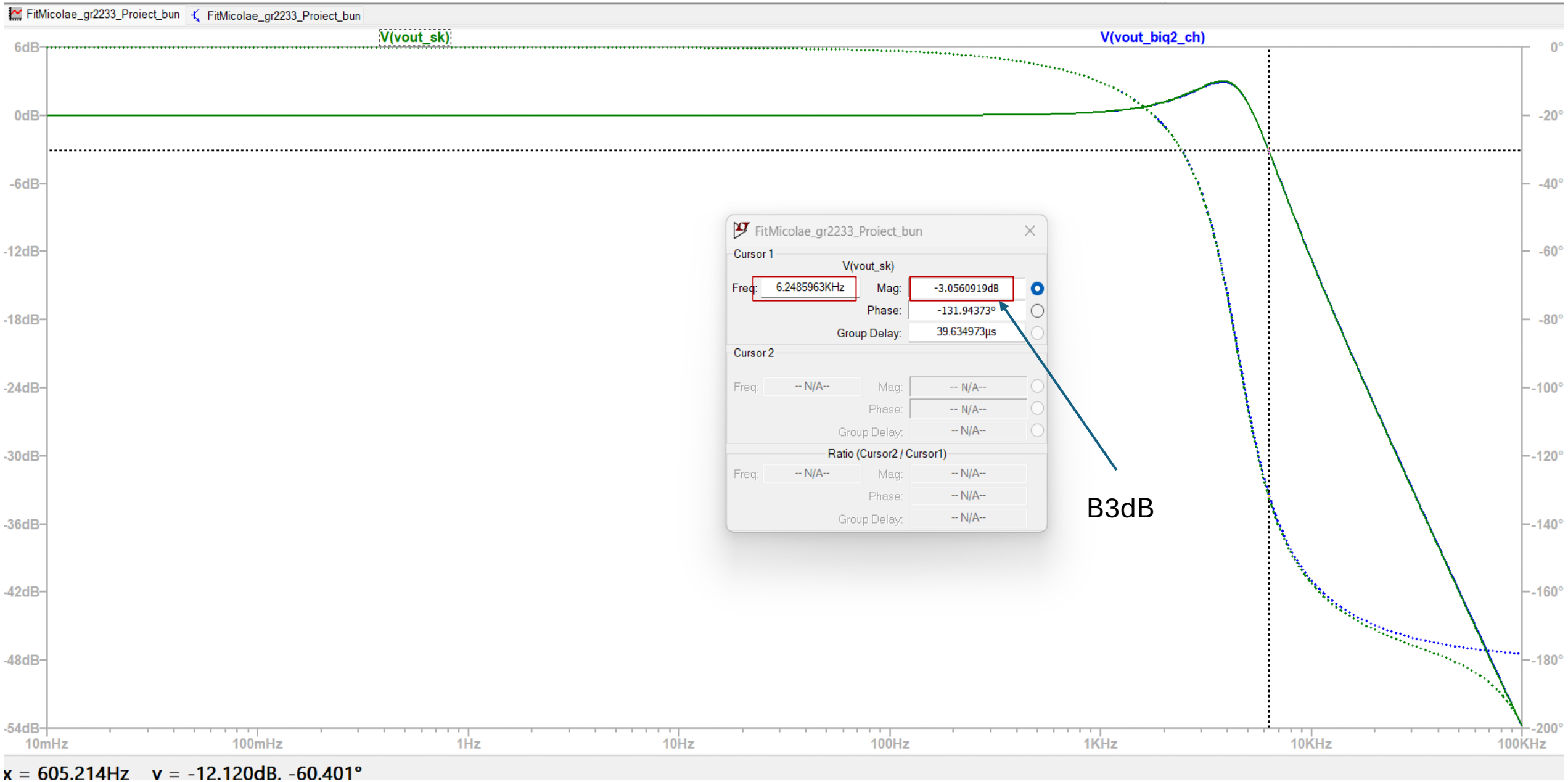
FitMicolae_gr2233_Proiect_bun
FitMicolae_gr2233_Proiect_bun
V(vout_sk)
V(vout_biq2_ch)
6dB
0dB
-6dB
-12dB
-18dB
-24dB
-30dB
-36dB
-42dB
-48dB
-54dB
0°
-20°
-40°
-60°
-80°
-100°
-120°
-140°
-160°
-180°
-200°
10mHz
100mHz
1Hz
10Hz
100Hz
1KHz
10KHz
100KHz
FitMicolae_gr2233_Proiect_bun
Cursor 1
V(vout_sk)
Freq: 6.2485963KHz
Mag: -3.0560919dB
Phase: -131.94373°
Group Delay: 39.634973µs
Cursor 2
Freq: -- N/A--
Mag: -- N/A--
Phase: -- N/A--
Group Delay: -- N/A--
Ratio (Cursor2 / Cursor1)
Freq: -- N/A--
Mag: -- N/A--
Phase: -- N/A--
Group Delay: -- N/A--
B3dB
x = 605.214Hz y = -12.120dB, -60.401°

B 3dB- la riplu 3dB

Topologia celei de a doua celule: Biquad Kerwin-Huelsman-Newcomb H(s)

Topologia celulei a doua: Biquad TS KHN

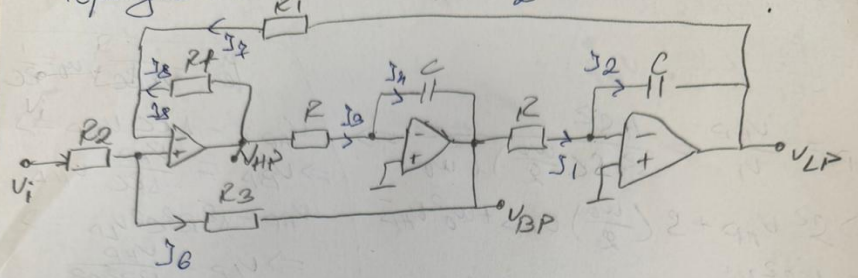

Pt. A3: $\frac{V_{BP}-0}{R} = \frac{0-V_{LP}}{1/\Delta C} \Rightarrow V_{BP} \Rightarrow V_{BP} = -\Delta RC V_{LP}$

$(J_1 = J_2)$

Pt. A2: $\frac{V_{HP}-0}{R} = \frac{0-V_{BP}}{1/\Delta C} \Rightarrow V_{HP} = -\Delta RC V_{BP} = \Delta^2 R^2 C^2 V_{LP}$

Pt. A_1: I. Punem V_B pe +

$(J_5 = J_6)$ $\frac{V_i - V_B}{R_2} = \frac{V_B - V_{BP}}{R_3} \Rightarrow R_2 \cdot V_B - R_2 \cdot V_{BP} = R_3 \cdot V_i - R_3 \cdot V_B$

$R_3 \cdot V_i + R_2 \cdot V_{BP} = V_B (R_2 + R_3) \;|:\; R_2 R_3$

$\frac{V_i}{R_2} + \frac{V_{BP}}{R_3} = V_B \left(\frac{R_2+R_3}{R_2 R_3}\right) \;|:\; \left(\frac{R_2+R_3}{R_2 R_3}\right) \Rightarrow$

$\Rightarrow V_B = \left(\frac{R_3}{R_2+R_3}\right) V_i + \left(\frac{R_2}{R_2+R_3}\right) \cdot V_{BP}$ (1)

II. Punem V_B pe −

$\frac{V_{LP} - V_B}{R_1} + \frac{V_{HP} - V_B}{R_f} = 0 \Rightarrow \frac{V_{HP}}{R_f} + \frac{V_{LP}}{R_1} = V_B \left(\frac{1}{R_1} + \frac{1}{R_f}\right)$ (R_f, R_1)

$\Rightarrow V_B = \left(\frac{R_1}{R_1+R_f}\right) \cdot V_{HP} + \left(\frac{R_f}{R_1+R_f}\right) V_{LP}$ (2)

Din (1), (2) $\Rightarrow \left(\frac{R_1}{R_1+R_f}\right) V_{HP} + \left(\frac{R_F}{R_1+R_f}\right) V_{LP} = \left(\frac{R_3}{R_2+R_3}\right) V_i + \left(\frac{R_2}{R_2+R_2}\right) \cdot V_{BP}$

$\Rightarrow V_{HP} = \left(\frac{R_3}{R_2+R_3}\right)\left(1+\frac{R_f}{R_1}\right) V_i + \left(\frac{R_2}{R_2+R_3}\right)\left(1+\frac{R_f}{R_1}\right)\left(-\frac{\omega_0}{s} V_{HP}\right)$

$= \frac{R_f}{R_1}\left(\frac{\omega_0^2}{s^2} V_{HP}\right)$

$T_{HP} = \frac{V_{HP}}{V_i} = \frac{K s^2}{s^2 + s\left(\frac{\omega_0}{Q}\right) + \omega_0^2} \Rightarrow$

$\Rightarrow s^2 V_{HP} + s\left(\frac{\omega_0}{Q}\right) V_{HP} + \omega_0^2 V_{HP}$

$= K s^2 V_i$

$V_{HP} + \left(\frac{\omega_0}{Q}\right)\frac{V_{HP}}{s} + \left(\frac{\omega_0}{s}\right)^2 V_{HP} = K V_i \Rightarrow$

$\Rightarrow V_{HP} = K V_i - \left(\frac{\omega_0}{Q}\right)\frac{V_{HP}}{s} - \left(\frac{\omega_0}{s}\right)^2 \cdot V_{HP}$

$V_{HP} = \left(\frac{R_3}{R_2+R_3}\right)\left(1+\frac{R_F}{R_1}\right) V_i + \left(\frac{R_2}{R_2+R_3}\right)\left(1+\frac{R_F}{R_1}\right)\left(-\frac{\omega_0}{s} V_{HP}\right)$

$- \frac{R_f}{R_1}\left(\frac{\omega_0^2}{s^2} V_{HP}\right)$

$* \Rightarrow \frac{R_F}{R_1} = 1 \Rightarrow R_F = R_1 = 1$

$** \Rightarrow \left(\frac{R_2}{R_2+R_3}\right)\left(1+\frac{R_f}{R_1}\right) = \frac{1}{Q} \Rightarrow \frac{1}{Q} = \frac{2R_2}{R_2+R_3} \Rightarrow Q = \frac{R_2+R_3}{2R_2}$

$Q = \frac{1}{2} + \frac{R_3}{2R_2} \Rightarrow \frac{R_3}{2R_2} = Q - \frac{1}{2} \;|:2 \Rightarrow \boxed{\frac{R_3}{R_2} = 2Q - 1}$

$*** \Rightarrow \left(\frac{R_3}{R_2+R_3}\right)\left(1+\frac{R_f}{R_1}\right) = \cancel{\frac{1}{Q} \Rightarrow \frac{1}{Q} = \frac{2R_2}{R_2+R_3} \Rightarrow Q = \frac{R_2+R_3}{2R_2}}$

$K \Rightarrow K = \frac{2R_3}{R_2+R_3} = \frac{2R_3}{R_2\underbrace{\left(1+\frac{R_3}{R_2}\right)}_{=1+2Q-1}} \Rightarrow K = 2 \cdot \frac{R_3}{R_2} \cdot \frac{1}{2Q} \Rightarrow$

$\Rightarrow K = \frac{2(2Q-1)}{2Q} = \frac{4Q-2}{2Q} = \frac{2Q-1}{Q} \Rightarrow \boxed{K = 2 - \frac{1}{Q}}$

$P_0 = \frac{1}{2\pi RC}, \; \omega_0 = \frac{1}{RC}$

$V_{HP} = -\Delta RC V_{BP} \Rightarrow$

$\Rightarrow V_{BP} = \frac{V_{HP}}{-\Delta RC} V_{HP}$

$V_{HP} = \Delta^2 R^2 C^2 V_{LP} \Rightarrow$

$\Rightarrow V_{LP} = \frac{V_{HP}}{\Delta^2 R^2 C^2}$

$V_{LP} = \frac{\omega_0^2}{s^2} V_{HP}$

Topologia celulei a doua: Biquad Kerwin-Huelsman-Newcomb
Dimensionare

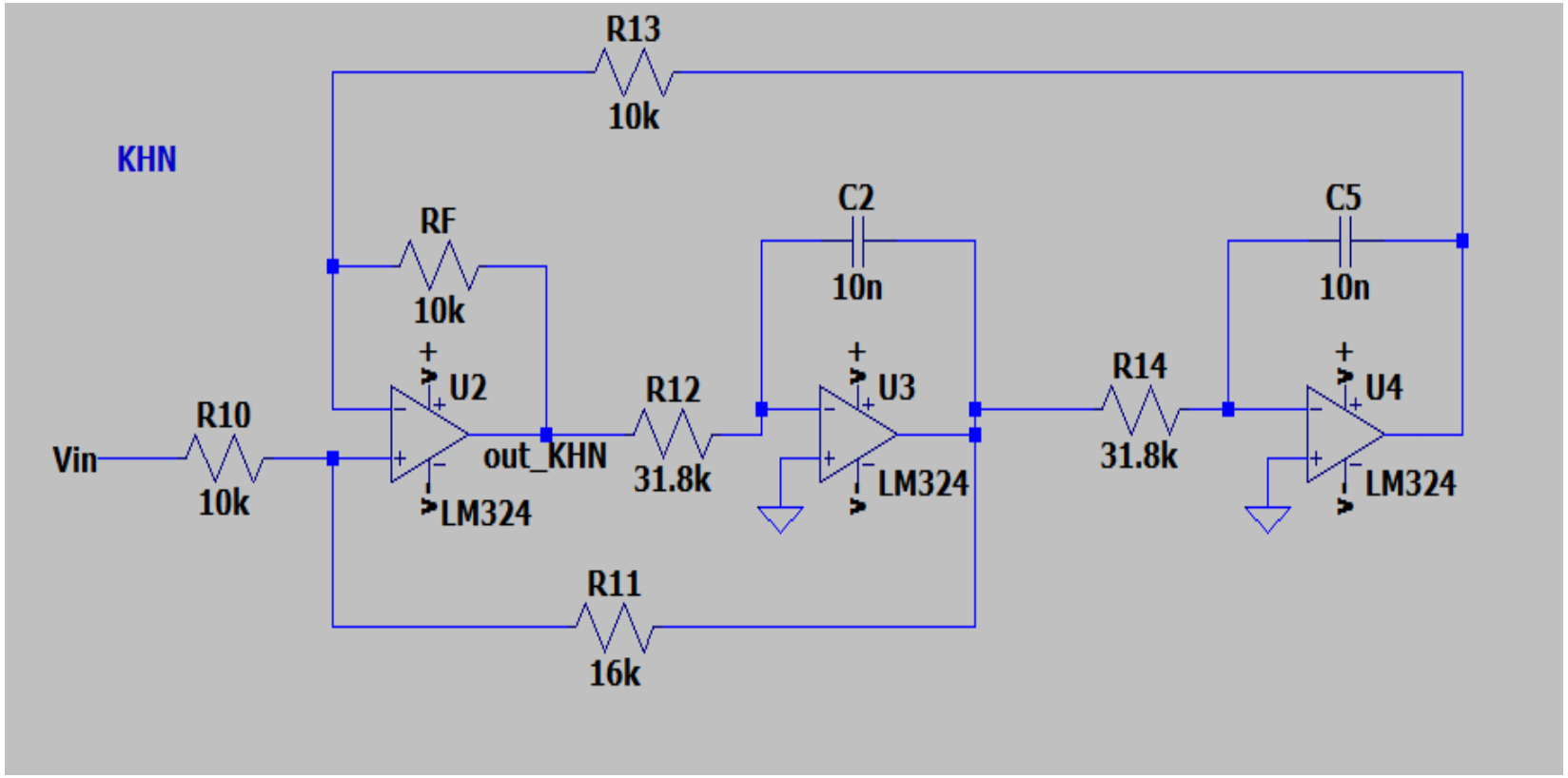

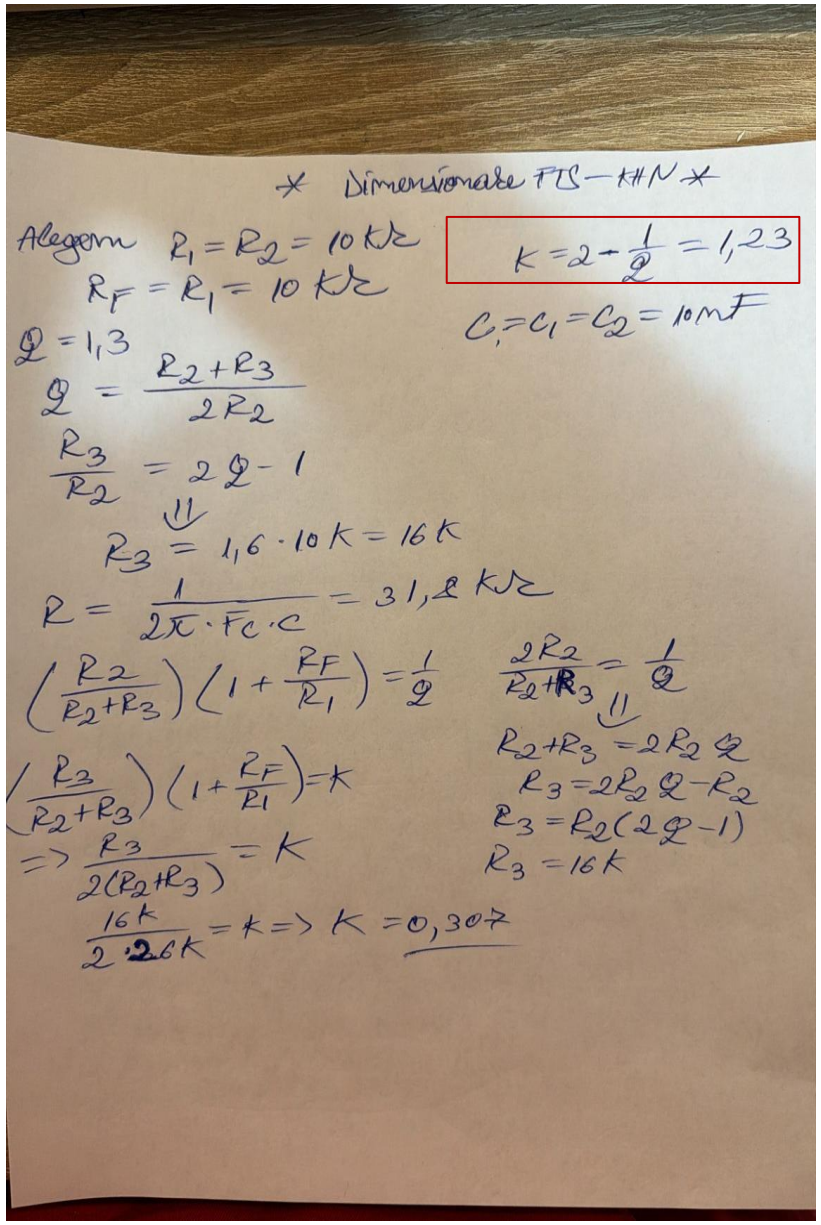

* Dimensionare FTS – KHN *

Alegem $R_1 = R_2 = 10\,k\Omega$

$R_F = R_1 = 10\,k\Omega$

$\boxed{K = 2 - \frac{1}{Q} = 1{,}23}$

$C_1 = C_1 = C_2 = 10\,nF$

$Q = 1{,}3$

$Q = \frac{R_2 + R_3}{2R_2}$

$\frac{R_3}{R_2} = 2Q - 1$

$\Downarrow$

$R_3 = 1{,}6 \cdot 10\,k = 16\,k$

$R = \frac{1}{2\pi \cdot F_c \cdot C} = 31{,}8\,k\Omega$

$\left(\frac{R_2}{R_2+R_3}\right)\left(1 + \frac{R_F}{R_1}\right) = \frac{1}{Q}$

$\frac{2R_2}{R_2+R_3} = \frac{1}{Q}$

$\Downarrow$

$R_2 + R_3 = 2R_2 Q$

$R_3 = 2R_2 Q - R_2$

$R_3 = R_2(2Q - 1)$

$R_3 = 16\,k$

$\left(\frac{R_3}{R_2+R_3}\right)\left(1 + \frac{R_F}{R_1}\right) = K$

$\Rightarrow \frac{R_3}{2(R_2+R_3)} = K$

$\frac{16\,k}{2 \cdot 26\,k} = K \Rightarrow K = 0{,}307$

Comparare Biquad 1 KHN-surse modelate Cebasev

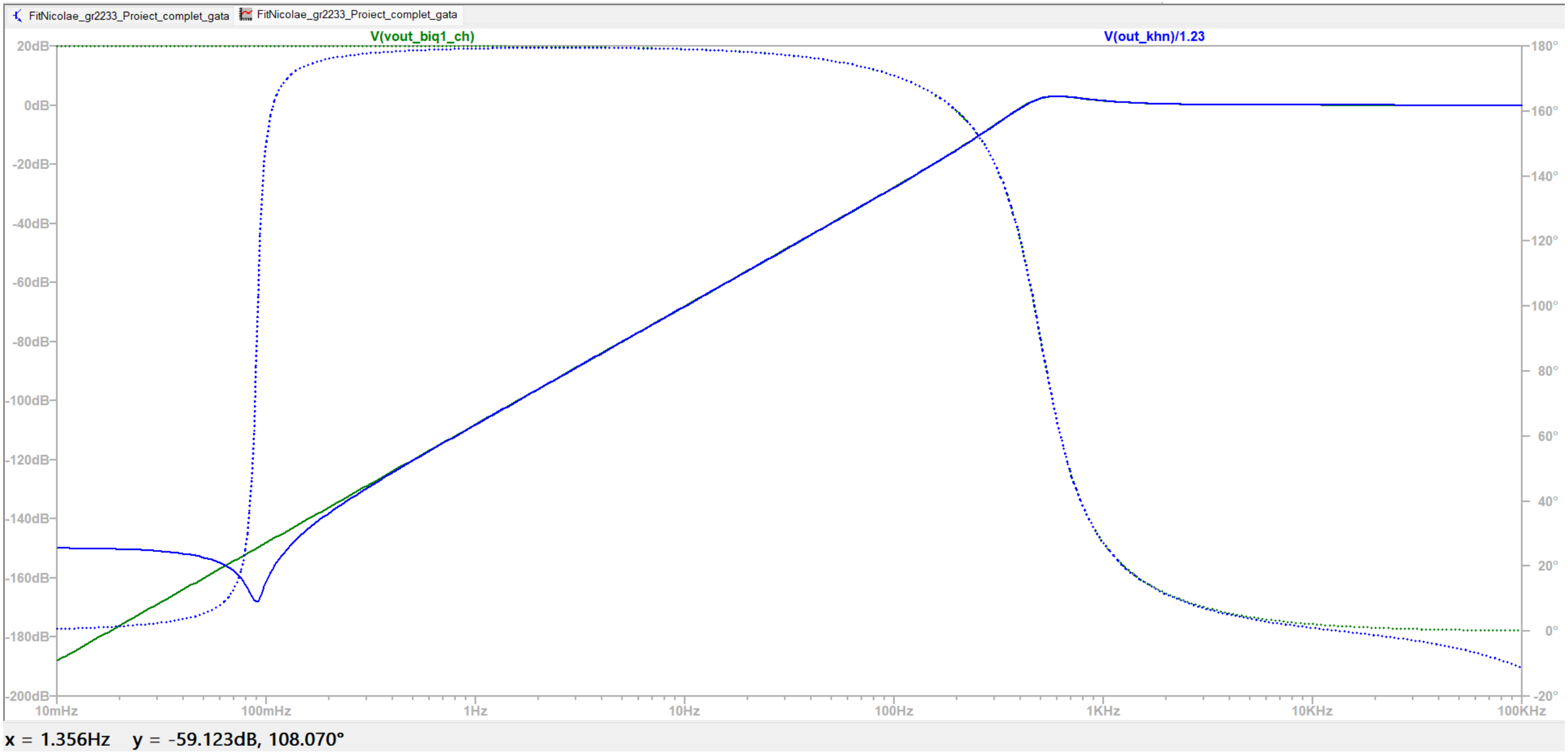

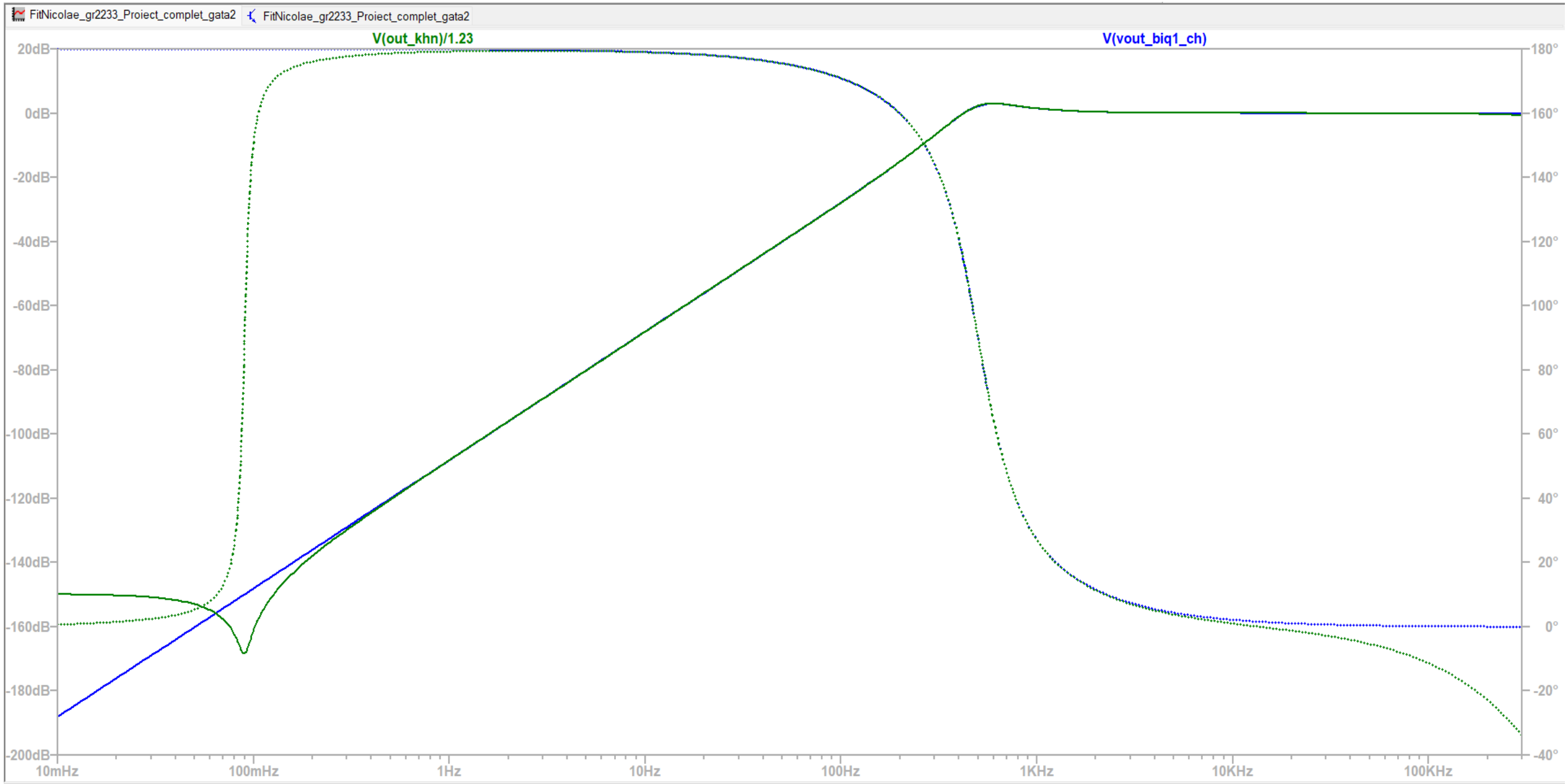

Right-Click to set up magnitude plotting parameters

B 3dB

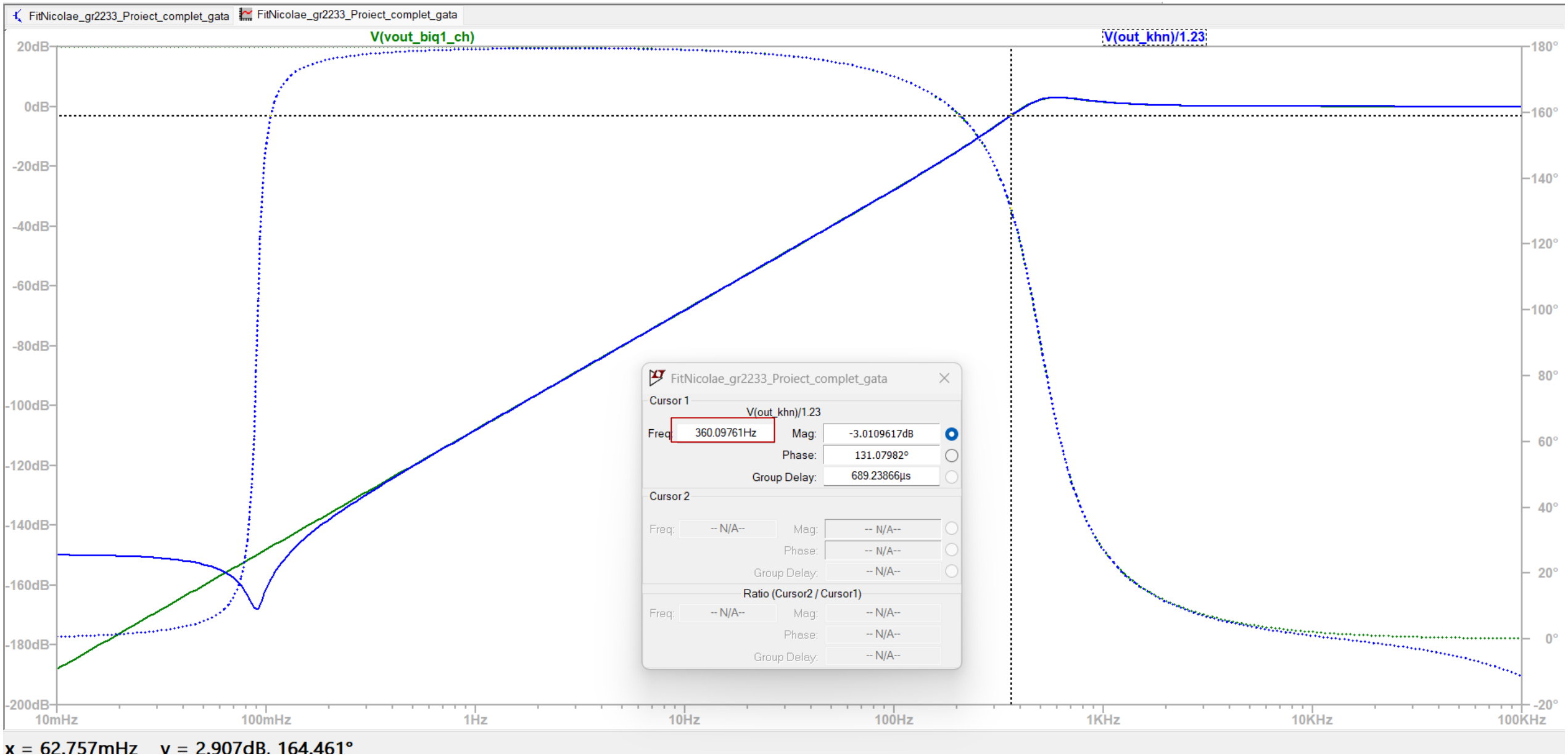
FitNicolae_gr2233_Proiect_complet_gata
FitNicolae_gr2233_Proiect_complet_gata
V(vout_biq1_ch)
V(out_khn)/1.23
20dB
0dB
-20dB
-40dB
-60dB
-80dB
-100dB
-120dB
-140dB
-160dB
-180dB
-200dB
180°
160°
140°
120°
100°
80°
60°
40°
20°
0°
-20°
10mHz
100mHz
1Hz
10Hz
100Hz
1KHz
10KHz
100KHz
FitNicolae_gr2233_Proiect_complet_gata
Cursor 1
V(out_khn)/1.23
Freq: 360.09761Hz
Mag: -3.0109617dB
Phase: 131.07982°
Group Delay: 689.23866µs
Cursor 2
Freq: -- N/A--
Mag: -- N/A--
Phase: -- N/A--
Group Delay: -- N/A--
Ratio (Cursor2 / Cursor1)
Freq: -- N/A--
Mag: -- N/A--
Phase: -- N/A--
Group Delay: -- N/A--
x = 62.757mHz y = 2.907dB, 164.461°

Circuit Filtru Cebasev complet

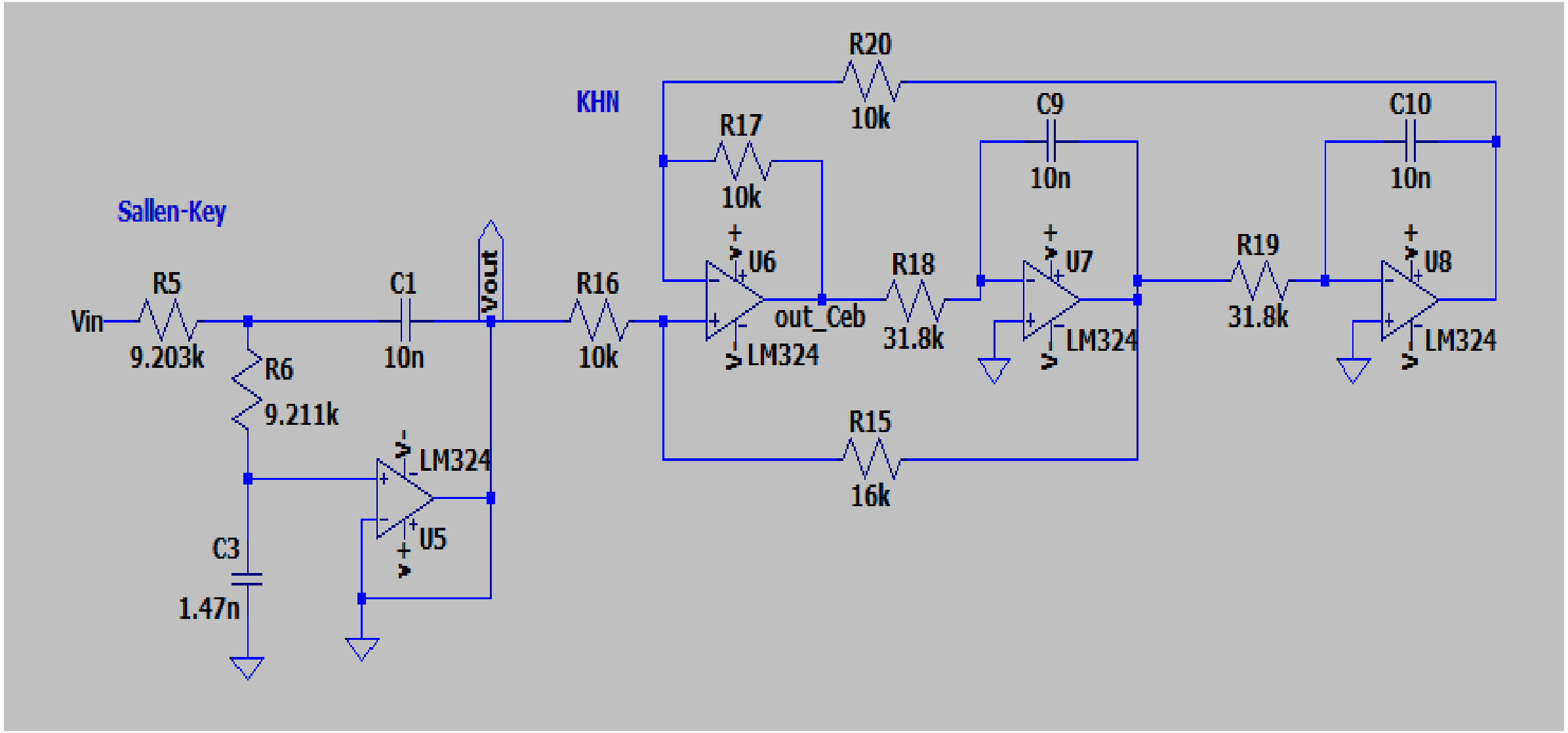

Comparare filtru Cebasev-surse modelate Cebasev

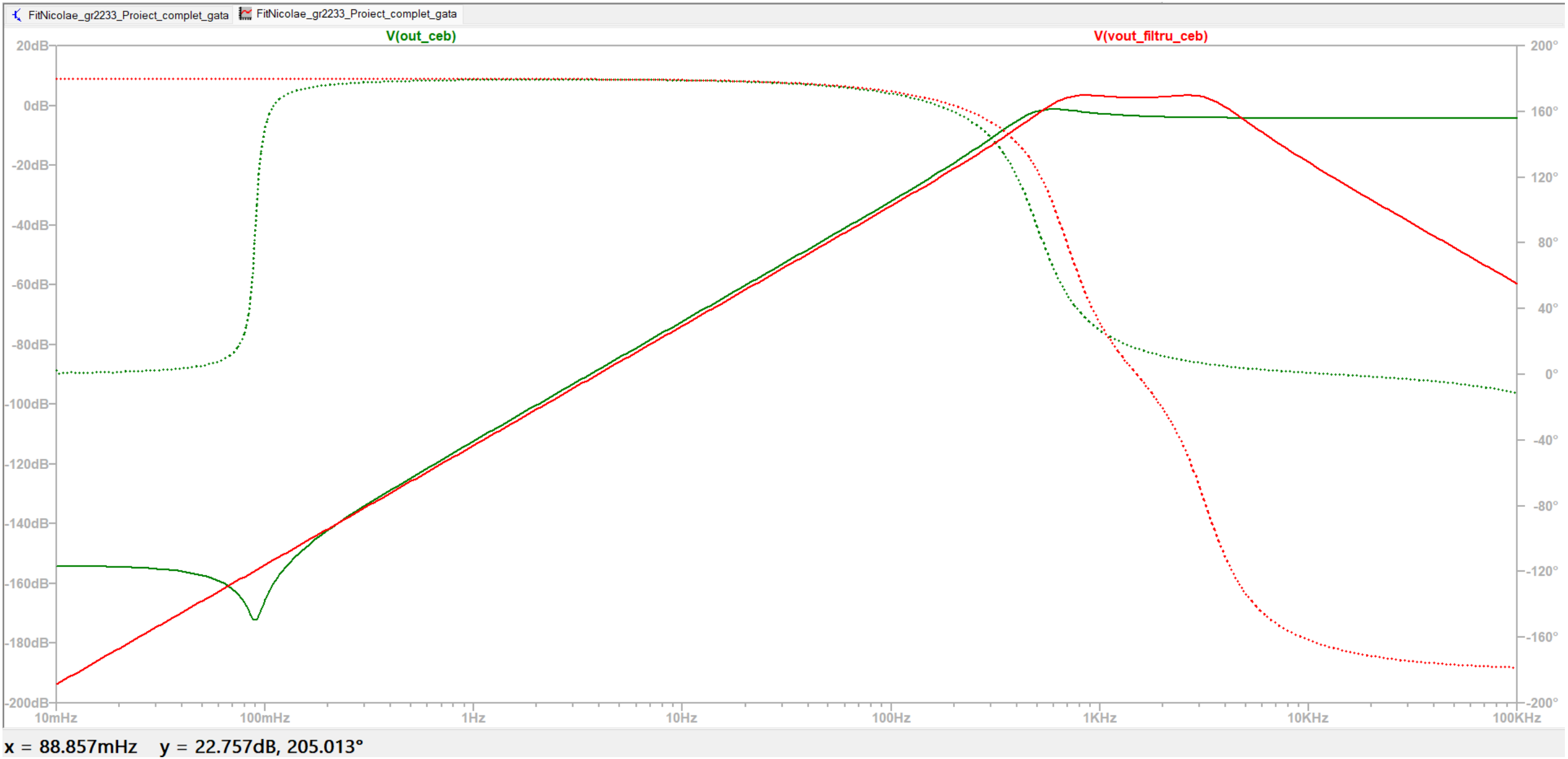

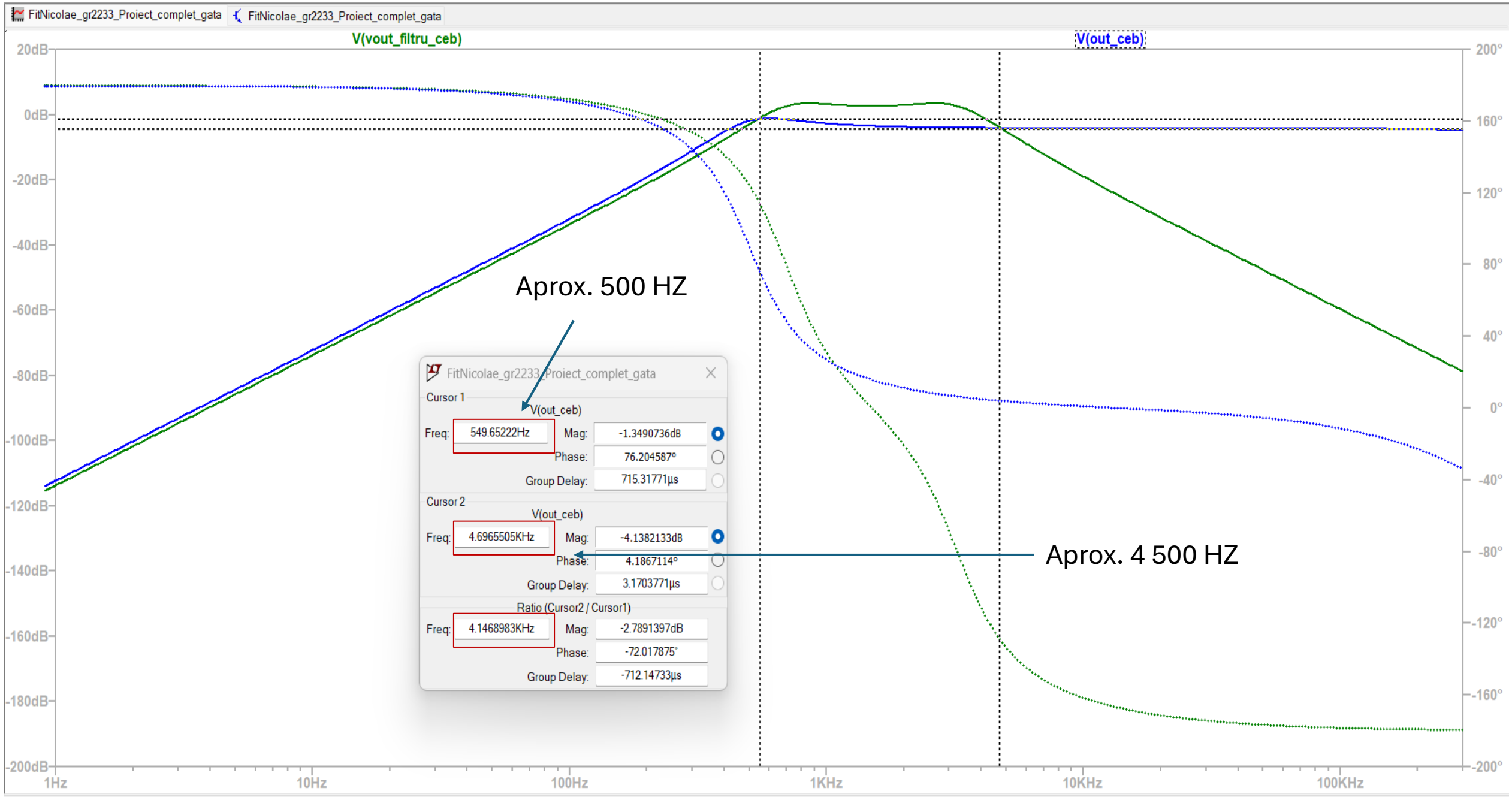

Right-Click to set up magnitude plotting parameters

Filtrul cu valori nominale

Rezistente:

- Modificarile cu valori nominale din seria E24 sunt următoarele:

9,203ohmi=9,1k(nominal), 9,203ohmi=9,1k(nominal),
31.8k=3.3k(nominal),16k=16k(nominal), 10k=10k(nominal)

Condensatoarele au deja 10n, iar 1,47nF=1,5nF

Filtrul cu valori nominale

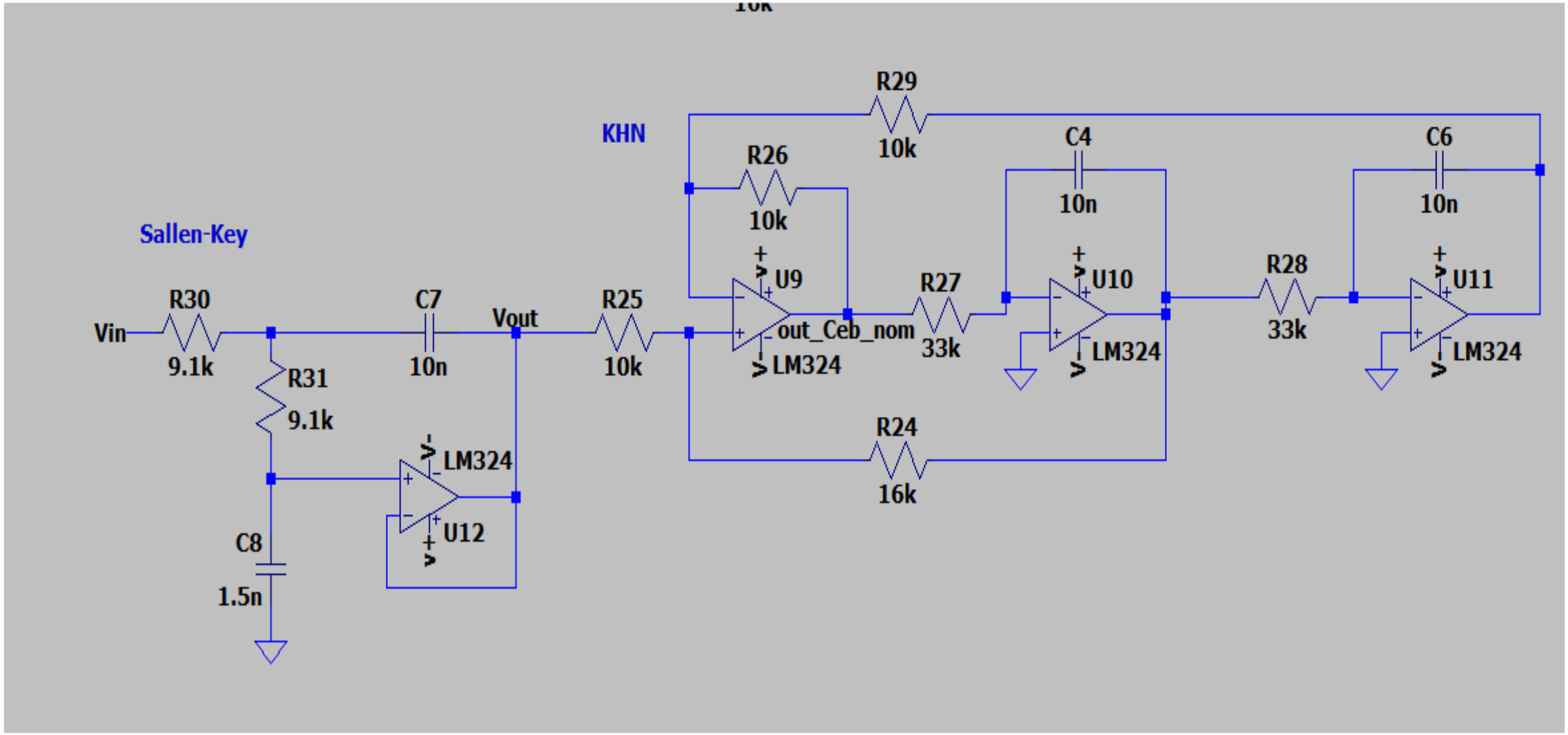

Comparare biquad Sallen-Key nominal, matematic si sursa modelata

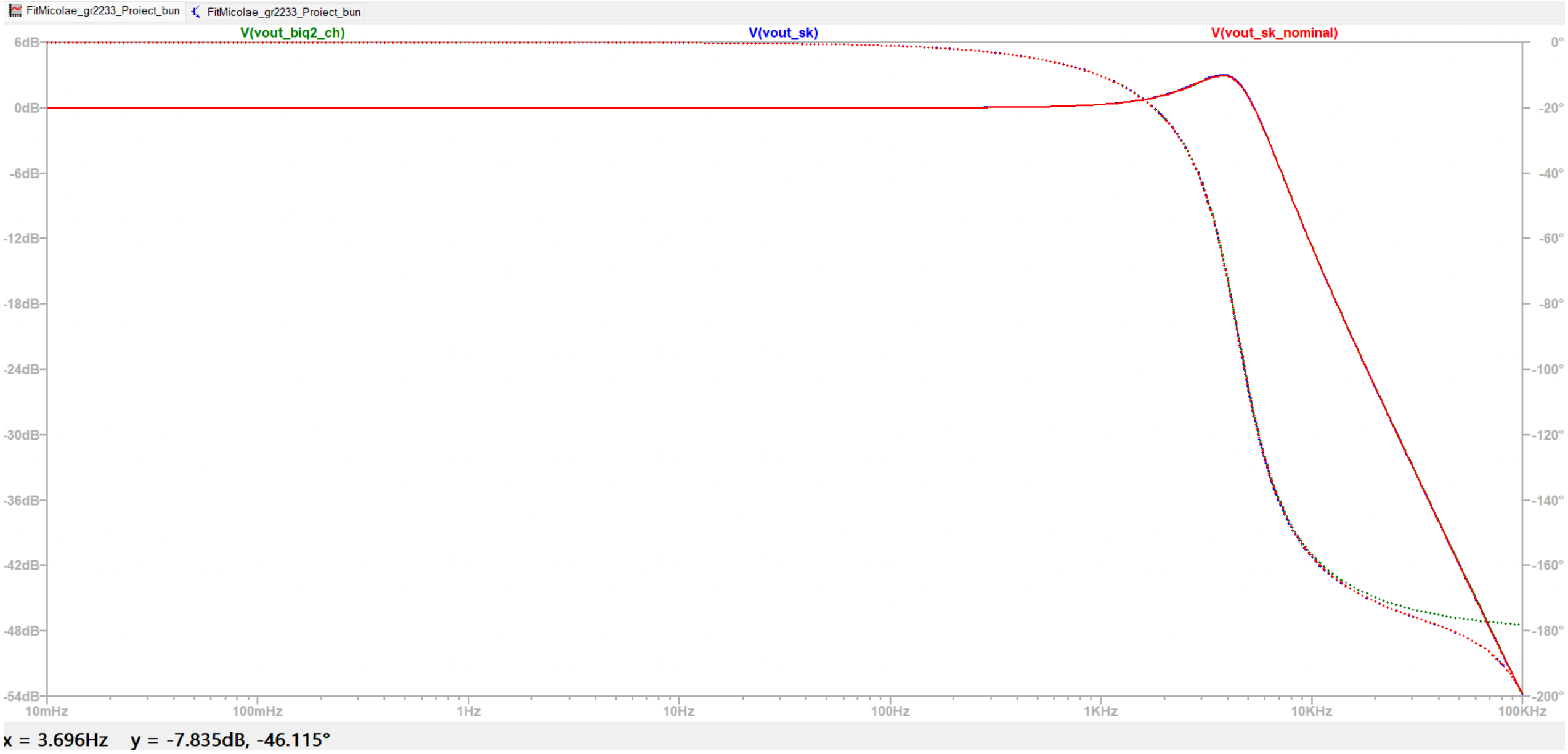

Comparare biquad KHN nominal, matematic si sursa modelata

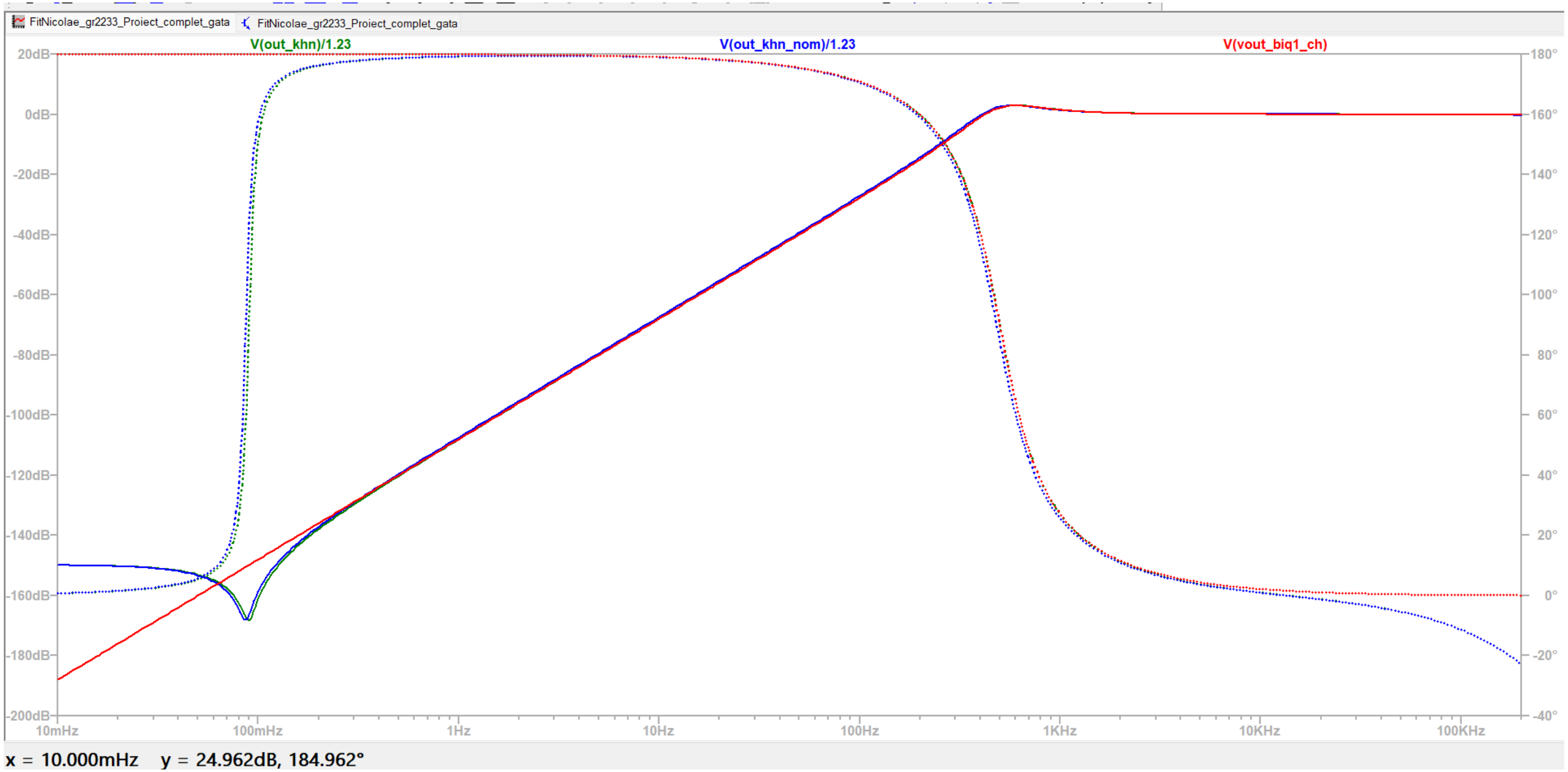

Comparare Filtru Cebasev nominal, matematic si cu surse modelate

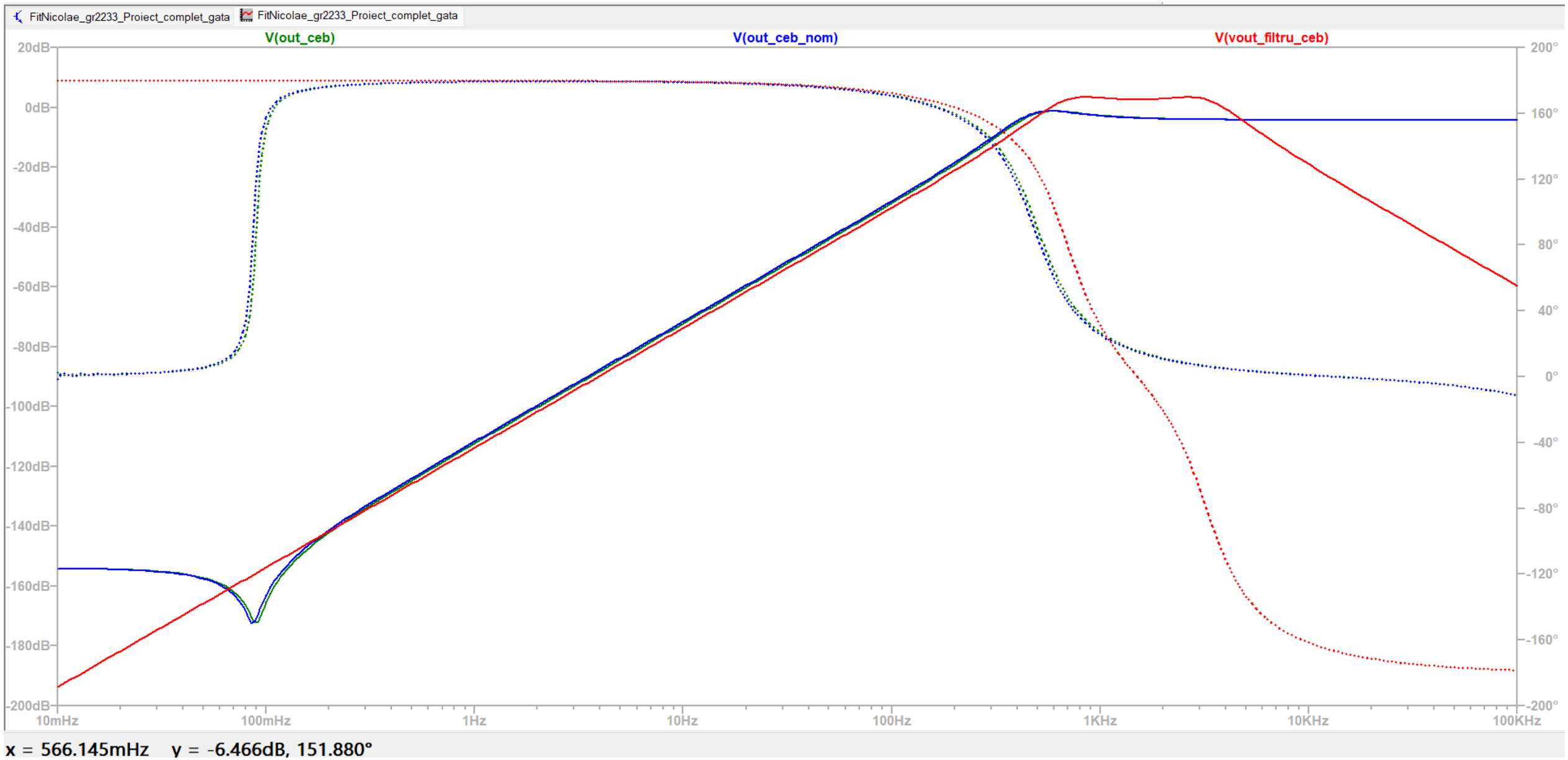

Comparare 4500Hz Nominal≈Matematic

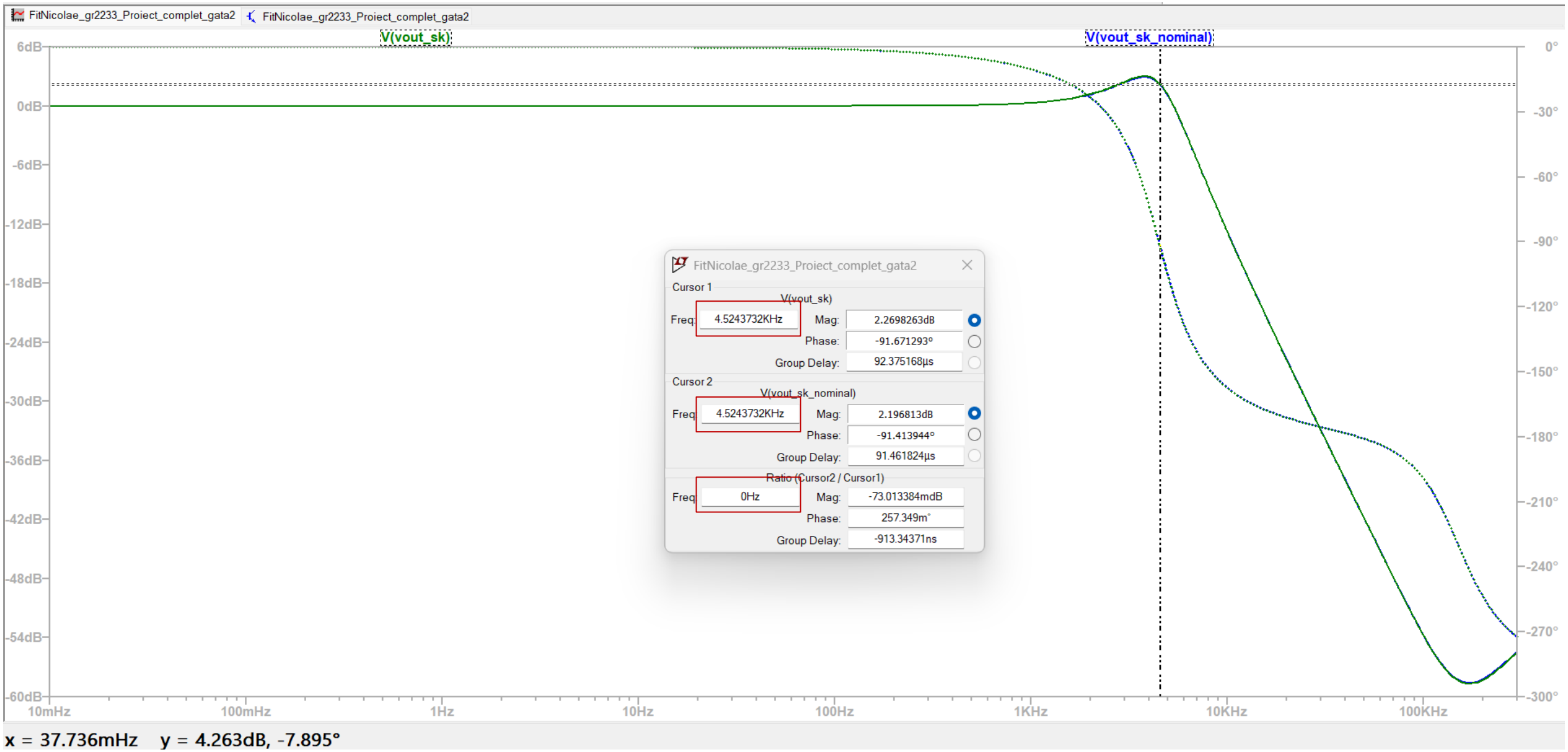

Comparare 500Hz Nominal≈Matematic

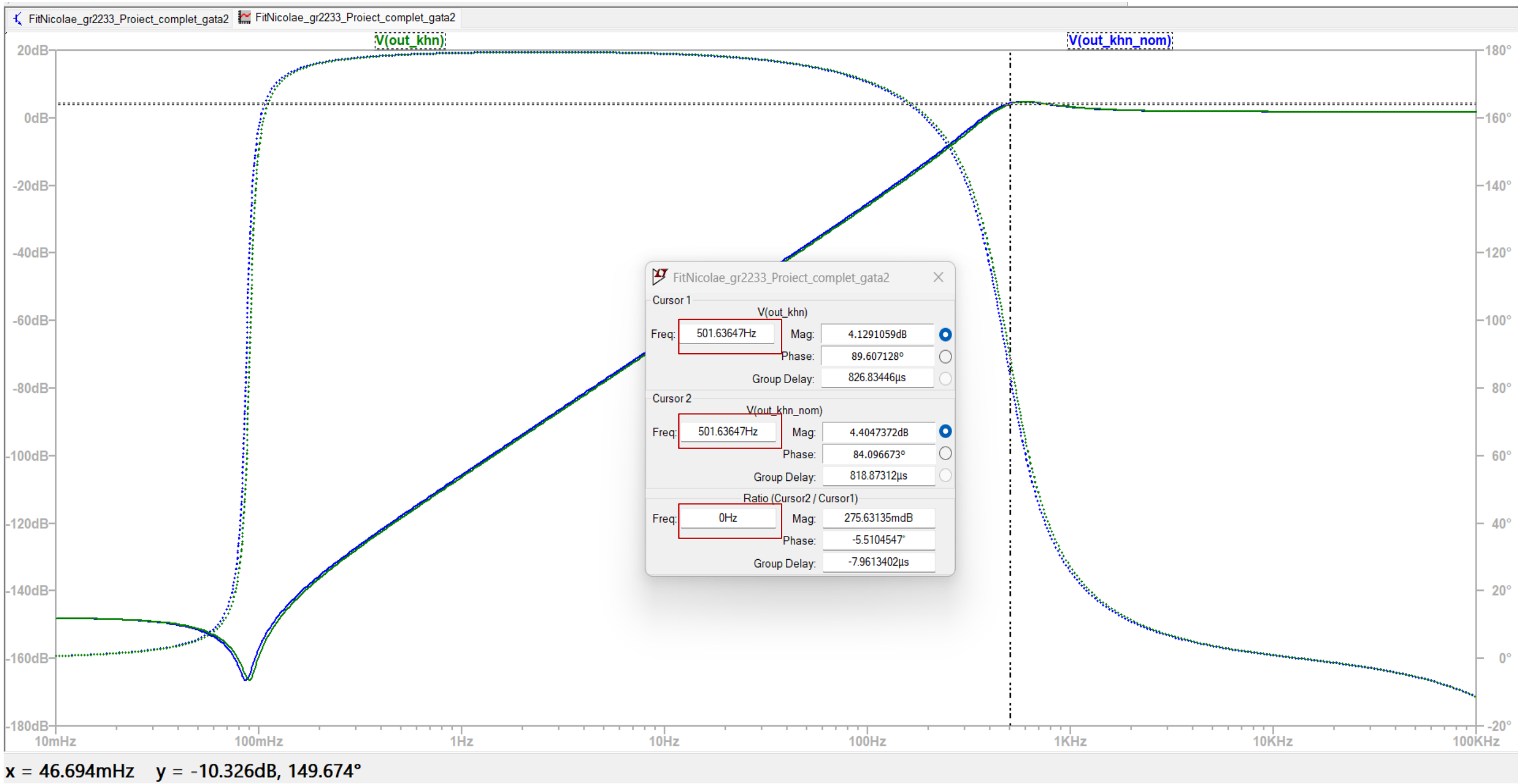

Comparare [500,4500]Hz Nominal≈Matematic cu Surse modelate

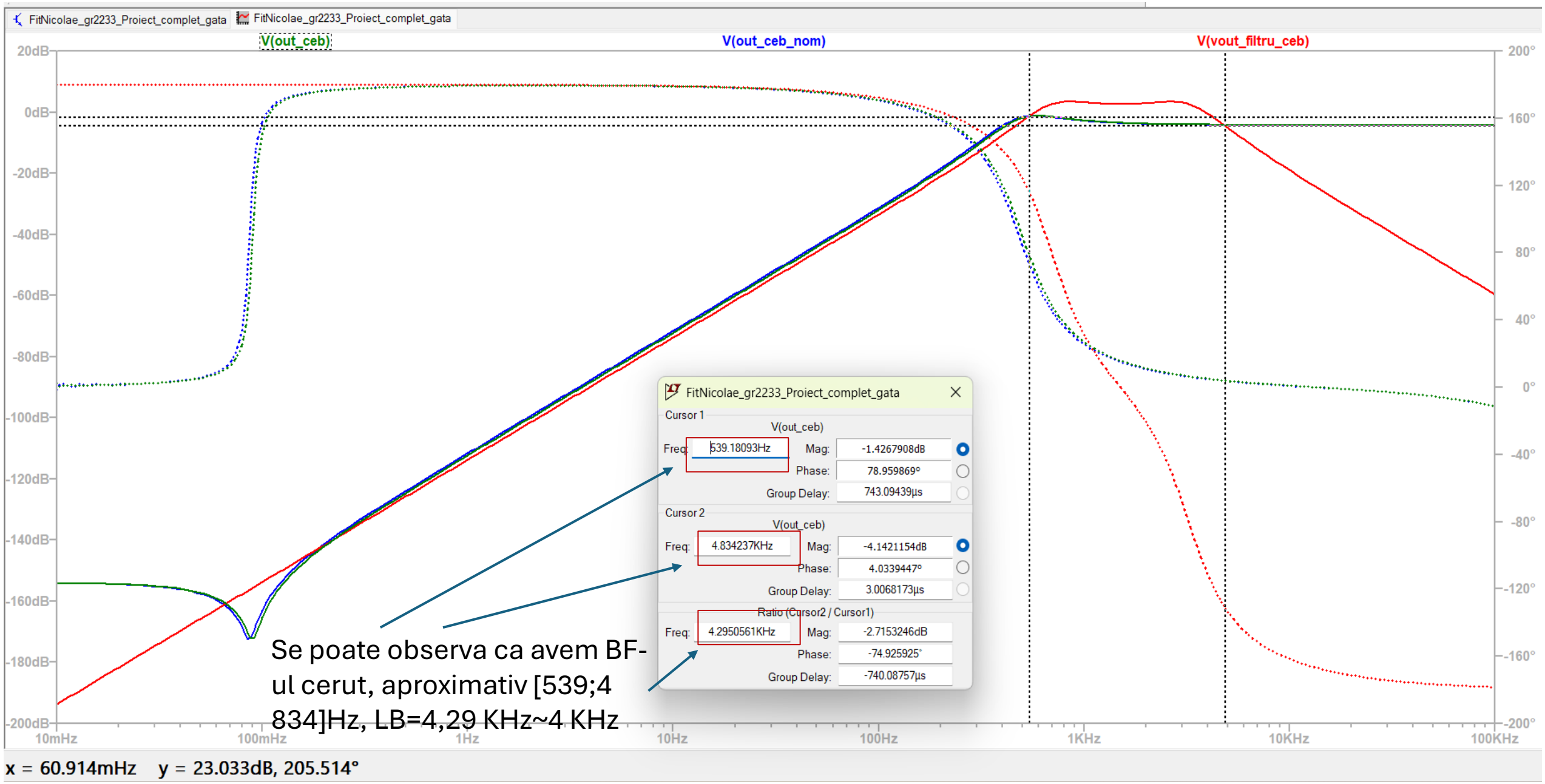

Se poate observa ca avem BF-ul cerut, aproximativ [539;4 834]Hz, LB=4,29 KHz~4 KHz

Semnalul de treapta

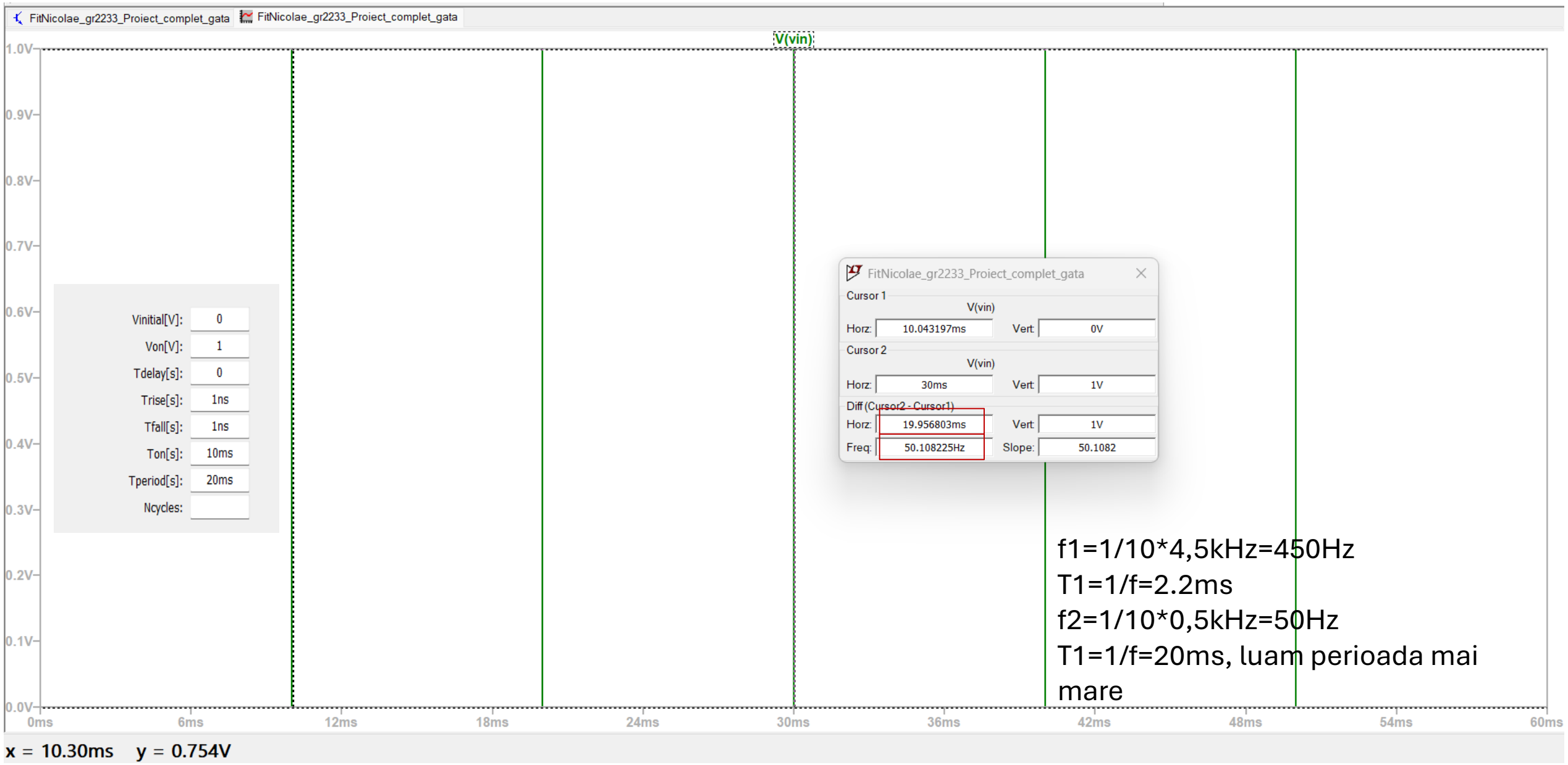

Comparare raspuns treapta Cebasev matematic- surse modelate

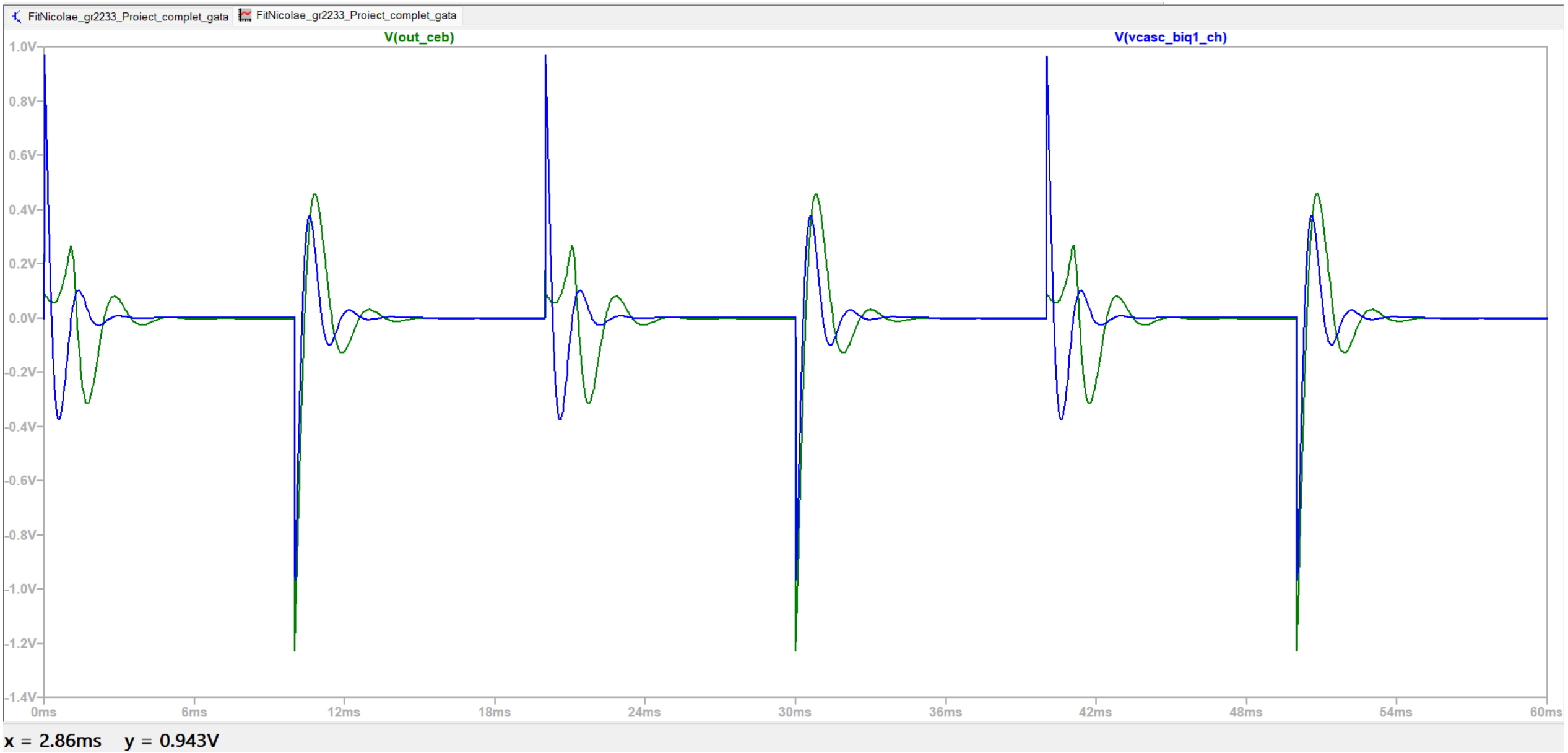

Comparare raspuns treapta Cebasev nominal- surse modelate

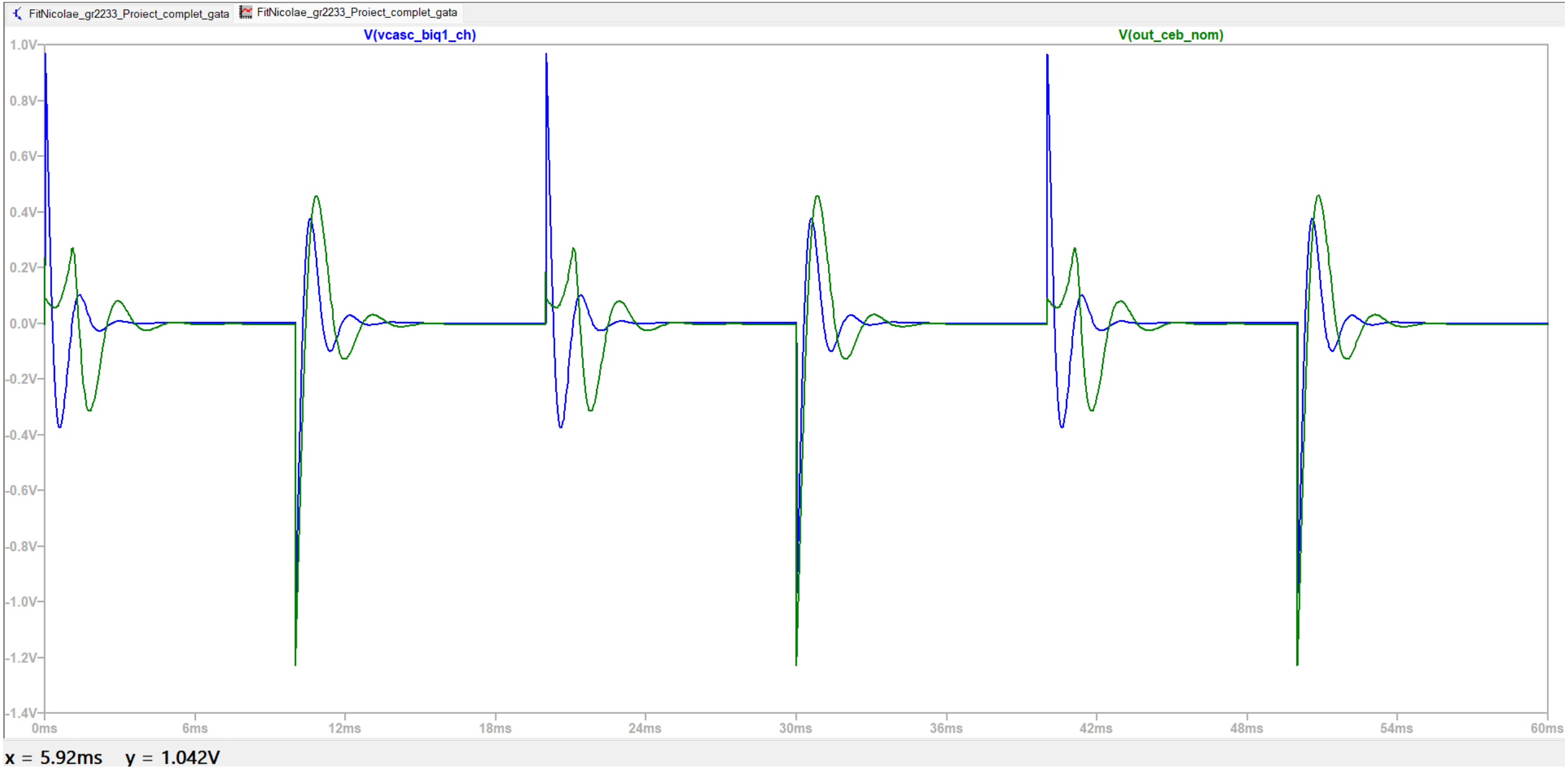

Comparare raspuns treapta Cebasev nominal- matematic

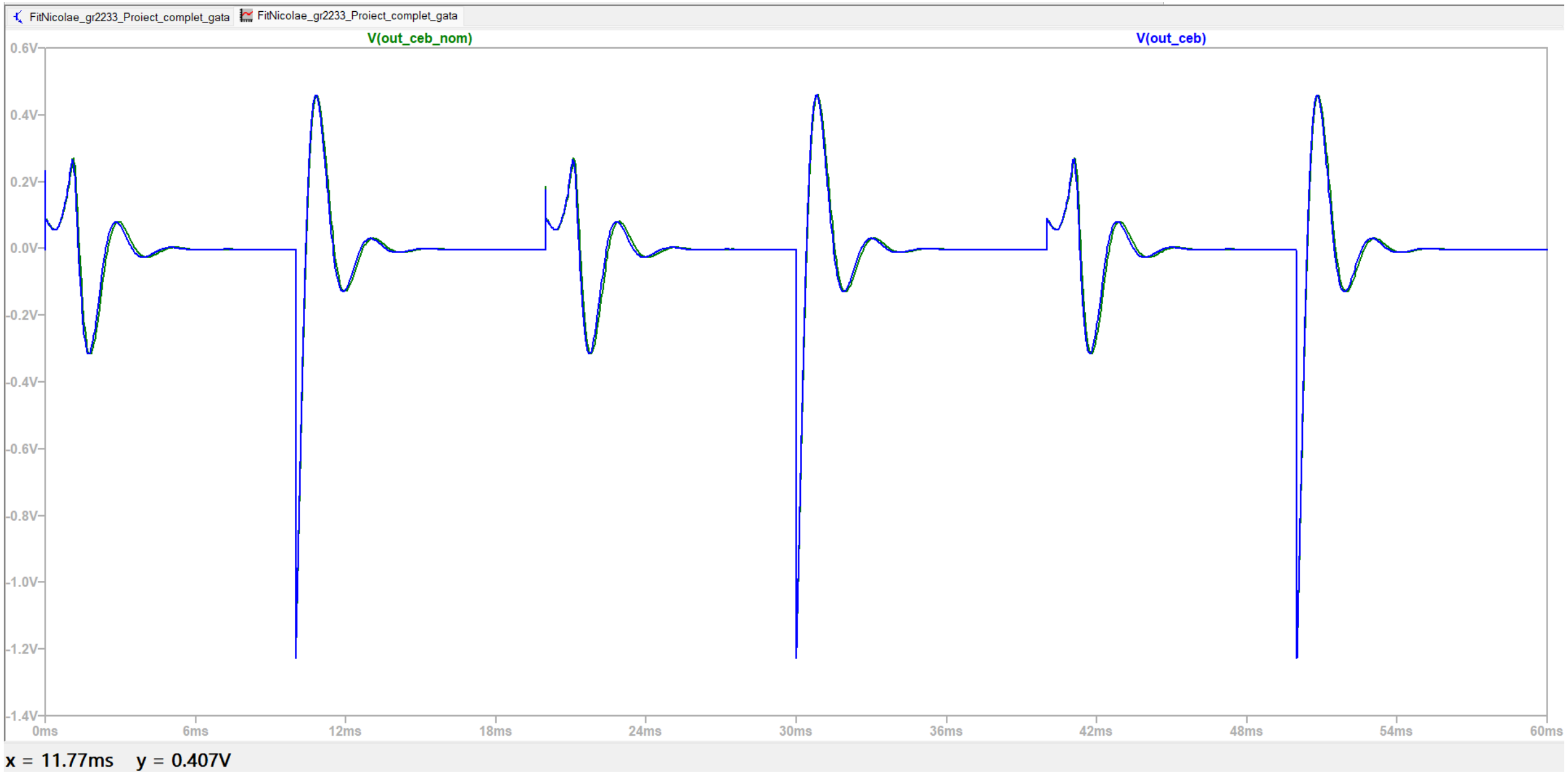

Bibliografie

- Analog Devices Teaching Material -> Linear Circuits Design Handbook
- Analog Filters
- Op_Amps_Everyone
- Relatii dimensionare pentru KHN: https://youtu.be/PHI5nr0eG0E?si=4JrpfBJCUJin31k6