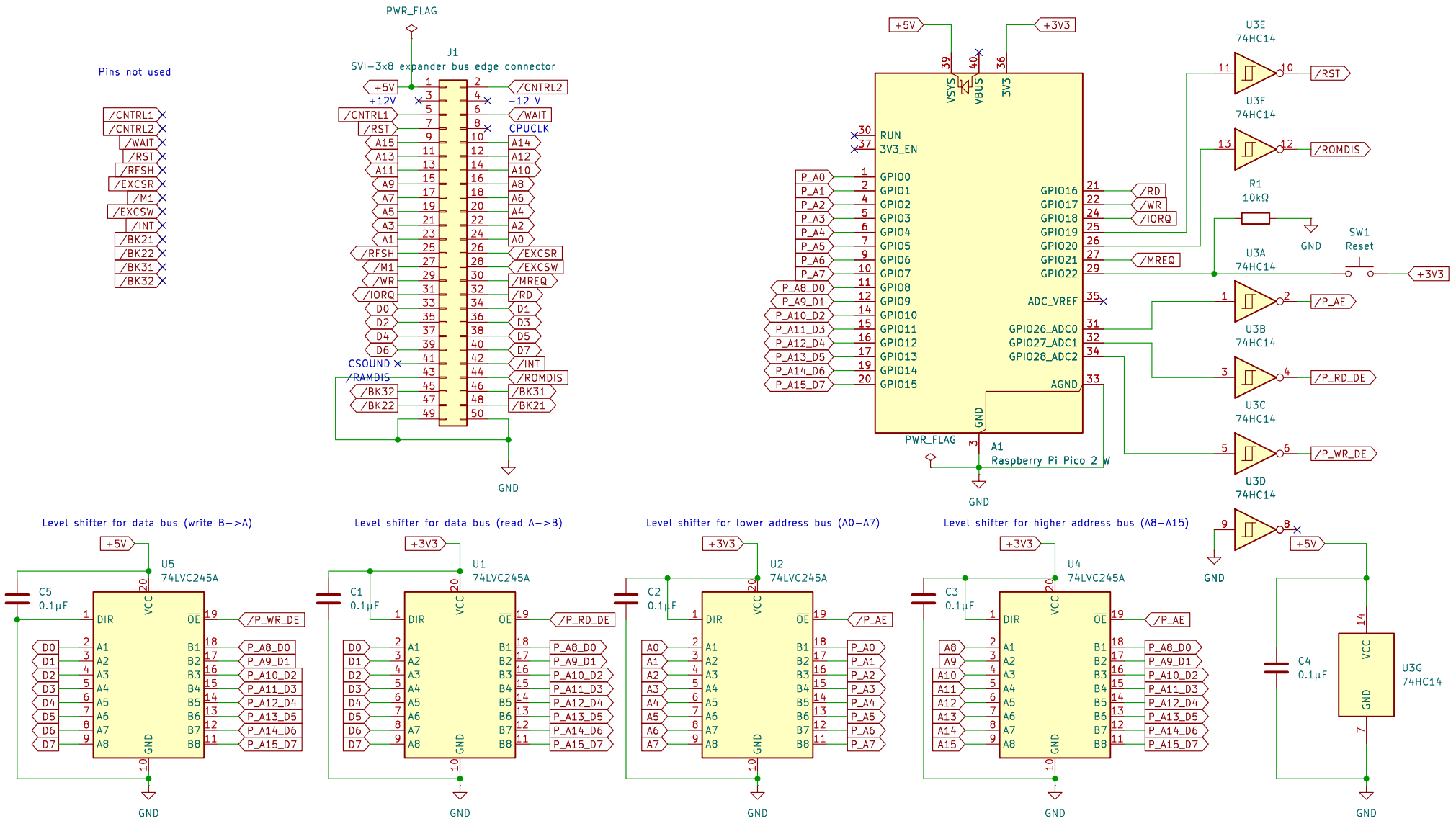

https://github.com/fitch/SVI-3x8-PicoExpander

Markus Rautopuro

Sheet: /

File: SVI-3x8-PicoExpander.kicad_sch

Title: SVI-3x8 PicoExpander

Size: A4	Date: 2025-08-04	**Rev: 1.4**
KiCad E.D.A. 9.0.1		Id: 1/1