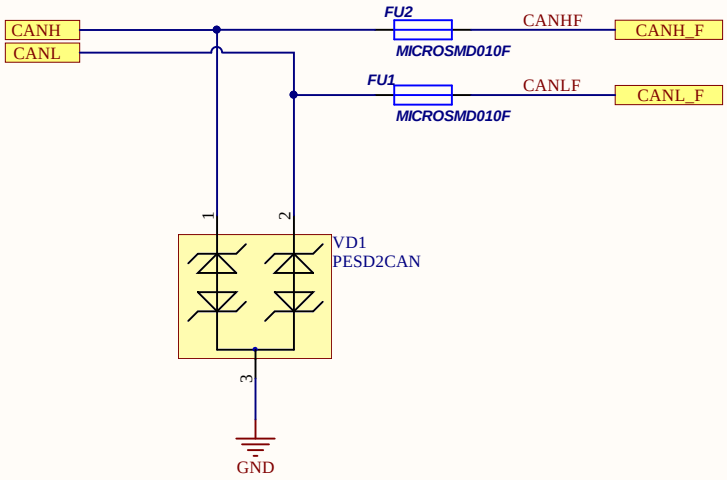

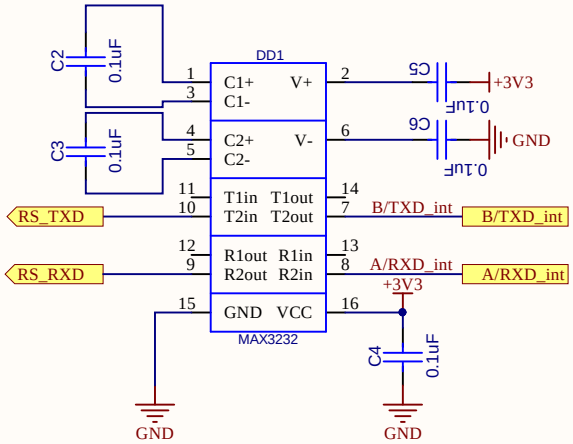

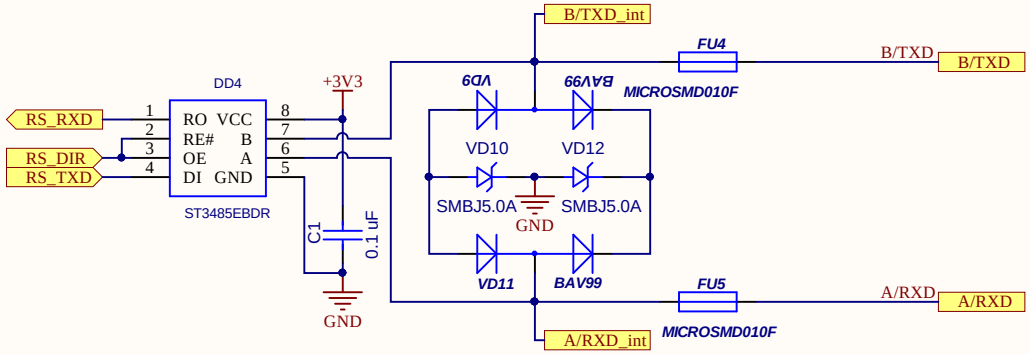

Title		
Size A4	Number	Revision
Date: 28.03.2018		Sheet of
File: E:\Projects_Files\..\Interfaces.SchDoc		Drawn By:

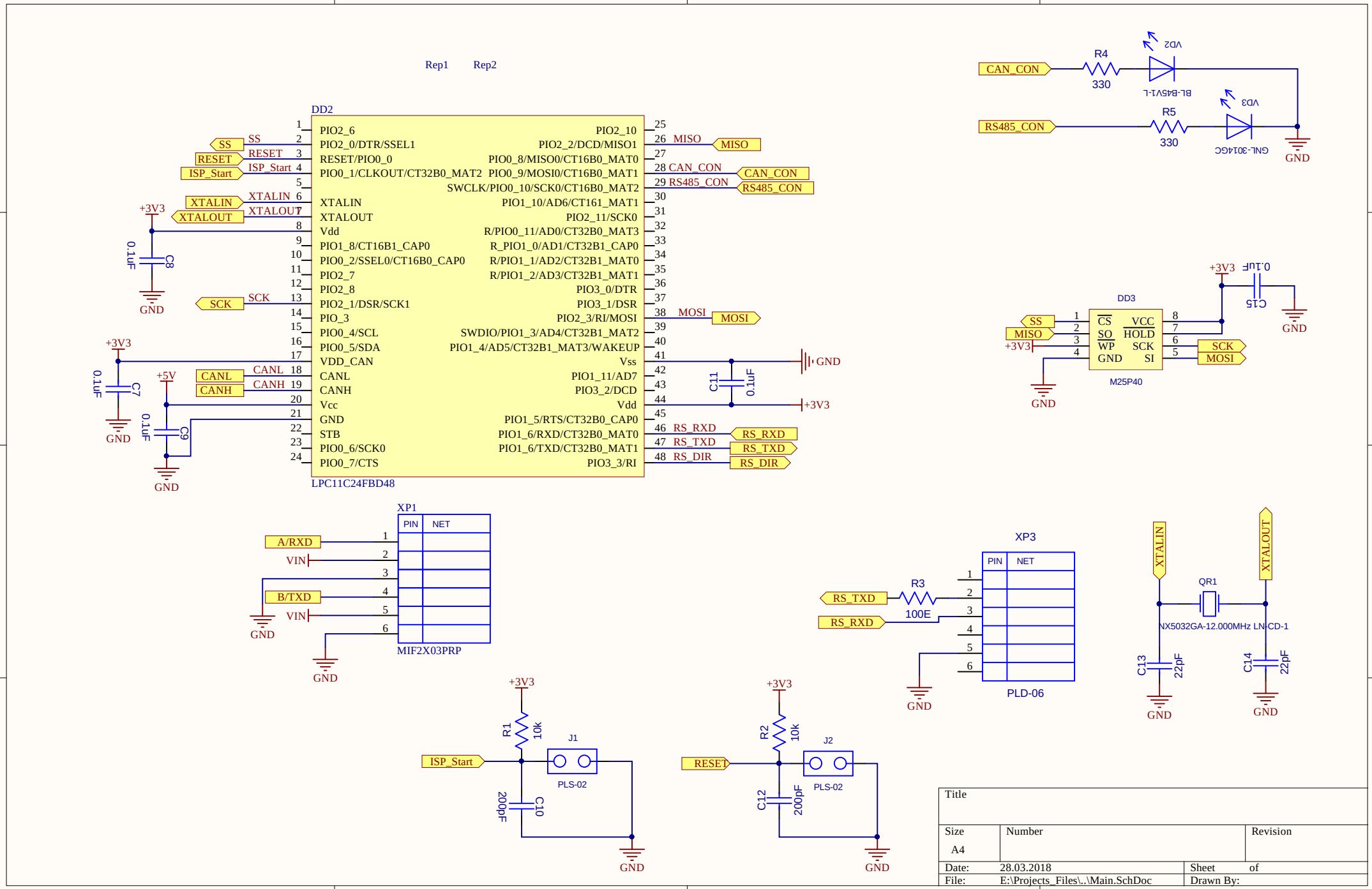
Rep1
Rep2
DD2
LPC11C24FBD48
PIO2_6
PIO2_0/DTR/SSEL1
RESET/PIO0_0
PIO0_1/CLKOUT/CT32B0_MAT2
XTALIN
XTALOUT
Vdd
PIO1_8/CT16B1_CAP0
PIO0_2/SSEL0/CT16B0_CAP0
PIO2_7
PIO2_8
PIO2_1/DSR/SCK1
PIO_3
PIO0_4/SCL
PIO0_5/SDA
VDD_CAN
CANL
CANH
Vcc
GND
STB
PIO0_6/SCK0
PIO0_7/CTS
PIO2_10
PIO2_2/DCD/MISO1
PIO0_8/MISO0/CT16B0_MAT0
PIO0_9/MOSI0/CT16B0_MAT1
SWCLK/PIO0_10/SCK0/CT16B0_MAT2
PIO1_10/AD6/CT161_MAT1
PIO2_11/SCK0
R/PIO0_11/AD0/CT32B0_MAT3
R_PIO1_0/AD1/CT32B1_CAP0
R/PIO1_1/AD2/CT32B1_MAT0
R/PIO1_2/AD3/CT32B1_MAT1
PIO3_0/DTR
PIO3_1/DSR
PIO2_3/RI/MOSI
SWDIO/PIO1_3/AD4/CT32B1_MAT2
PIO1_4/AD5/CT32B1_MAT3/WAKEUP
Vss
PIO1_11/AD7
PIO3_2/DCD
Vdd
PIO1_5/RTS/CT32B0_CAP0
PIO1_6/RXD/CT32B0_MAT0
PIO1_6/TXD/CT32B0_MAT1
PIO3_3/RI
SS
RESET
ISP_Start
XTALIN
XTALOUT
SCK
CANL
CANH
MISO
CAN_CON
RS485_CON
MOSI
RS_RXD
RS_TXD
RS_DIR
+3V3
+5V
GND
C7
0.1uF
C8
0.1uF
C9
0.1uF
C11
0.1uF
XP1
PIN
NET
A/RXD
VIN
B/TXD
MIF2X03PRP
R1
10k
J1
PLS-02
C10
200pF
R2
10k
J2
PLS-02
C12
200pF
R3
100E
XP3
PLD-06
QR1
NX5032GA-12.000MHz LN-CD-1
C13
22pF
C14
22pF
R4
330
VD2
BL-B45V1-L
R5
330
VD3
GNL-3014GC
DD3
M25P40
CS
SO
WP
GND
VCC
HOLD
SCK
SI
C15
0.1uF
Title
Size
A4
Number
Revision
Date:
28.03.2018
Sheet
of
File:
E:\Projects_Files\..\Main.SchDoc
Drawn By:

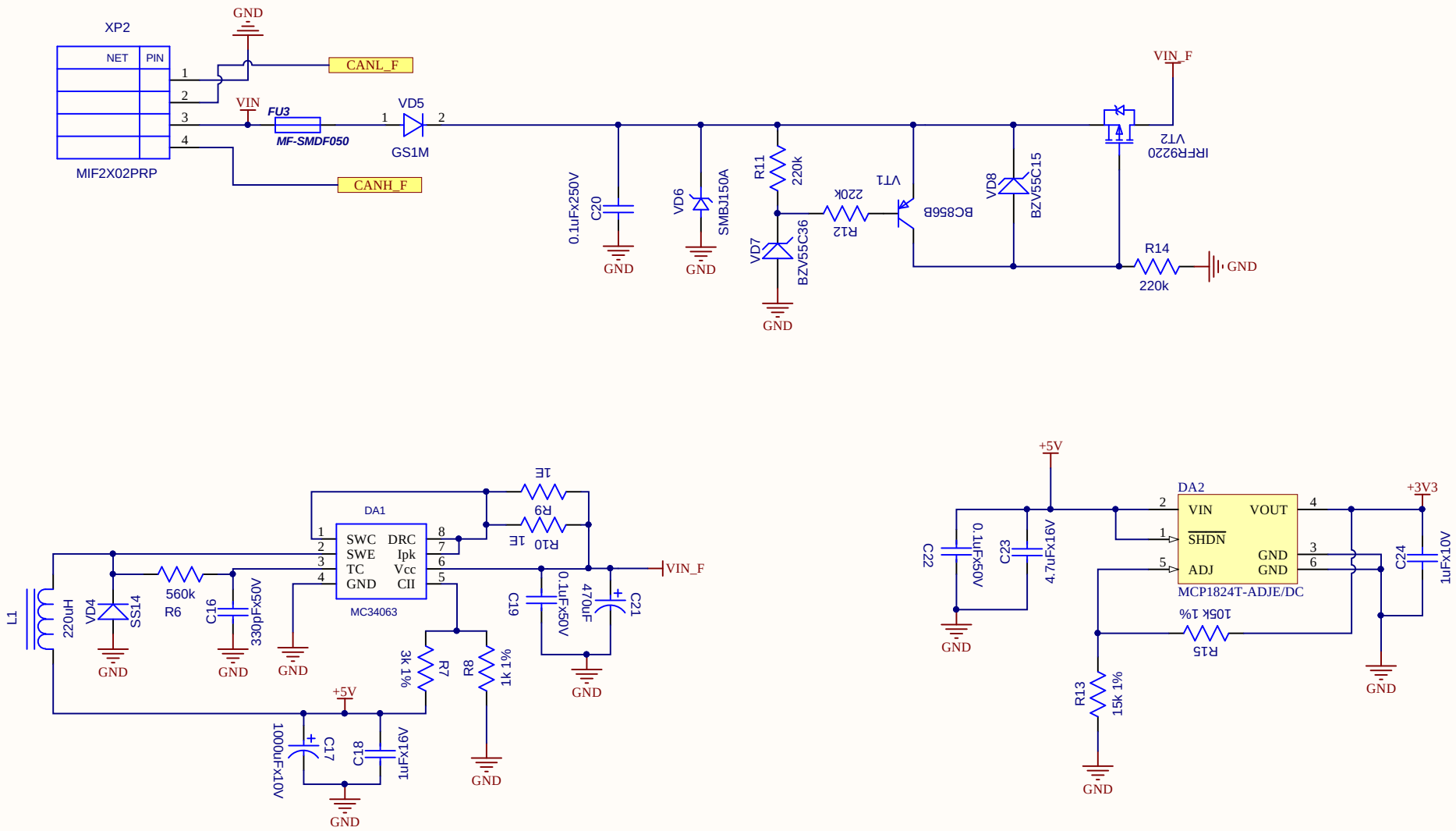

Title		
Size A4	Number	Revision
Date: 28.03.2018	Sheet of	
File: E:\Projects_Files\..\Power.SchDoc	Drawn By:	