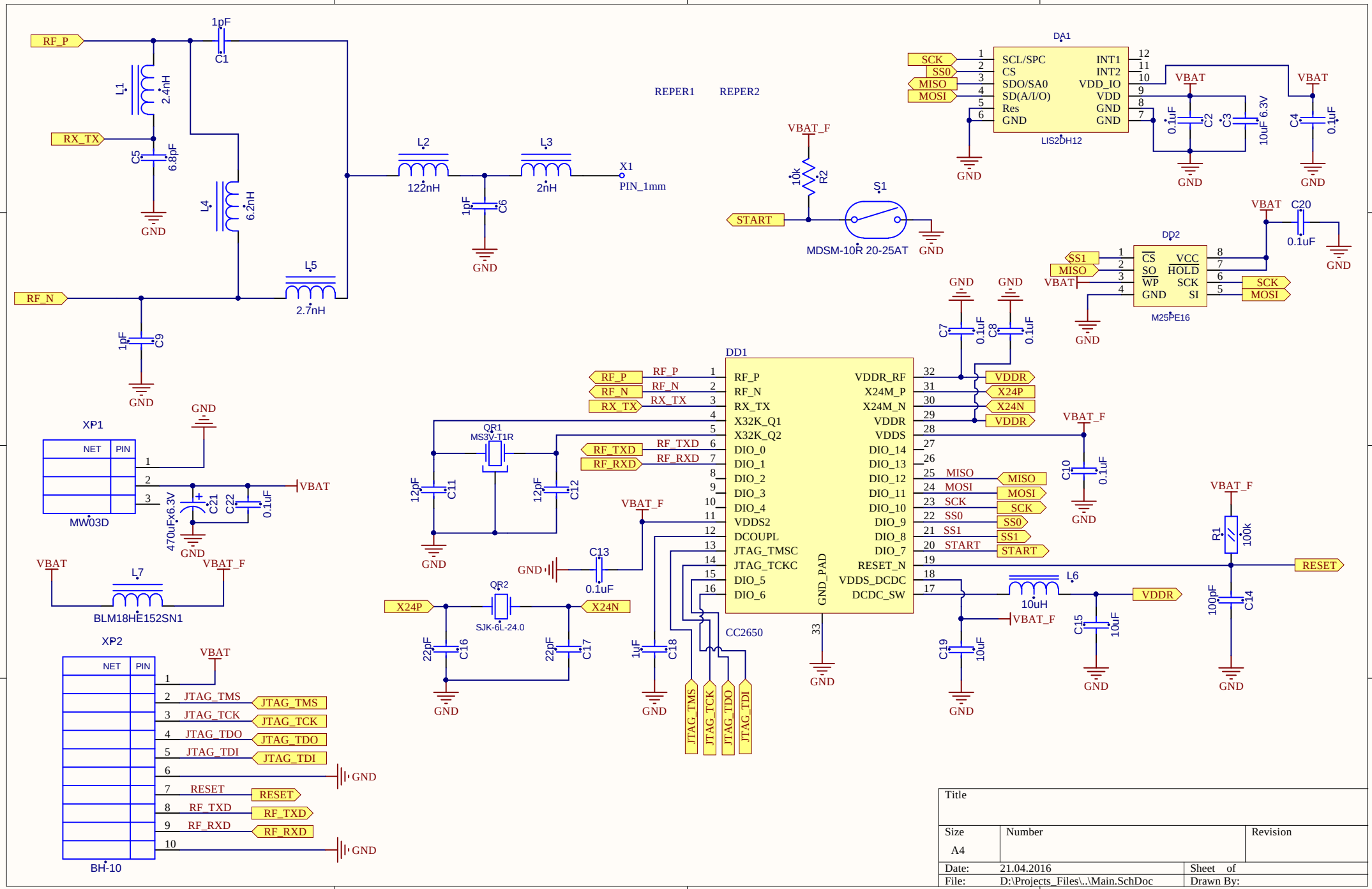

Title		
Size A4	Number	Revision
Date: 21.04.2016		Sheet of
File: D:\Projects_Files\..\Main.SchDoc		Drawn By: