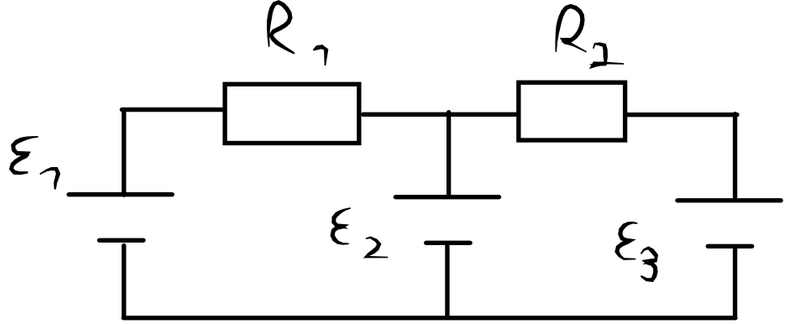

$\xrightarrow{I}$

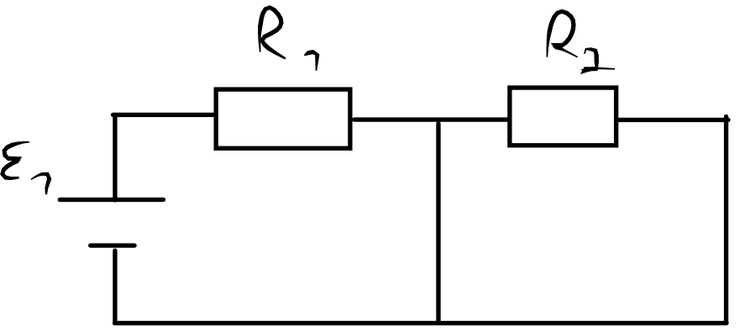

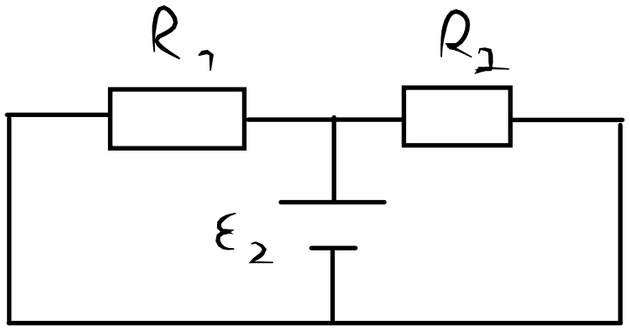

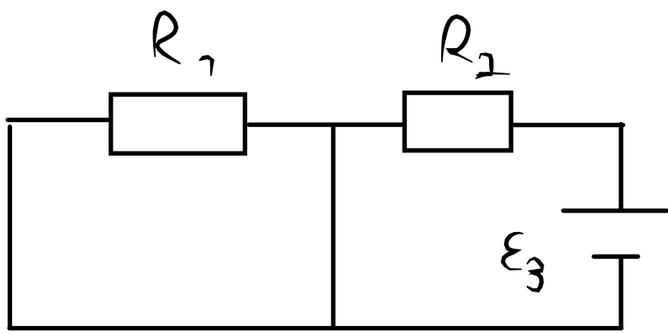

$$I_{R_1} = \frac{\varepsilon_1}{R_1}$$

$$I_{R_1} = \frac{\varepsilon_2}{R_1}$$

$$I_{R_1} = 0$$

$$I_{R_1} = \frac{\varepsilon_1}{R_1} - \frac{\varepsilon_2}{R_1}$$

Created with iDroo.com