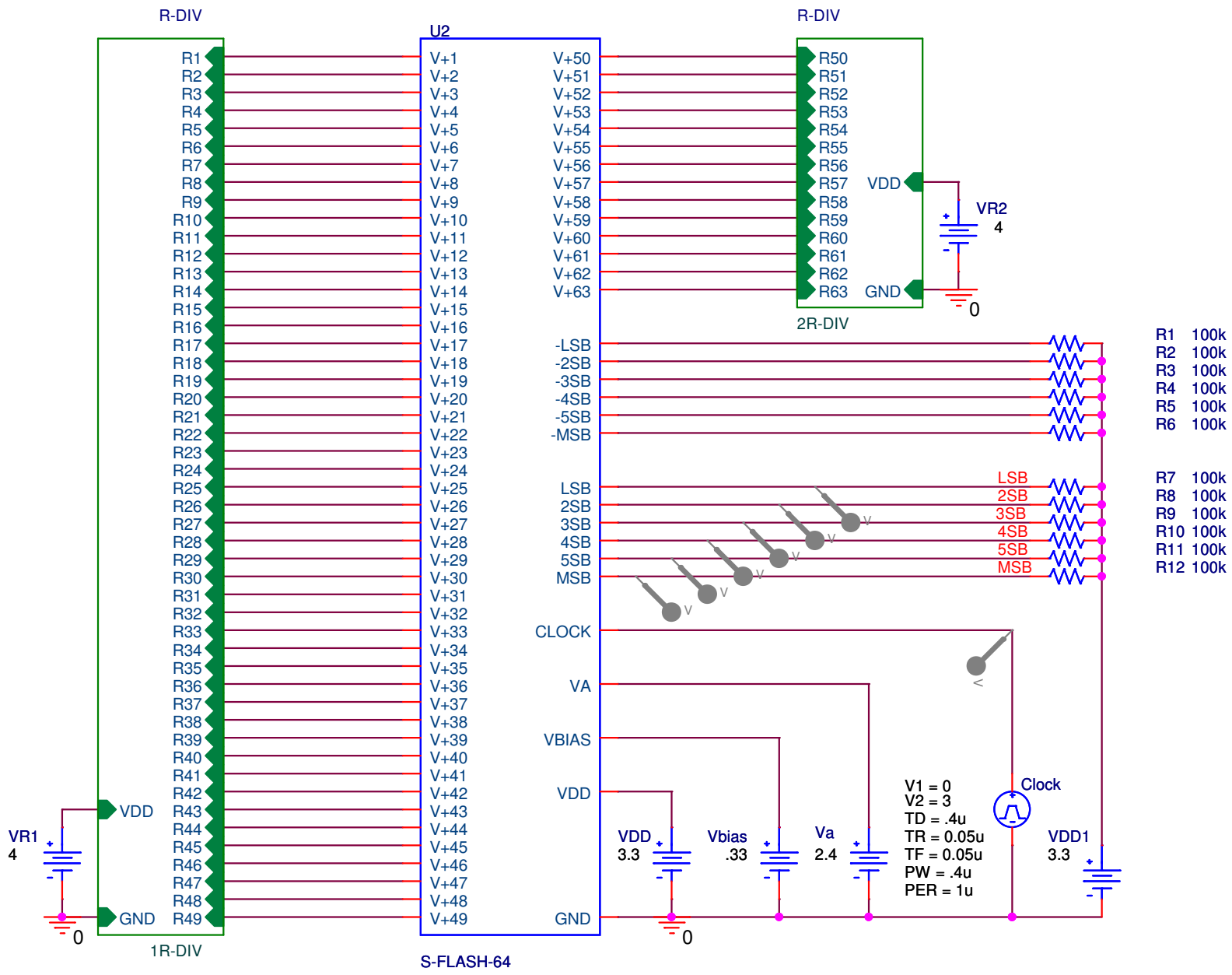


| | | |
|---|---|---|
| Title <Title> | | |
| Size A | Document Number <Doc> | Rev <RevCod |
| Date: Friday, March 26, 2010 | Sheet 1 of 1 | |