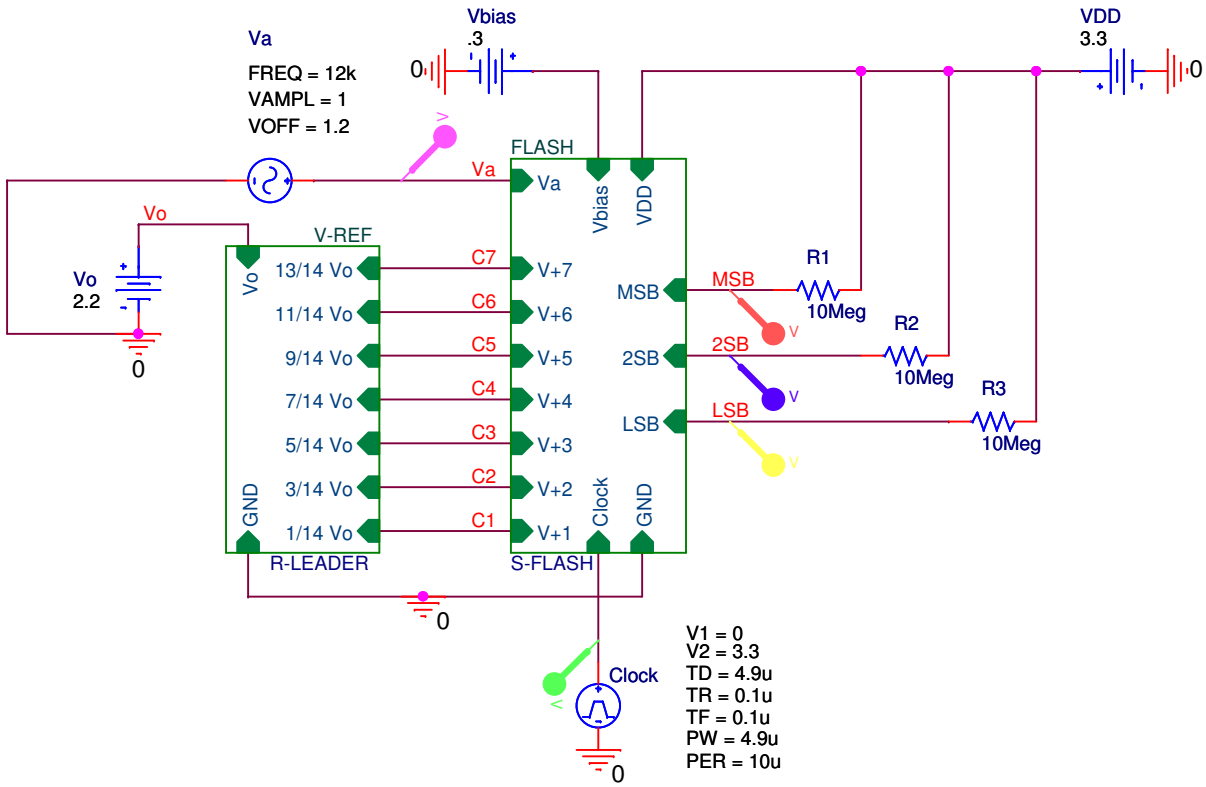

Title	<Title>	
Size A	Document Number <Doc>	Rev 02
Date: Tuesday, November 10, 2009	Sheet 1 of 1	