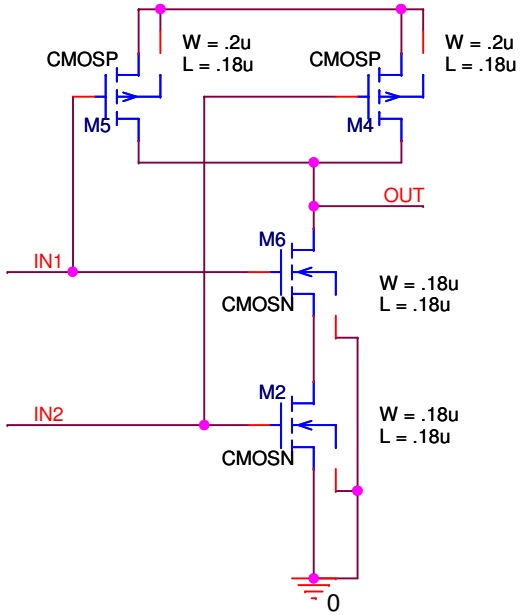

Title <Title>		
Size A	Document Number <Doc>	Rev <RevCode>
Date: Saturday, February 13, 2010	Sheet 1 of 1	