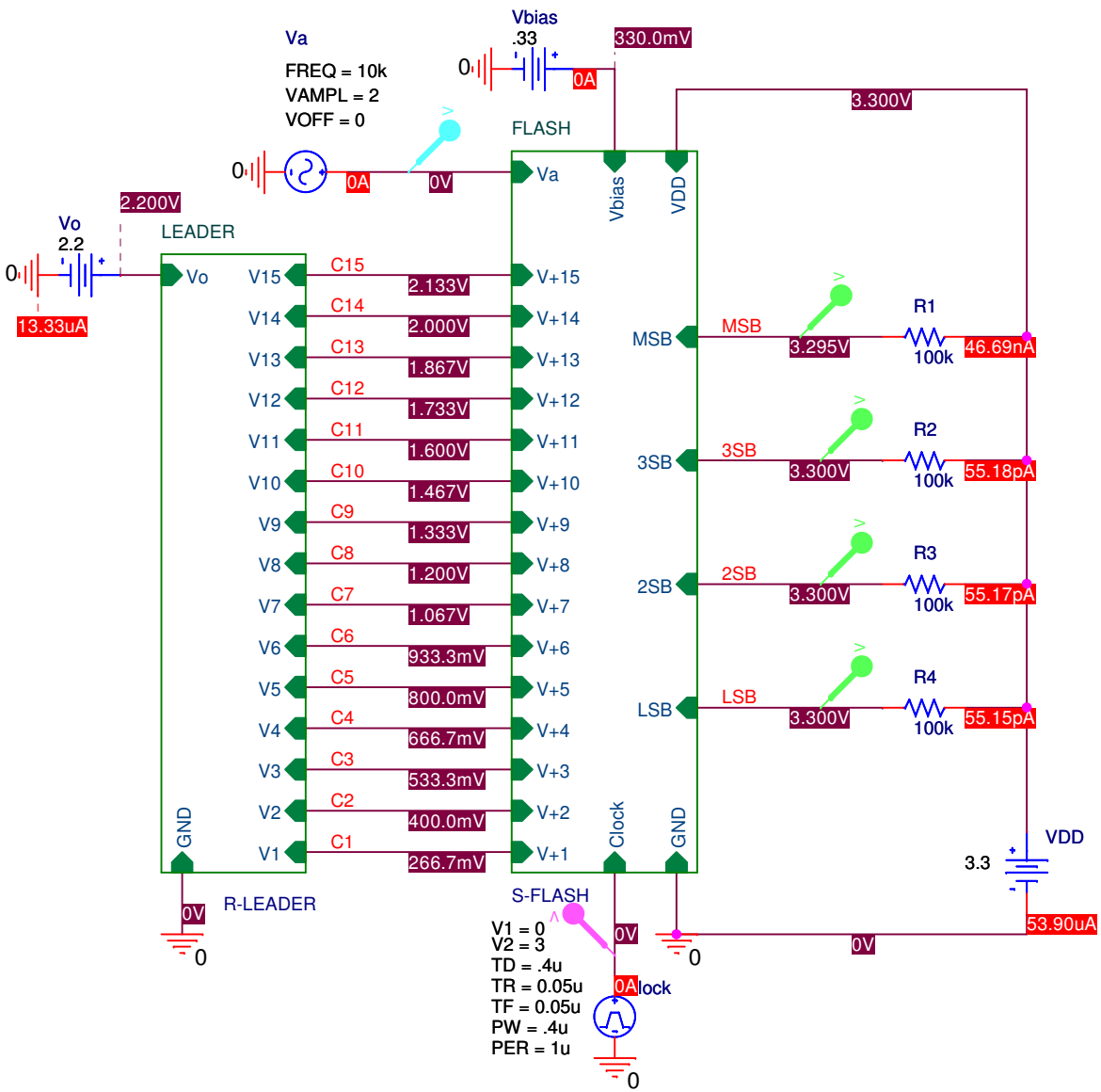

Title	Decoder 4 bits alimentado con 3.3V	
Size A	Document Number <Doc>	Rev 01
Date: Friday, December 04, 2009	Sheet 1 of 1	