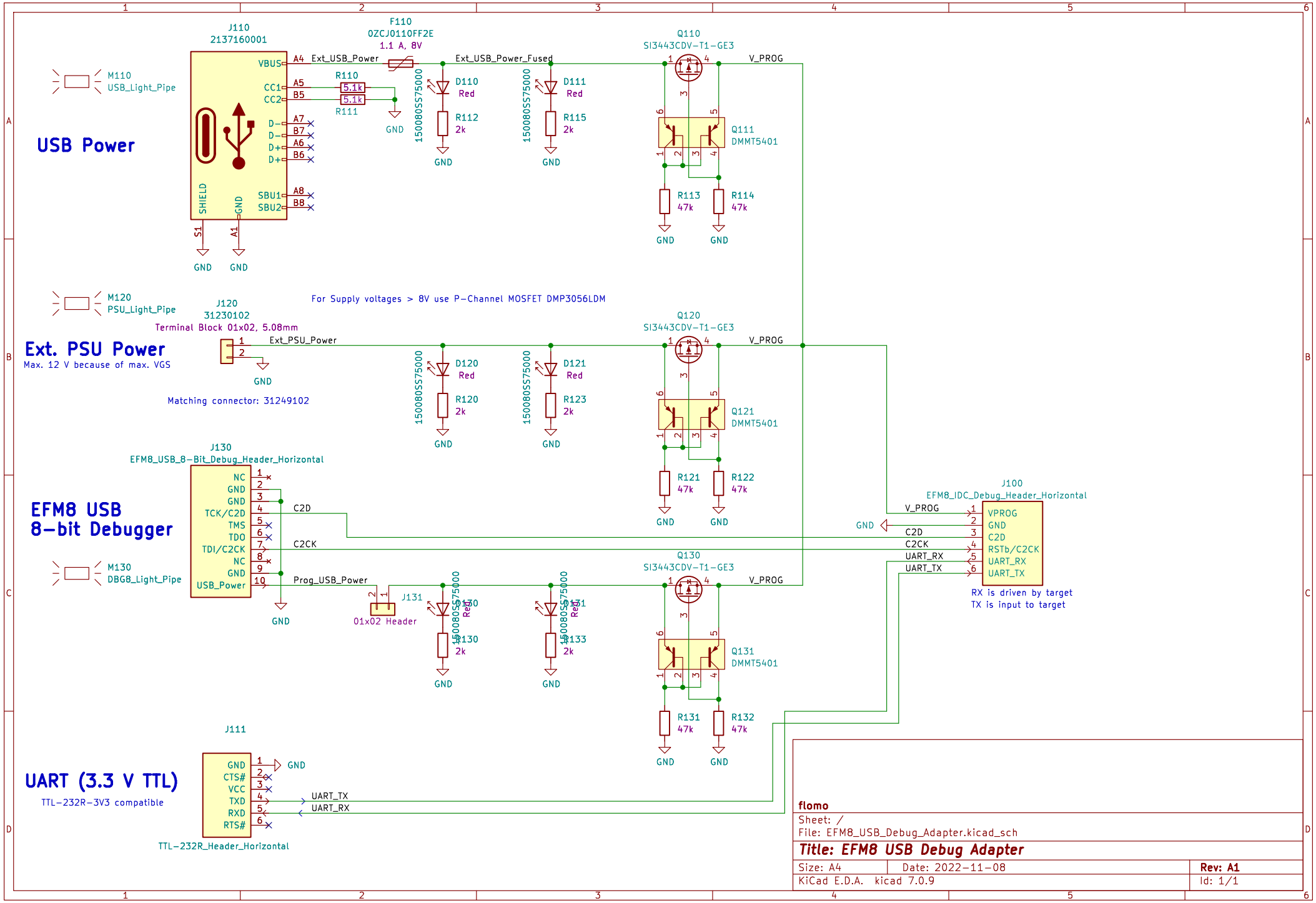

flomo

Sheet: /

File: EFM8_USB_Debug_Adapter.kicad_sch

Title: EFM8 USB Debug Adapter

Size: A4	Date: 2022−11−08	Rev: A1
KiCad E.D.A. kicad 7.0.9		Id: 1/1