Q7 & Q8 : cascode circuit

Q9 & Q11 : mirror circuit

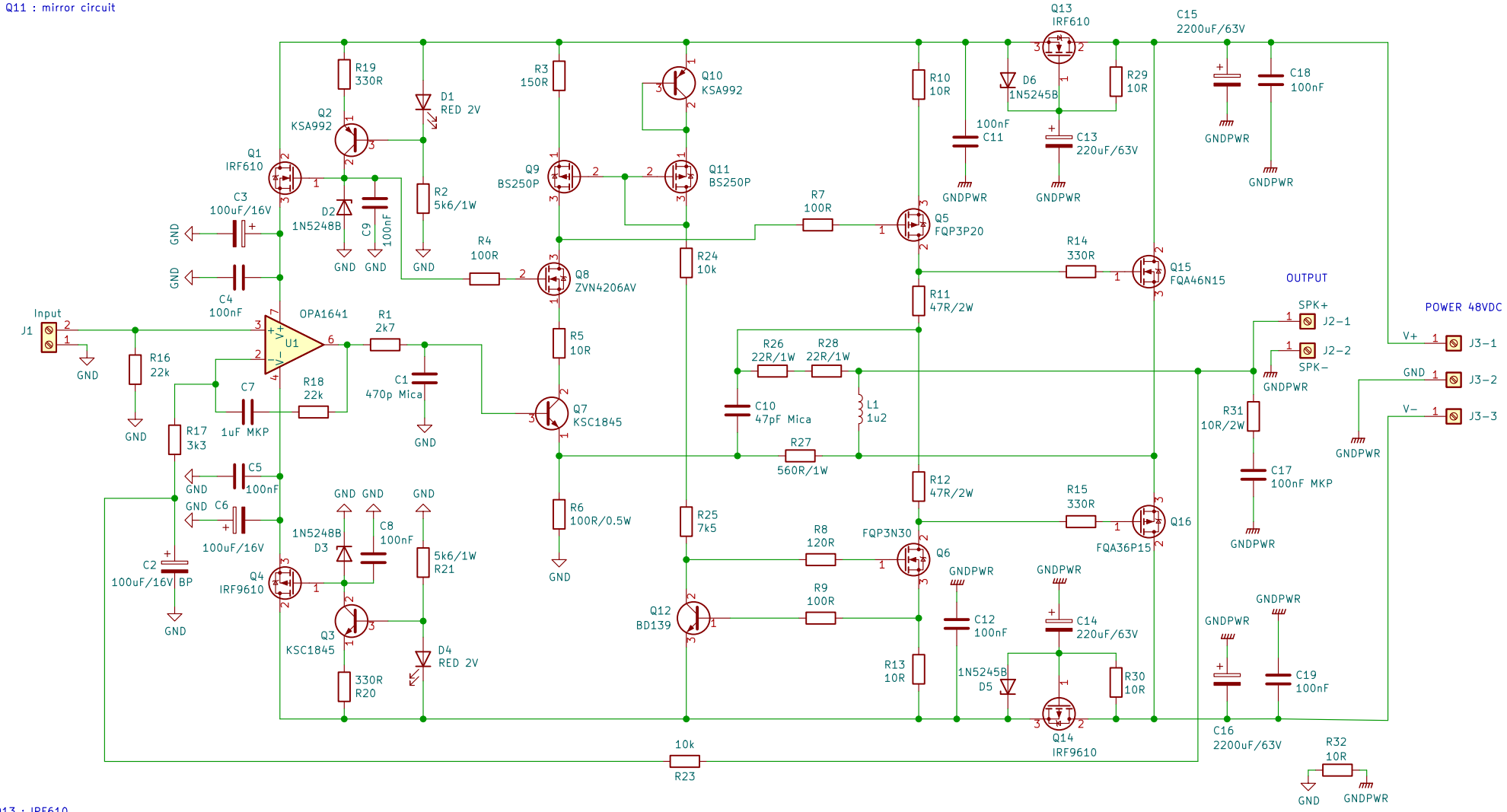

Q1, Q13 : IRF610

Q2, Q10 : KSA992

Q4, Q14 : IRF9610

Q3, Q7 : KSC1845

Q5 : FQP3P20

Q6 : FQP3N30

Q8 : ZVN4206AV or 2N7000 (not TA)

Q12 : BD139

Q9, Q11 : BS250P (Diodes Inc) or ZVP2106A

Q15 : FQA46N15

Q16 : FQA36P15

L1 : 22 turns of a 1mm copper insulated wire wound around an 8mm tube.

This will give you a coil of 10x20mm (see picture on github repository).

C13, C14 : Panasonic FC

100nF capacitor : Wima MKS2

0.5W, 1W resistor : Vishay PR01

2W resistor : Vishay PR02

U1 : OPA1641 or OPA1611

D1, D4 : LED RED 2V

D2, D3 : 1N5248B

D5, Q6 : 1N5245

R26, R27, R28 : If possible use non inductive 1W resistor (Vishay Dale).

C15, C16 : Vishay 048 RML (MAL204858222E3) or Nichicon UFW (UFW1J222MHD).

C7 : Use MKP capacitor (MKP1F041005I00JYSD or MKP2D041001N00JSSD).

C17 : Use MKP capacitor (FKP3C031004C00JSSD or MKP1F031004B00KI00).

C2 : Use bipolar capacitor if possible (Nichicon Muse UES1A101MPM).

C1, C10 : Use Mica CDE CD15 or Polystyrene capacitor.

C3, C6 : Elna Silmic II (RFS-16V101MH3#5) or Nichicon Muse (UES1A101MPM1TD)

J2 and J3: FASTON 250 PCB connector (TE Connectivity 63849-1)

Q17 a QUAD405 audiophile approach

Modified by Stef for the Q17-Mini project

by eng. Tiberiu Vicol

Sheet: /

File: Q17-Mini.kicad_sch

Title: Q17-Mini Amplifier

Size: A4	Date: 2021-12-09	**Rev: 1.1.2**
KiCad E.D.A. kicad (6.0.0-rc1-343-g73b39e836d)		Id: 1/1