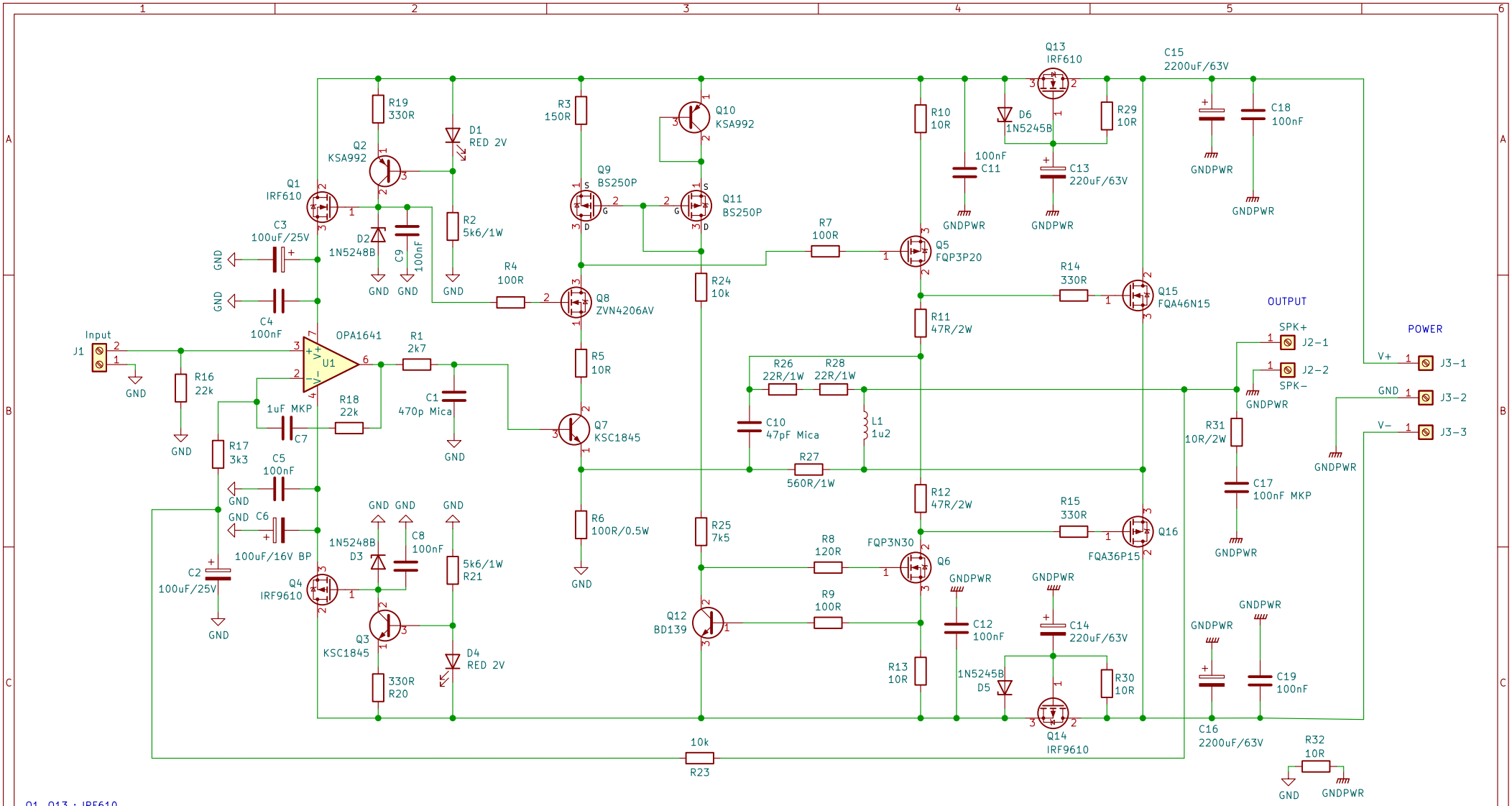

Q1, Q13 : IRF610
Q2, Q10 : KSA992
Q4, Q14 : IRF9610
Q3, Q7 : KSC1845
Q5 : FQP3P20
Q6 : FQP3N30
Q8 : 2N7000 (not TA) or ZVN4206AV
Q12 : BD139
Q9, Q11 : BS250P (Diodes Inc) or ZVP2106A
Q15 : FQA46N15
Q16 : FQA36P15

L1 : 22 turns of a 1mm copper insulated wire wound around an 8mm tube.
This will give you a coil of 10x20mm (see picture).

U1 : OPA1641 or OPA1611
D1, D4 : LED RED 2V
D2, D3 : 1N5248B
D5, Q6 : 1N5245

R27 : Use good low noise 1W resistor (CMF60560R00JKR6).
C15, C16 : The best choise is Vishay BC MAL204858222E3.
C7 : Use good MKP capacitor (MKP1F041005I00JYSD).
C17 : Use good MKP capacitor (FKP3C031004C00JSSD or MKP1F031004B00KI00).
C6 : Use bipolar capacitor if possible (UES1C101MPM1TD).
C1 and C10 : Use good CDE Mica or Polystyrene capacitor.

Q17 a QUAD405 audiophile approach

Modified by Stef for the Q17-Mini project
by eng. Tiberiu Vicol

Sheet: /
File: Q17-Mini.kicad_sch

Title: Q17-Mini Amplifier

Size: A4	Date: 2021-11-29	**Rev: 1.0.9**
KiCad E.D.A. kicad (6.0.0-rc1-168-g698a668af7)		Id: 1/1