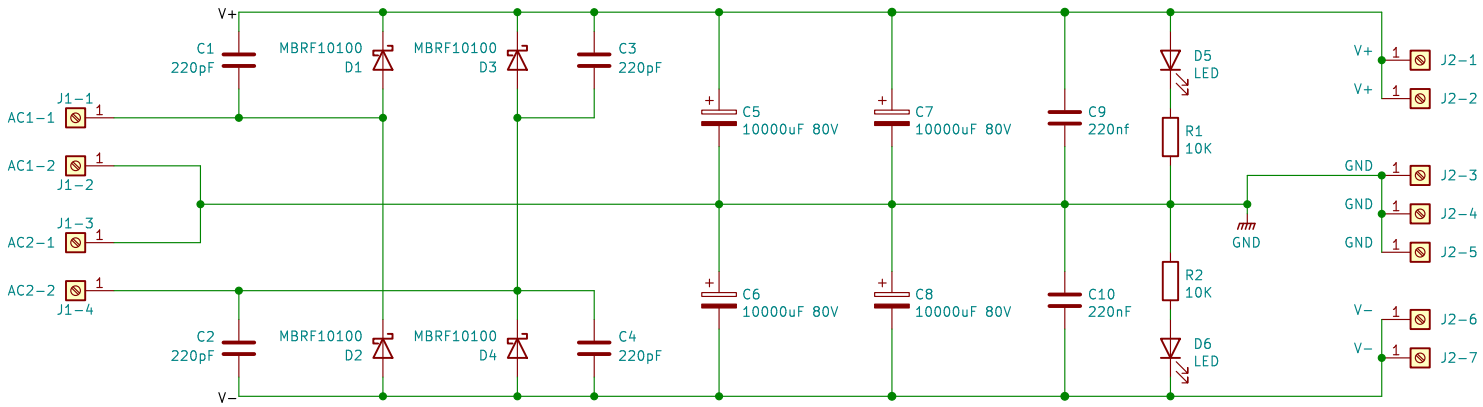

HS1 CSM221-12AE
HS2 CSM221-12AE
HS3 CSM221-12AE
HS4 CSM221-12AE

by stef

Sheet: /
File: Q17-PSU-MONO.kicad_sch

Title: Q17 mono Power Supply Universal

Size: A4	Date: 2024-04-14	**Rev: 1.0**
KiCad E.D.A. 8.0.1		Id: 1/1