Q7, Q8 : cascode circuit (R3 = current setup, need to adjust R5/R6)
Q9, Q11 : current mirror circuit
R23, R17, C2 : DC servo
Q12 : temperature compensation

Measure across R3 for mirror ccs current.
Measure across R13 for class A stage bias.

Do not power on the board without opamp.

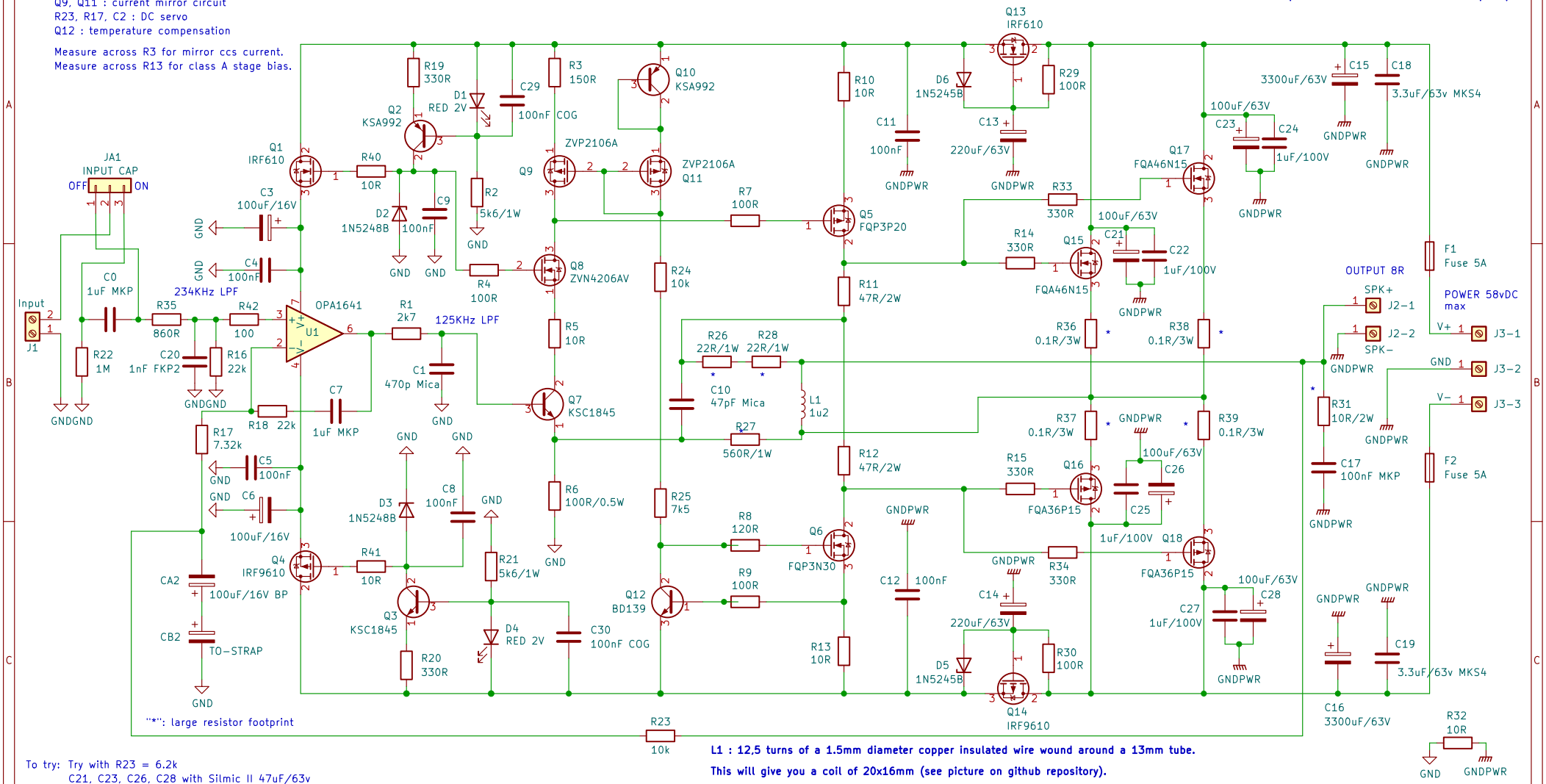

"*": large resistor footprint

L1 : 12,5 turns of a 1.5mm diameter copper insulated wire wound around a 13mm tube.

This will give you a coil of 20x16mm (see picture on github repository).

To try: Try with R23 = 6.2k
C21, C23, C26, C28 with Silmic II 47uF/63v

U1 : OPA1641 (JFET) or OPA1611 (BIPOLAR)
Q1, Q13 : IRF610
Q2, Q10 : KSA992
Q4, Q14 : IRF9610
Q3, Q7 : KSC1845 or 2SC2240
Q5 : FQP3P20
Q6 : FQP3N30
Q8 : ZVN4206AV or 2N7000 (not TA)
Q12 : BD139
Q9, Q11 : ZVP2106A or BS250P (Diodes Inc)
Q15, Q17 : FQA46N15
Q16, Q18 : FQA36P15

C0 : CDE 1uF 100v 930C1W1K-F
C15, C16 : Vishay 256 PMG-SI
C18, C19 : Wima MKS4C043303G
C3, C6 : ELNA Silmic II RFS 100uF 16V
100nF : Wima MKS2
D1, D4 : LED RED 2V
D2, D3 : 1N5248B
D5, D6 : 1N5245
1W resistor : Vishay PR01
2W resistor : Vishay CCF02 or PR02
R26, R28 : TE Connectivity H4P22RFZA
C15, C16 : Nichicon UFW (UFW1J222MHD) or Vishay 048 (MAL204858222E3) or Wurth WCAP-ATG8 (860010781028).

1/4Watt, 1/2Watt resistor : Vishay MRS25 or CCF07
R27 : 560R 1W Ohmite WNB560FET
R31 10R 2W Ohmite WNC10RFE
R36, R37, R38, R39 : Noble RGC5 or KOA BPR58 0.1R 5W (white sugar)
C2 : Bipolar capacitor Nichicon Muse UES1A101MPM.
C1 : 470nF Wima FKP2D004701D00HSSD or KEMET PFR5471H100J11L4.
C4, C5, C29, C30 SMD : 100nF COG TDK C3216C0G1H104J160AA
C3, C5, C13, C14, C21, C23, C26, C28 : Panasonic FC
C7 : 1uF Wima MKP2D041001N00JSSD or MKS4B041002C00JF00.
C10 : 470pF Mica CDE CD15FD471J03F or Polystyrene capacitor.
C10 : 47pF Mica CDE CD15FD471J03F or Polystyrene capacitor.
C20 : 1nF Wima FKP2C011001D00HSSD or Vishay BFC237085102.
J2 and J3: FASTON 250 PCB connector (TE Connectivity 63849-1)

For input sensibility at 1.5v: R17 = 7K32
For input sensibility at 0.750v: R17 = 3K3

Exicon ECW laterals:
R11,R12 = 10R 2W, R14 = 510R and R15 = 390R

Q17 a QUAD405 audiophile approach

Modified by Stef for the Q17-P2 project
by eng. Tiberiu Vicol

Sheet: /
File: Q17-P2.kicad_sch

Title: Q17-P2 Amplifier

Size: A4	Date: 2022-02-05	**Rev: 1.0b10**
KiCad E.D.A. kicad (6.0.0-0)		Id: 1/1