Q7, Q8 : Erno Borbely cascode
Q9, U2 : Wilson current mirror (CCS)
R23, R17, CA2 : DC servo
Measure across R3 for current mirror.
Measure across R13 for class A stage BIAS.
DC Offset at output > 1mV
DC Offset at output with R32 = 10R > 40mV

If you use a potentiometer in front of the amp, do not wire the LFE (not wire C20 and replace R33 by 100R).

Do not power on the board without opamp.

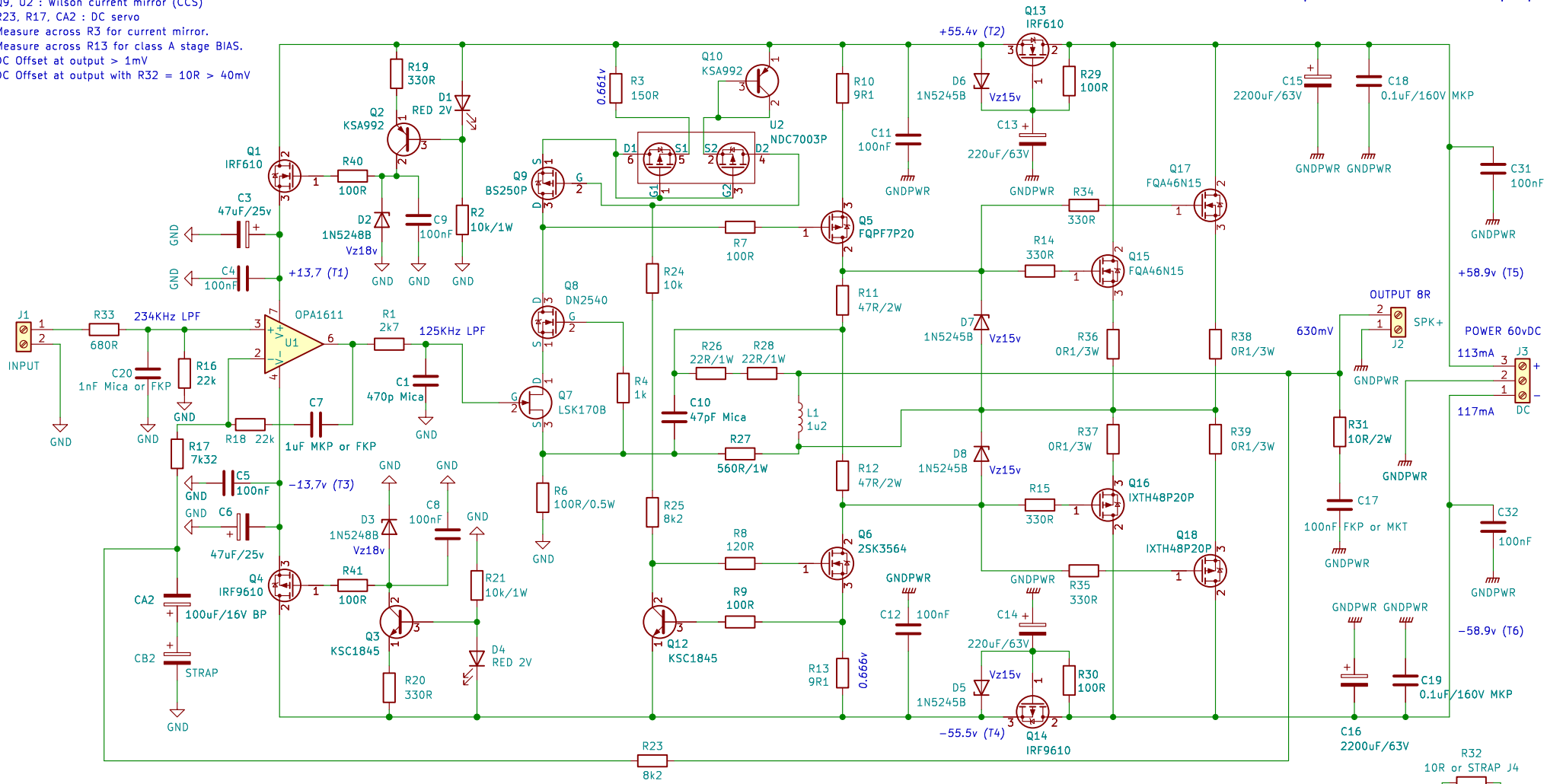

L1 : 12,5 turns of a 1.5mm diameter copper insulated wire wound around a 13mm tube.
This will give you a coil of 20x16mm (see picture on github repository).

Transformer for 2 boards: 2 x 44Vac 400−500VA

For input sensibility at 1.5v: R17 = 7.32k
For input sensibility at 0.750v: R17 = 3.3k
Remember to take off the resistors of 1W and more from the PCB when you solder them.

U1 : OPA1611 (BIPOLAR) or OPA828 (JFET)
U2: NDC7003P or PJS6839
Q1, Q13 : IRF610
Q2, Q10 : KSA992
Q3, Q12 : KSC1845
Q4, Q14 : IRF9610
Q5 : FQP3P20, FQPF7P20 or IRF9610 (isolator)
Q6 : FQP3N30, 2SK3564 or IRF610 (isolator)
Q7 : LSK170B (TH) or JFE150 (SMD SOT23−5)
Q8 : DN2540 or DN2535
Q9, Q11 : BS250P or ZVP2106A
Q15,Q17 : FQA46N15, IXFH50N85X or IRFP240 (isolator)
Q16, Q18 : FQA36P15, IXTH48P20P or IRFP9240 (isolator)

100nF capacitor : Wima MKS2
1W resistor : Vishay PR01
2W resistor : Vishay CCF02 or PR02
D1, D4 : LED RED 2V TLHR5400
D2, D3 : 1N5248B
D5, D6 : 1N5245
C3, C6 : Nichicon UKZ1E470MPM
C7 : 1uF CDE 930C1W1K−F
C13, C14 : Vishay MAL215058221E3
J1: KF127 or JST B2B−XH−A−GU

For resistor < 150R : sort then or use 1% range.
0.25W, 0.5W resistor : Vishay MRS25 or CCF07 or MB
R27 : 560R 1W 1% Ohmite WNB560FET or Vishay CMF60560R00JKR6
R26, R28 : 22R 1% 1W TE Connectivity H4P22RFZA
R36, R37, R38, R39 : 0R1 MOSX3CT631RR10J
C1 : 470pF CDE CD15FD471JO3F or polystyrene capacitor.
CA2 : Non polar capacitor Nichicon Muse UES1A101MPM.
C10 : 47pF Mica CDE CD15ED470JO3 or ceramic NPO.
C15, C16 : Nichicon LKG1J222MESABK or CDE SLP222M063C3P3.
C17 : 100nF capacitor FKP3C031004C00JSSD or MKT1822410255.
C18, C19 : 0.1uF/160V MKP Vishay MKP1839410164
C20 : 1nF CD15FA102JO3, FKP2C011001D00HSSD or 23PW210.

Q17 a QUAD405 audiophile approach

Modified by Stef for the Q17−TURBO project
by eng. Tiberiu Vicol

Sheet: /
File: Q17−TURBO.kicad_sch

Title: Q17−TURBO (P2) Amplifier

Size: A4	Date: 2023−10−28	**Rev: 1.2.9**
KiCad E.D.A. kicad 7.0.8		Id: 1/1