CS2303&2310: Operating Systems

School of Computer Science
Chentao Wu 吴晨涛
wuct@cs.sjtu.edu.cn

上海交通大學
SHANGHAI JIAO TONG UNIVERSITY

Download lectures

- ftp://public.sjtu.edu.cn
- User: wuct
- Password: wuct123456

- http://www.cs.sjtu.edu.cn/~wuct/os/

Chapter 6: Synchronization Tools

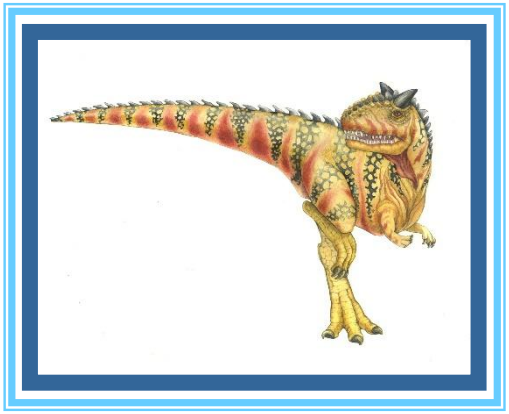

Chapter 6: Synchronization Tools

Background

The Critical-Section Problem

Peterson's Solution

Hardware Support for Synchronization

Mutex Locks

Semaphores

Monitors

Liveness

Evaluation

Objectives

Describe the critical-section problem and illustrate a race condition

Illustrate hardware solutions to the critical-section problem using memory barriers, compare-and-swap operations, and atomic variables

Demonstrate how mutex locks, semaphores, monitors, and condition variables can be used to solve the critical section problem

Evaluate tools that solve the critical-section problem in low-. Moderate-, and high-contention scenarios

Background

Processes can execute concurrently

- May be interrupted at any time, partially completing execution

Concurrent access to shared data may result in data inconsistency

Maintaining data consistency requires mechanisms to ensure the orderly execution of cooperating processes

Illustration of the problem:
Suppose that we wanted to provide a solution to the consumer-producer problem that fills ***all*** the buffers. We can do so by having an integer **`counter`** that keeps track of the number of full buffers. Initially, **`counter`** is set to 0. It is incremented by the producer after it produces a new buffer and is decremented by the consumer after it consumes a buffer.

Producer

```
while (true) {
      /* produce an item in next produced */

      while (counter == BUFFER_SIZE)
            ; /* do nothing */
      buffer[in] = next_produced;
      in = (in + 1) % BUFFER_SIZE;
      counter++;
}
```

Consumer

```
while (true) {
      while (counter == 0)
            ; /* do nothing */
      next_consumed = buffer[out];
      out = (out + 1) % BUFFER_SIZE;
        counter--;
      /* consume the item in next consumed */
}
```

Race Condition

`counter++` could be implemented as

```
register1 = counter
register1 = register1 + 1
counter = register1
```

`counter--` could be implemented as

```
register2 = counter
register2 = register2 - 1
counter = register2
```

Consider this execution interleaving with "count = 5" initially:

S0: producer execute `register1 = counter`	{register1 = 5}
S1: producer execute `register1 = register1 + 1`	{register1 = 6}
S2: consumer execute `register2 = counter`	{register2 = 5}
S3: consumer execute `register2 = register2 - 1`	{register2 = 4}
S4: producer execute `counter = register1`	{counter = 6 }
S5: consumer execute `counter = register2`	{counter = 4}

Race Condition

Processes P_0 and P_1 are creating child processs using the `fork()` system call

Race condition on kernel variable `next_available_pid` which represents the next available process identifier (pid)

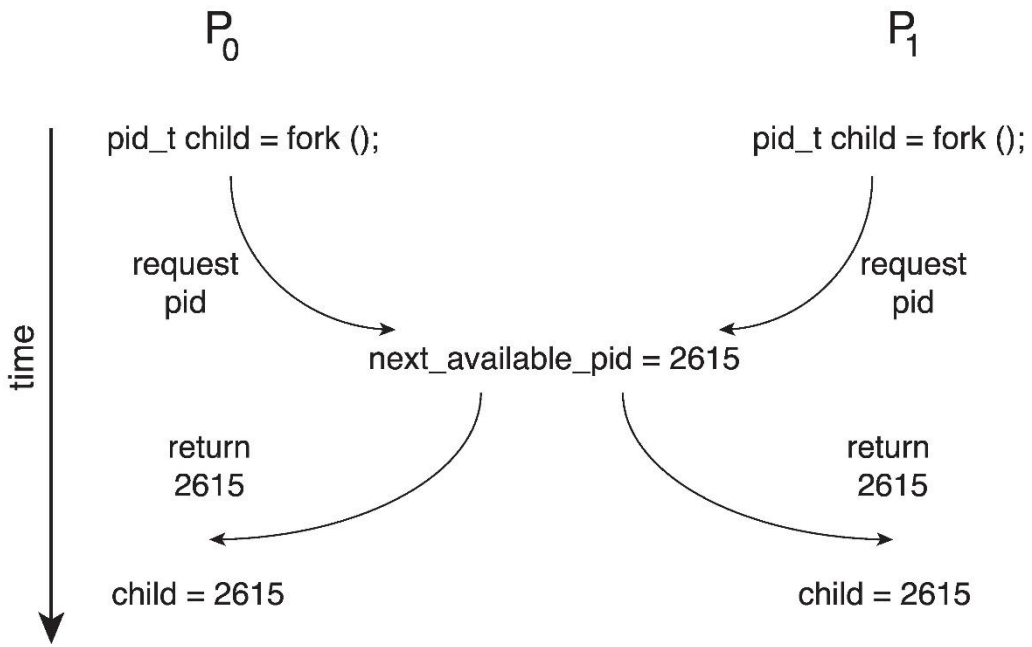

Unless there is mutual exclusion, the same pid could be assigned to two different processes!

Critical Section Problem

Consider system of ***n*** processes {$p_0, p_1, \ldots p_{n-1}$}

Each process has **critical section** segment of code

- Process may be changing common variables, updating table, writing file, etc
- When one process in critical section, no other may be in its critical section

Critical section problem is to design protocol to solve this

Each process must ask permission to enter critical section in **entry section**, may follow critical section with **exit section**, then **remainder section**

Critical Section

General structure of process P_i

```
do {
        entry section
            critical section
        exit section
            remainder section
} while (true);
```

Solution to Critical-Section Problem

1. **Mutual Exclusion** - If process P_i is executing in its critical section, then no other processes can be executing in their critical sections
2. **Progress** - If no process is executing in its critical section and there exist some processes that wish to enter their critical section, then the selection of the processes that will enter the critical section next cannot be postponed indefinitely
3. **Bounded Waiting** - A bound must exist on the number of times that other processes are allowed to enter their critical sections after a process has made a request to enter its critical section and before that request is granted
   - Assume that each process executes at a nonzero speed
   - No assumption concerning **relative speed** of the ***n*** processes

Critical-Section Handling in OS

Two approaches depending on if kernel is preemptive or non- preemptive

- **Preemptive** – allows preemption of process when running in kernel mode
- **Non-preemptive** – runs until exits kernel mode, blocks, or voluntarily yields CPU
  - Essentially free of race conditions in kernel mode

Peterson's Solution

Not guaranteed to work on modern architectures! (But good algorithmic description of solving the problem)

Two process solution

Assume that the **`load`** and **`store`** machine-language instructions are atomic; that is, cannot be interrupted

The two processes share two variables:

```
int turn;
boolean flag[2]
```

The variable **`turn`** indicates whose turn it is to enter the critical section

The **`flag`** array is used to indicate if a process is ready to enter the critical section. **`flag[i] = true`** implies that process P_i is ready!

Algorithm for Process P_i

```
while (true){
      flag[i] = true;
      turn = j;
      while (flag[j] && turn = = j);

      /* critical section */

      flag[i] = false;

      /* remainder section */

}
```

Peterson's Solution (Cont.)

Provable that the three CS requirement are met:

1. Mutual exclusion is preserved

   P_i enters CS only if:

   either **`flag[j] = false`** or **`turn = i`**

2. Progress requirement is satisfied
3. Bounded-waiting requirement is met

Peterson's Solution

Although useful for demonstrating an algorithm, Peterson's Solution is not guaranteed to work on modern architectures.

Understanding why it will not work is also useful for better understanding race conditions.

To improve performance, processors and/or compilers may reorder operations that have no dependencies.

For single-threaded this is ok as the result will always be the same.

For multithreaded the reordering may produce inconsistent or unexpected results!

Peterson's Solution

Two threads share the data:

```
boolean flag = false;
int x = 0;
```

Thread 1 performs

```
while (!flag)
    ;
print x
```

Thread 2 performs

```
x = 100;
flag = true
```

What is the expected output?

Peterson's Solution

100 is the expected output.

However, the operations for Thread 2 may be reordered:

```
flag = true;
x = 100;
```

If this occurs, the output may be 0!

The effects of instruction reordering in Peterson's Solution

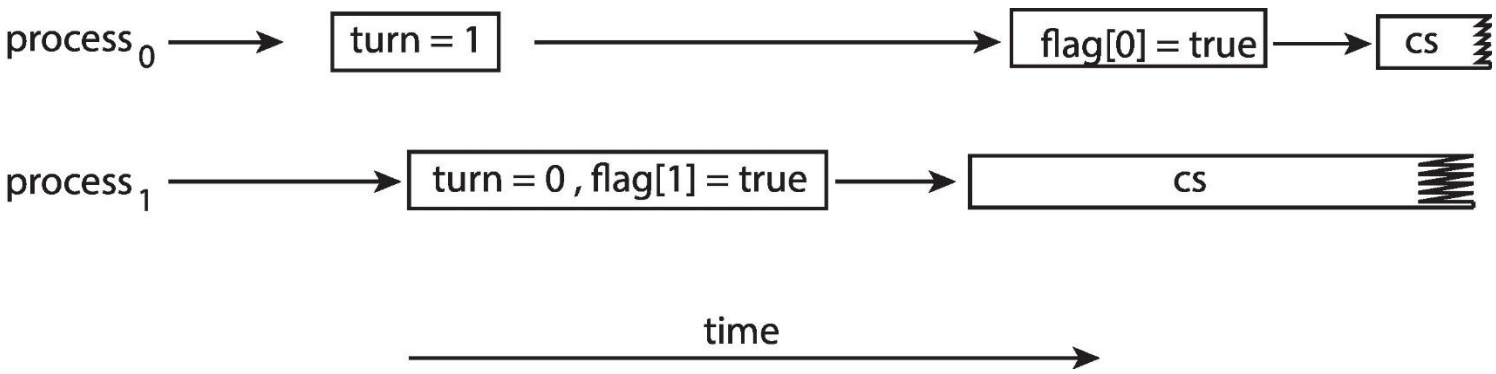

This allows both processes to be in their critical section at the same time!

Cache Coherence Problem

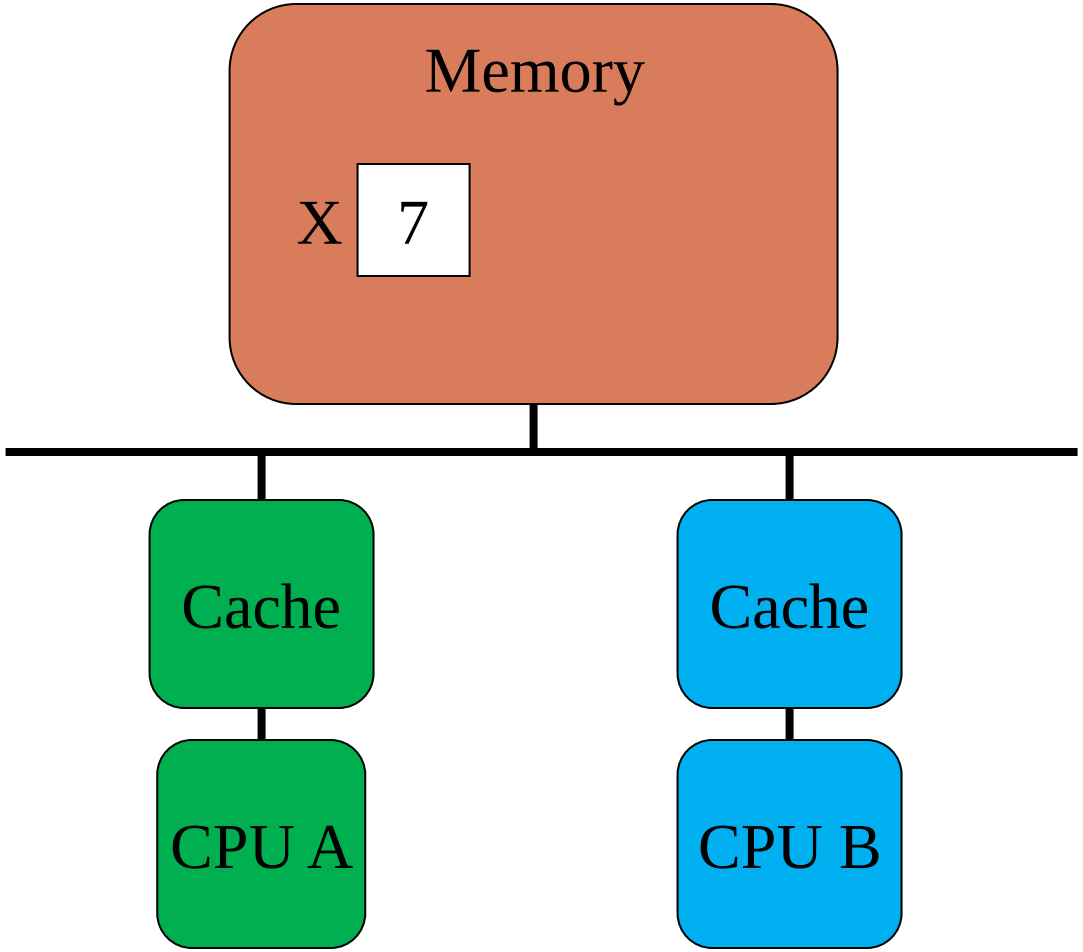

Cache Coherence Problem

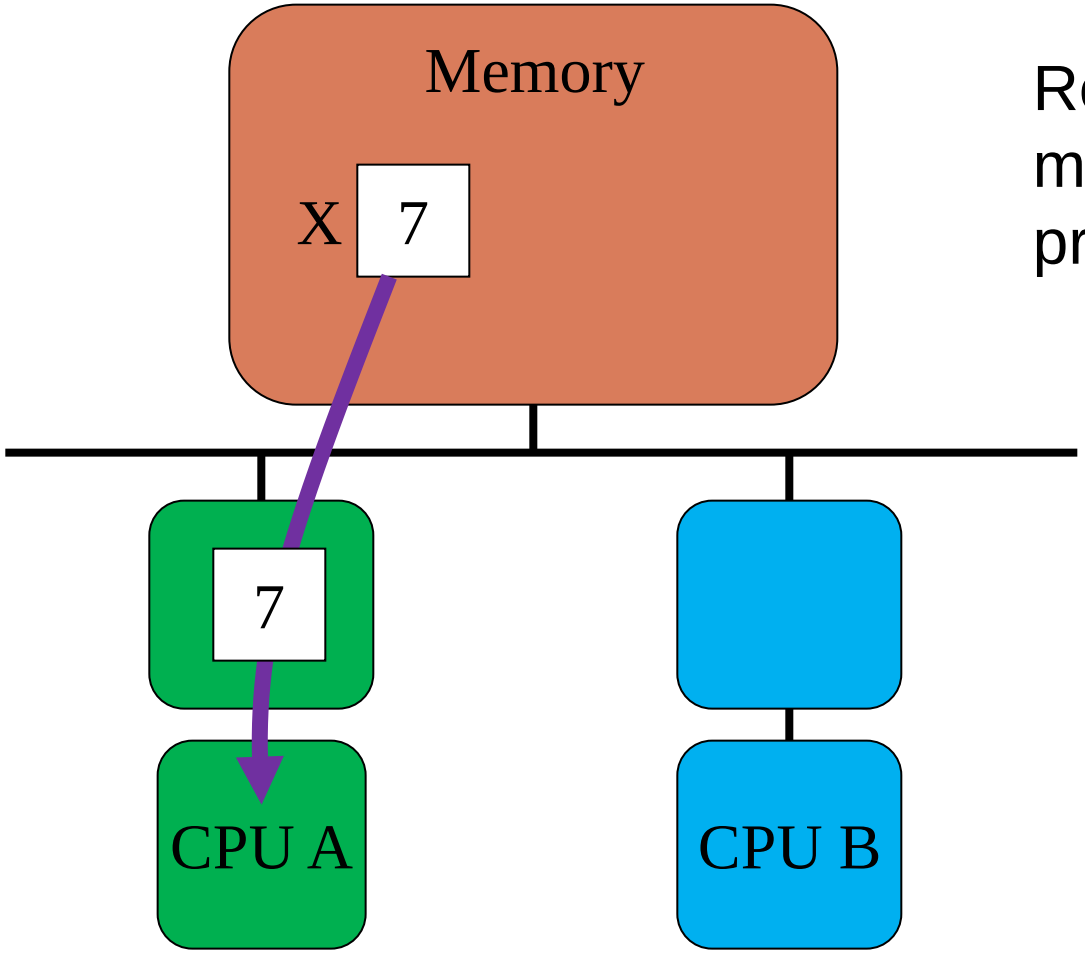

Read from memory is not a problem.

Cache Coherence Problem

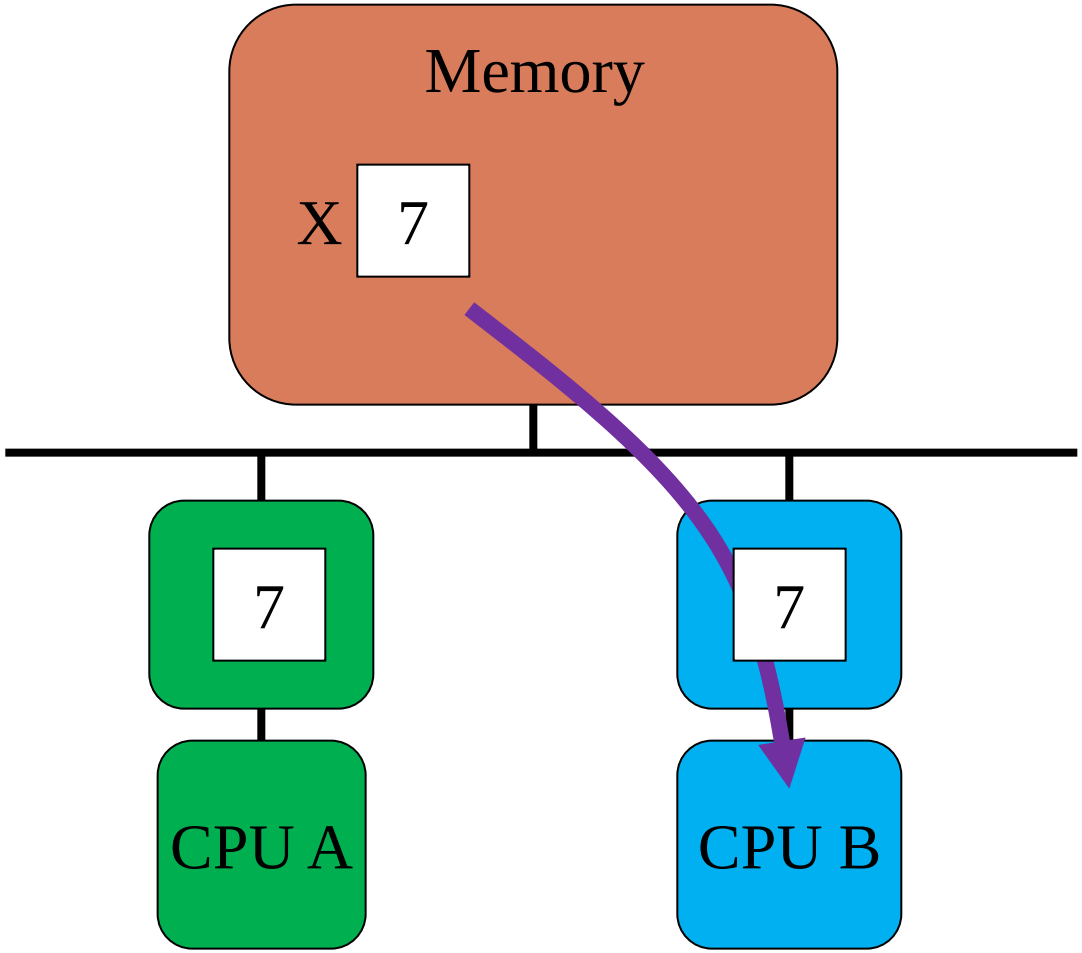

Cache Coherence Problem

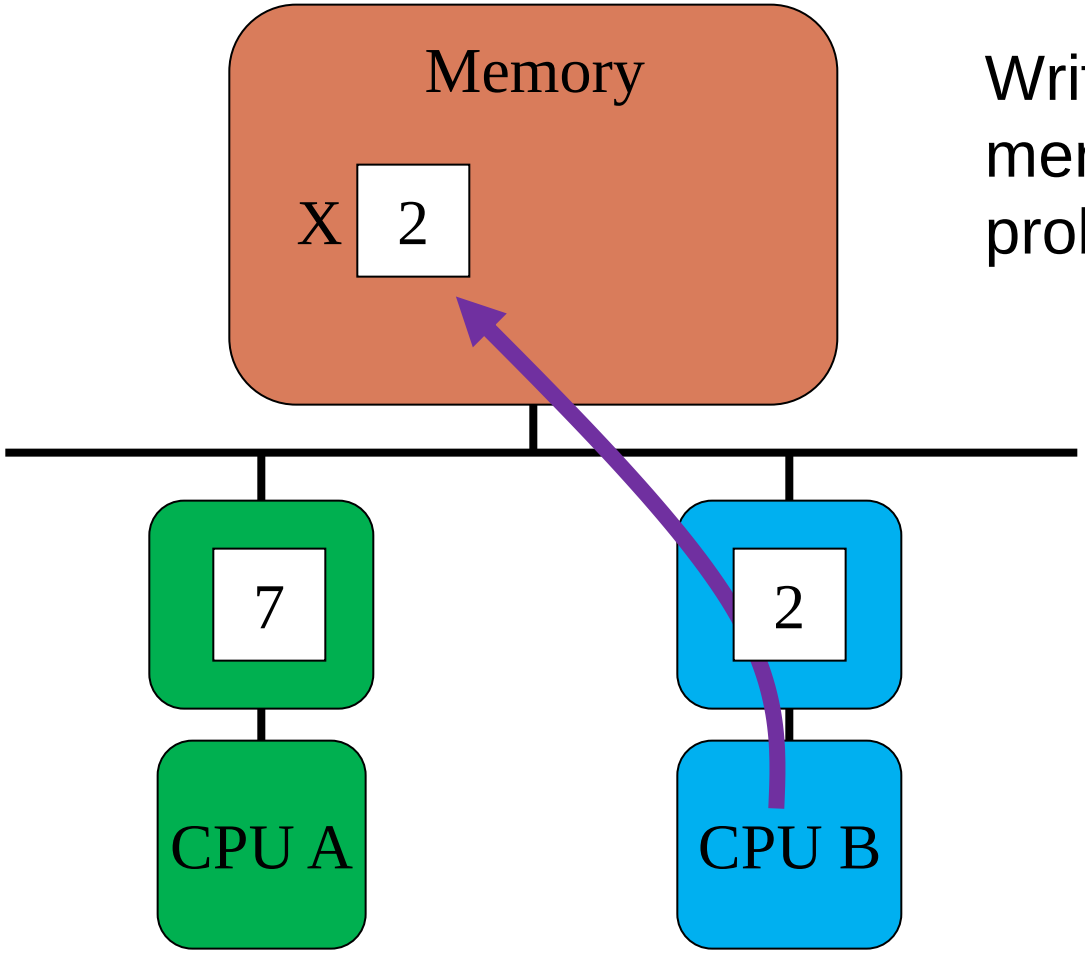

Write to main memory is a problem.

Write Invalidate Protocol

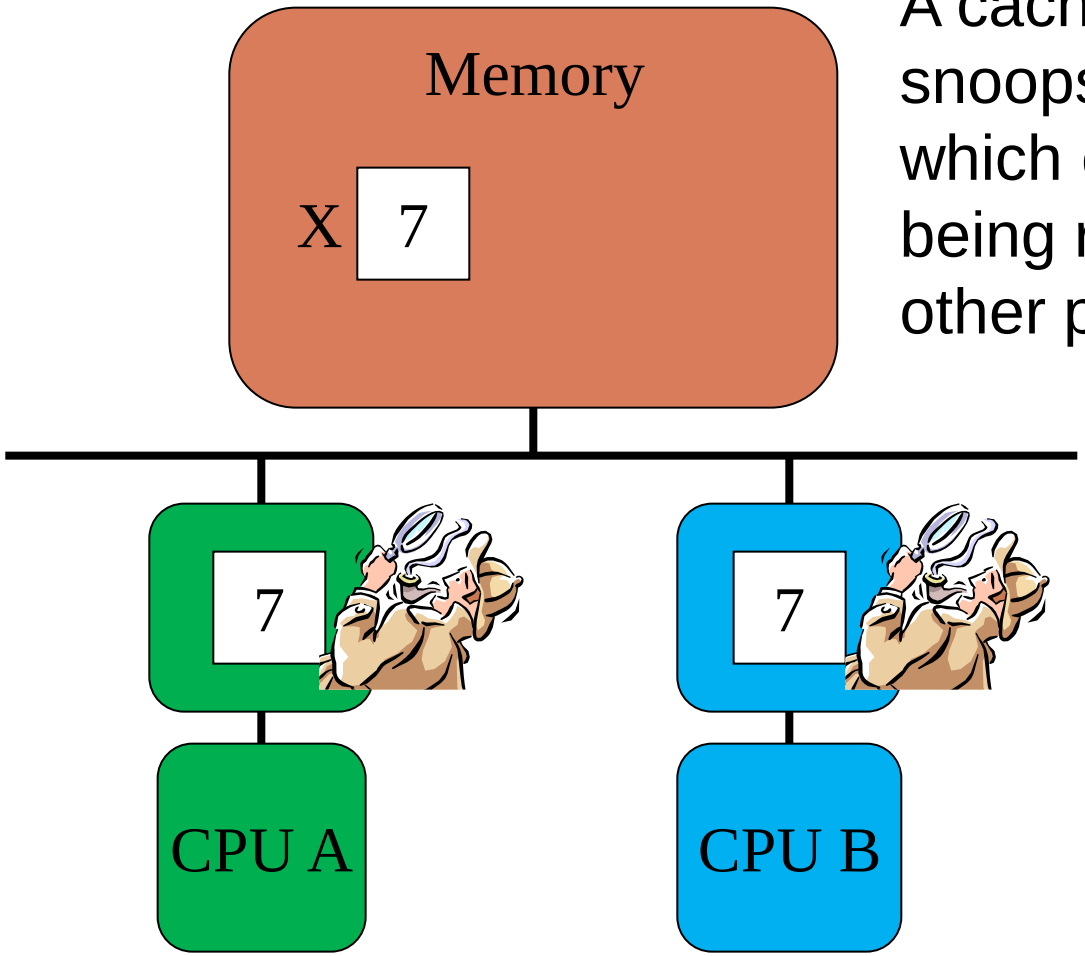

A cache control monitor snoops the bus to see which cache block is being requested by other processors.

Write Invalidate Protocol

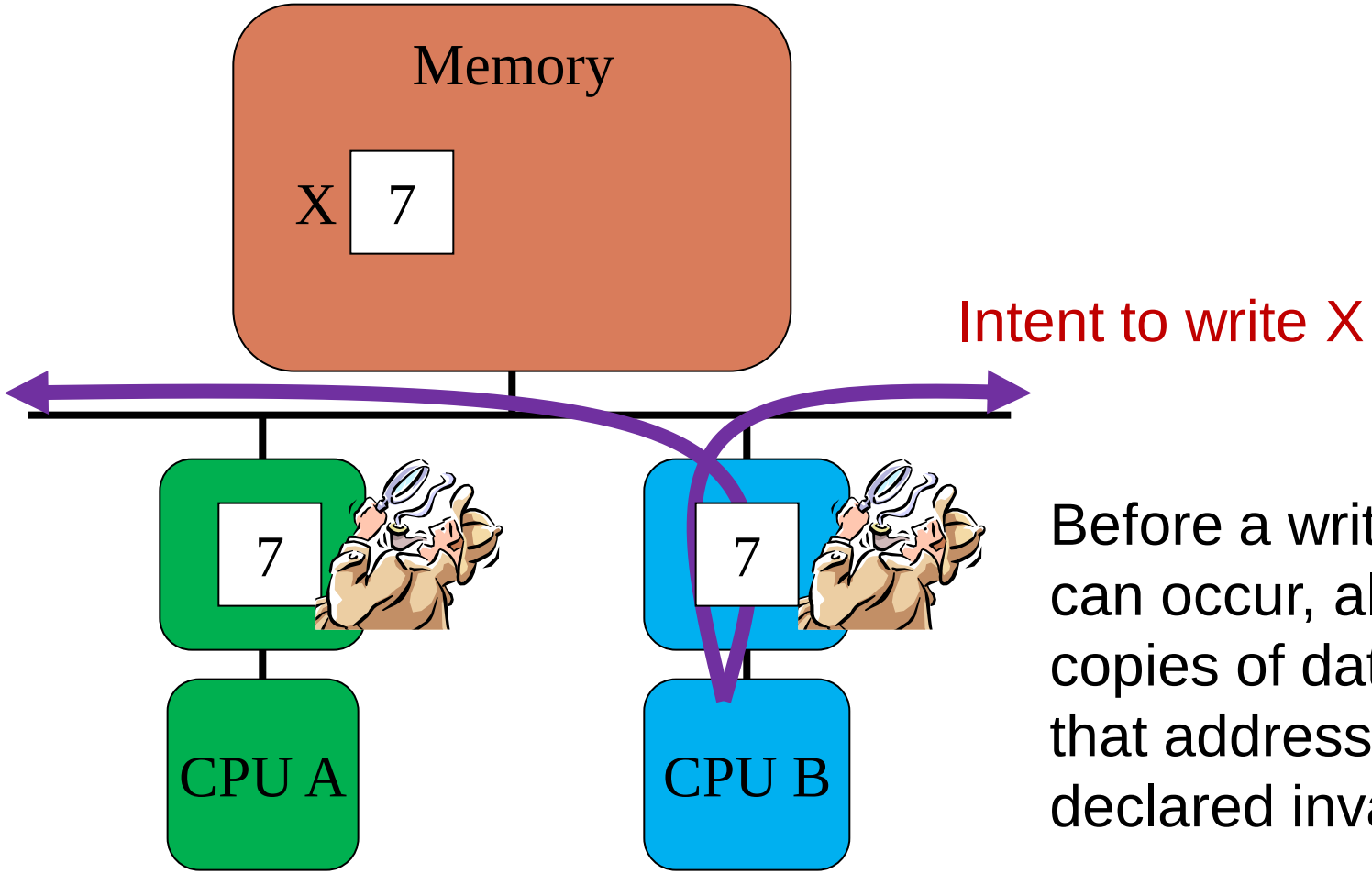

Before a write can occur, all copies of data at that address are declared invalid.

Write Invalidate Protocol

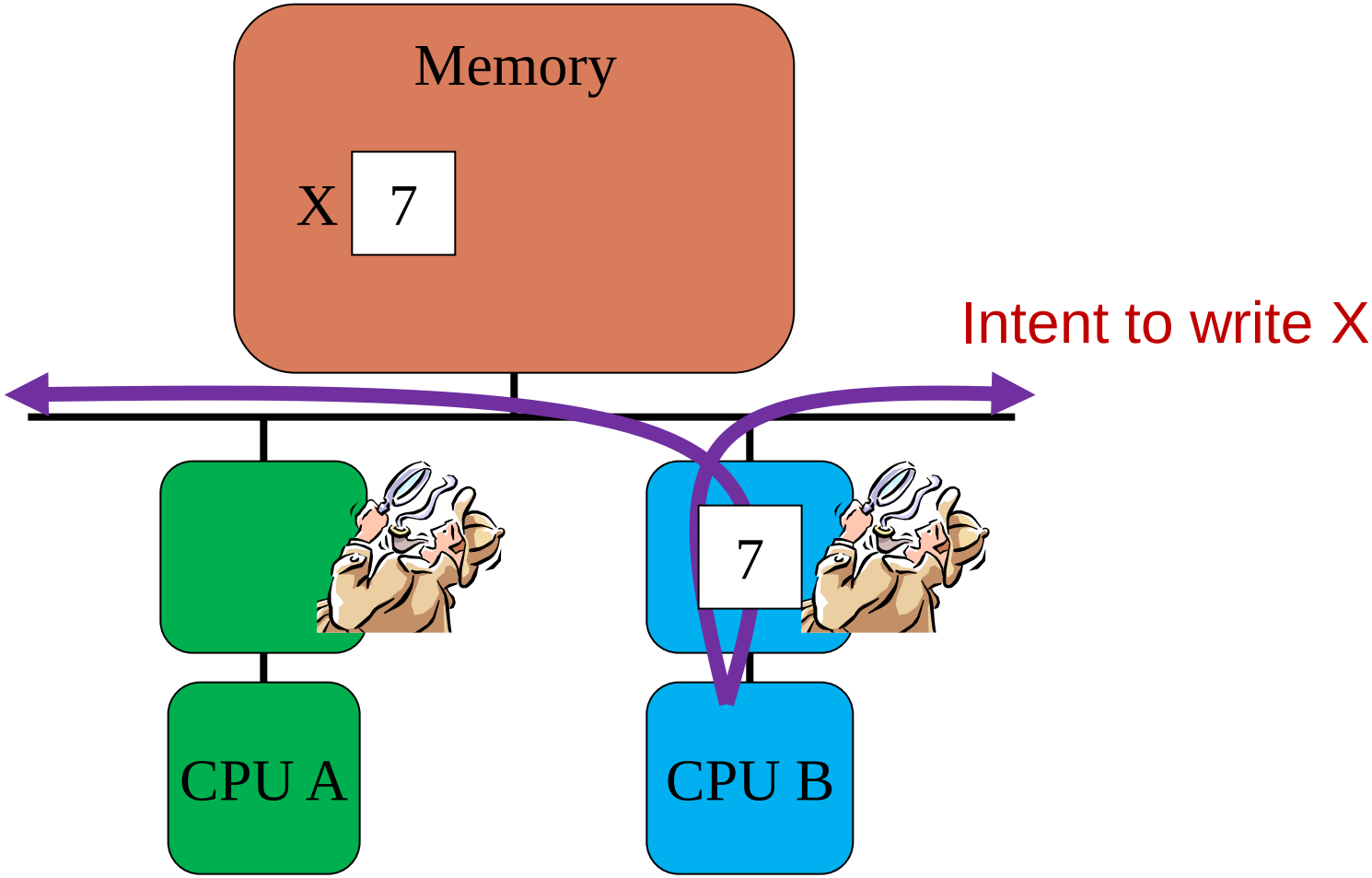

Write Invalidate Protocol

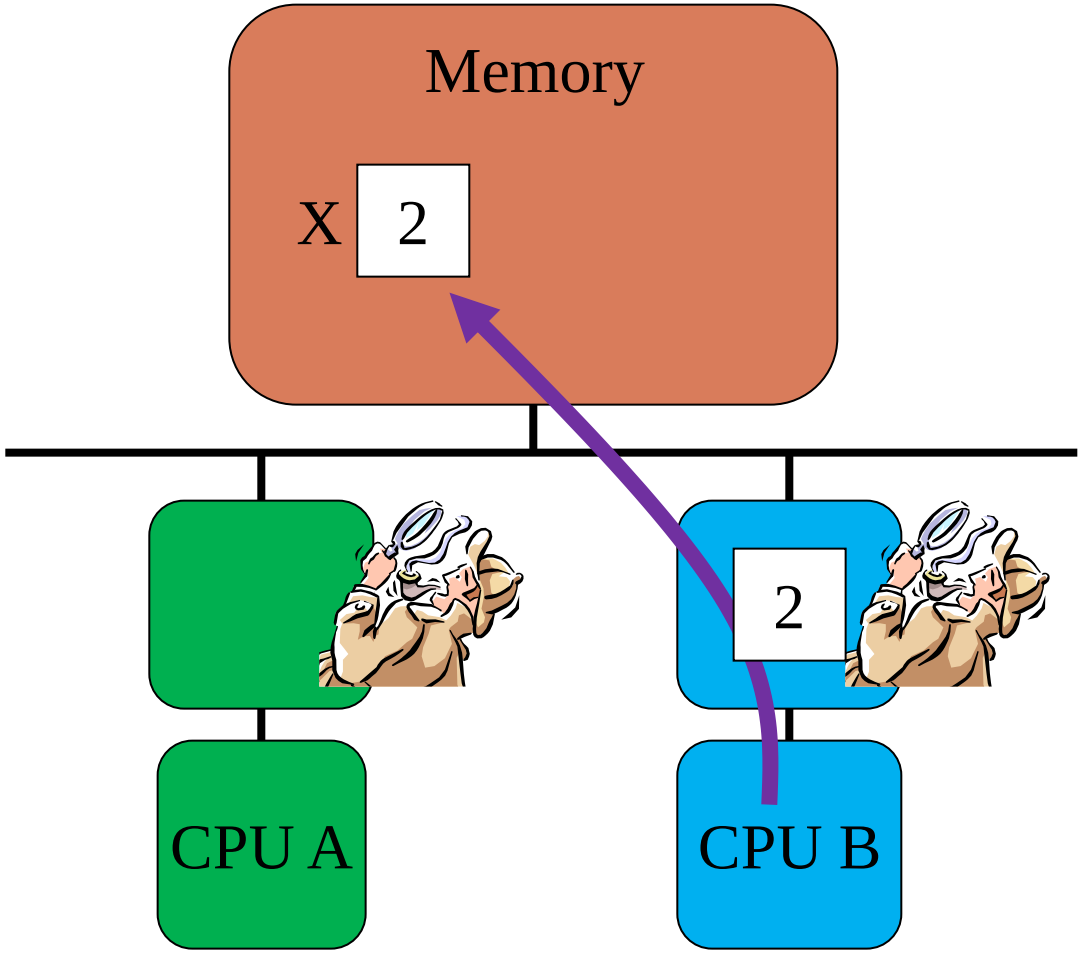

When another processor tries to read from this location in cache, it receives a cache miss error and will have to refresh from main memory.

Cache Coherence Problem in NUMA Processors

- Some NUMA multiprocessors do not support it in hardware
  - Only instructions and private data are stored in cache
  - Policy creates a large memory access time variance
- Implementation more difficult
  - No shared memory bus to “snoop”
  - **Directory-based protocol** needed

Directory-based Protocol

Distributed directory contains information about cacheable memory blocks

One directory entry for each cache block

Each entry has

- Sharing status
- Which processors have copies

Sharing Status

Uncached -- (denoted by "**U**")

- Block not in any processor's cache

Shared – (denoted by "**S**")

- Cached by one or more processors
- Read only

Exclusive – (denoted by "**E**")

- Cached by exactly one processor
- Processor has written to block
- Copy in memory is obsolete

Directory-based Protocol – Step 1

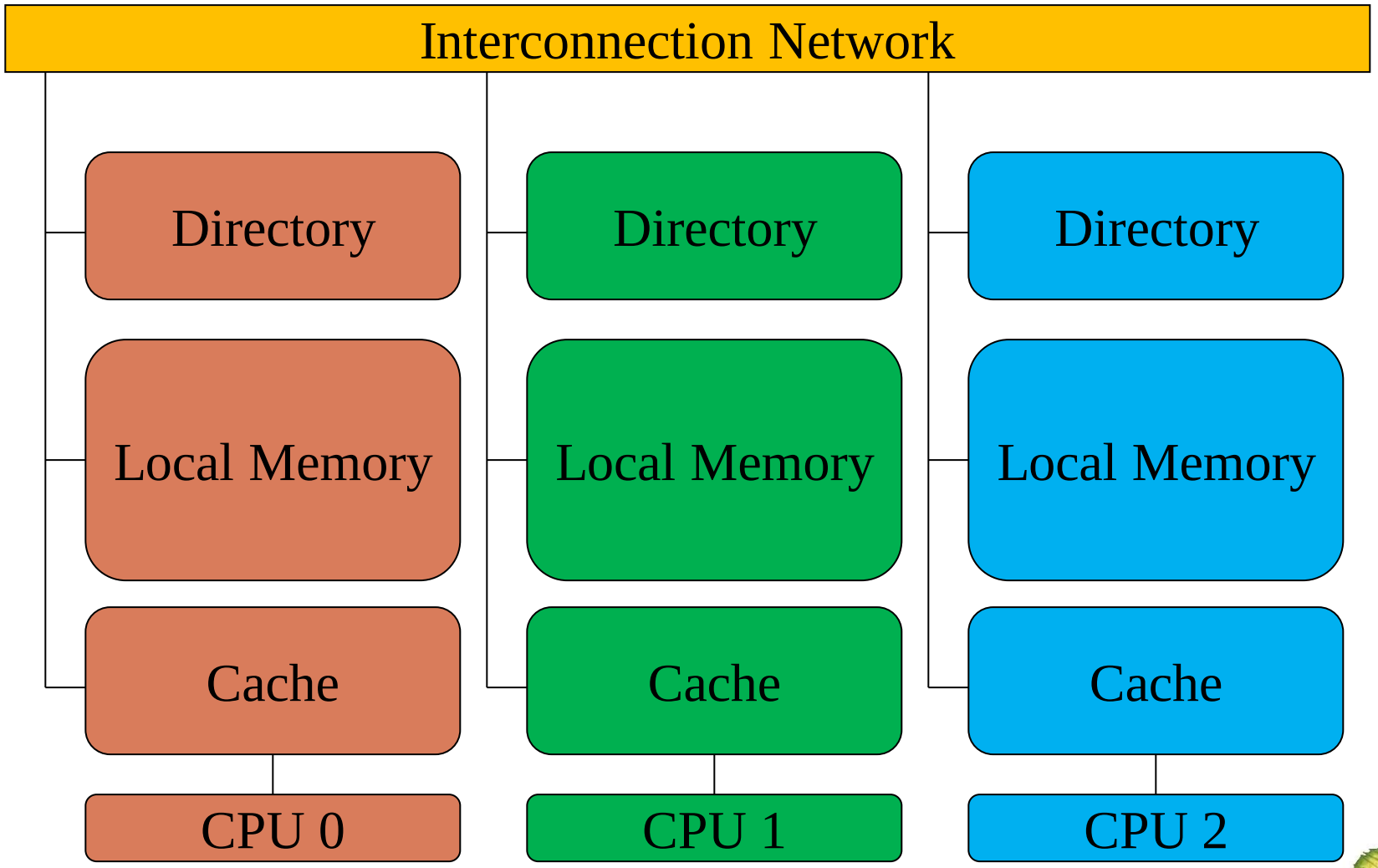

X has value 7 – Step 2

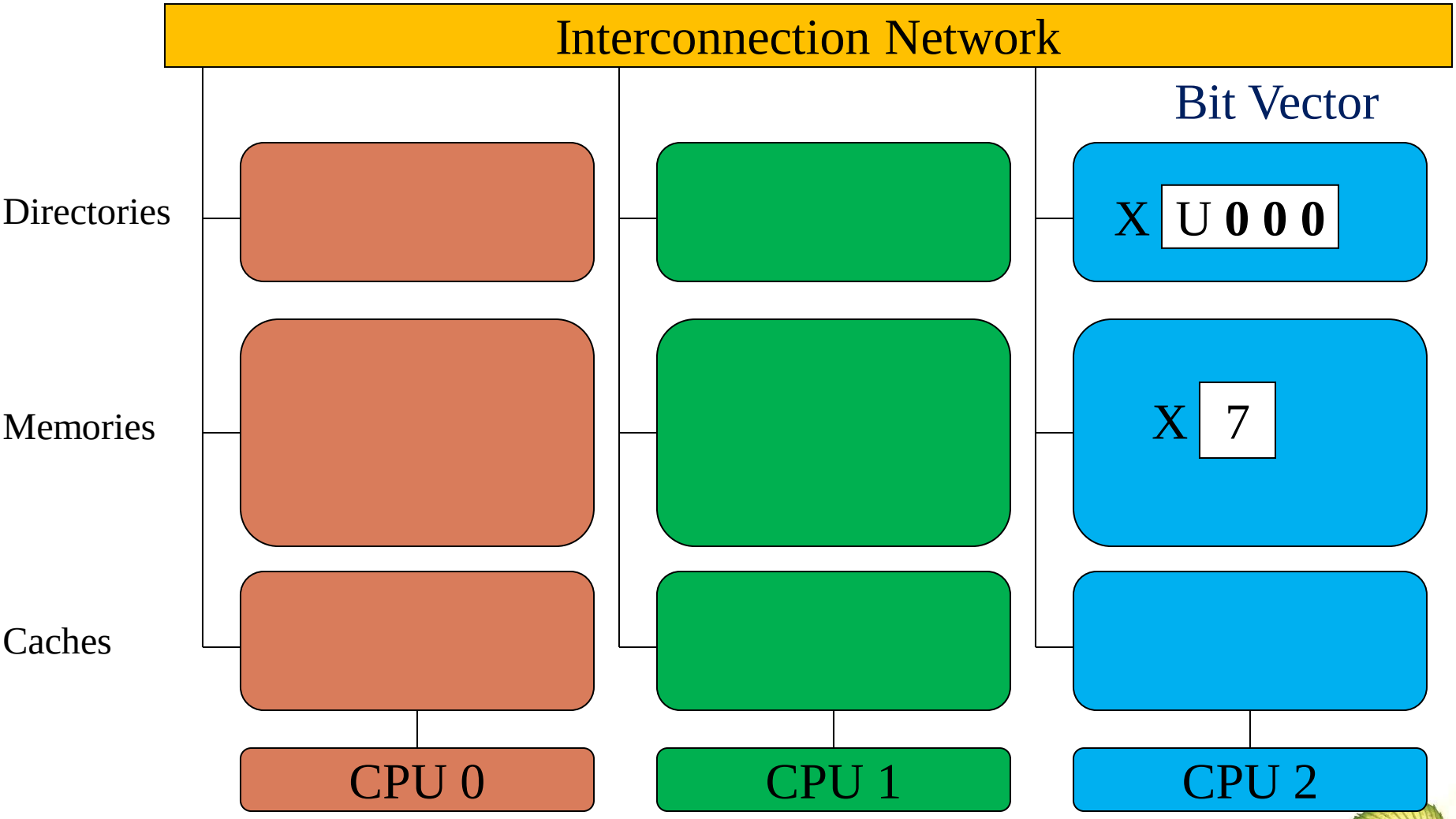

CPU 0 Reads X – Step 3

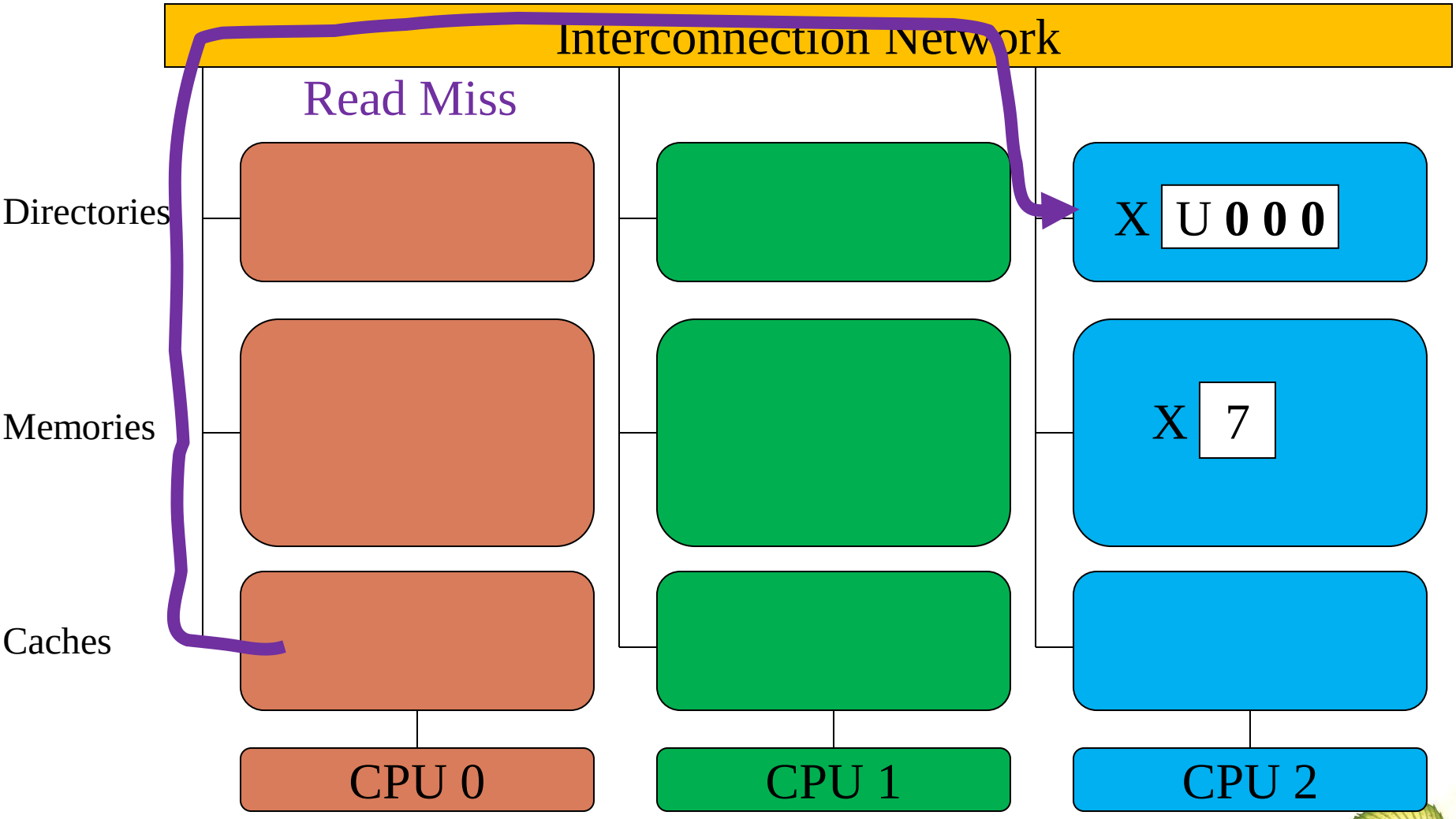

CPU 0 Reads X – Step 4

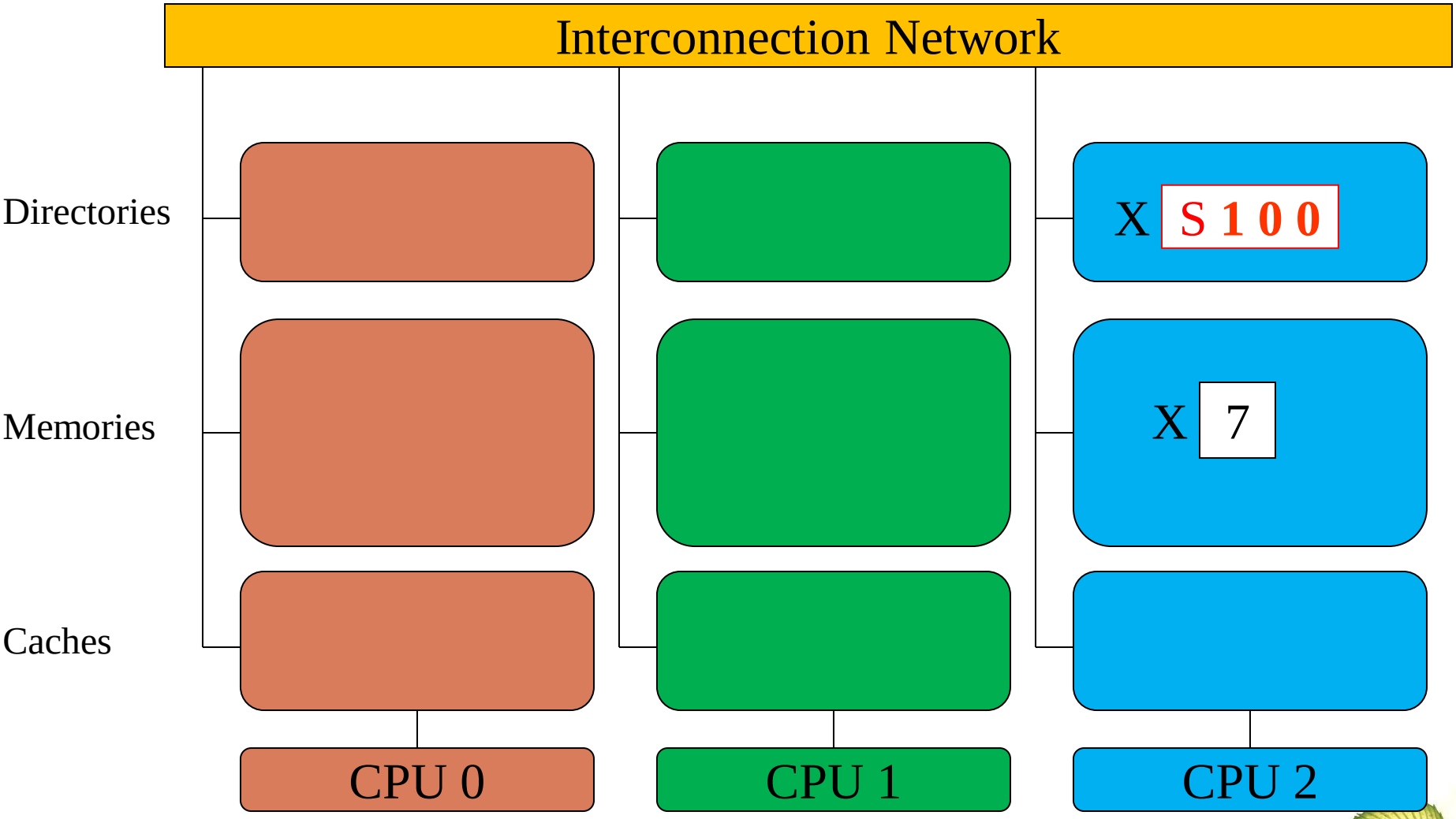

CPU 0 Reads X – Step 5

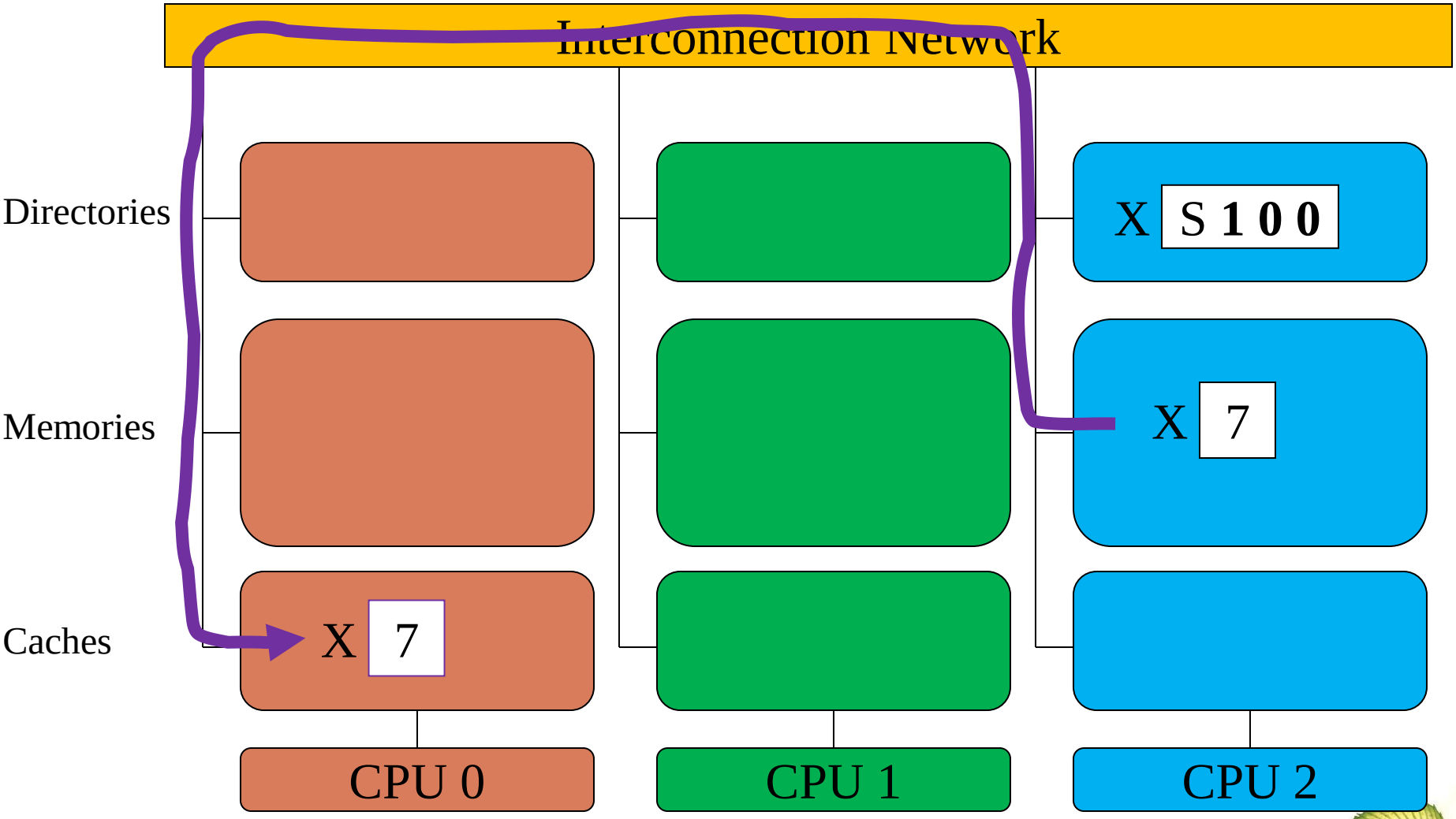

CPU 2 Reads X – Step 6

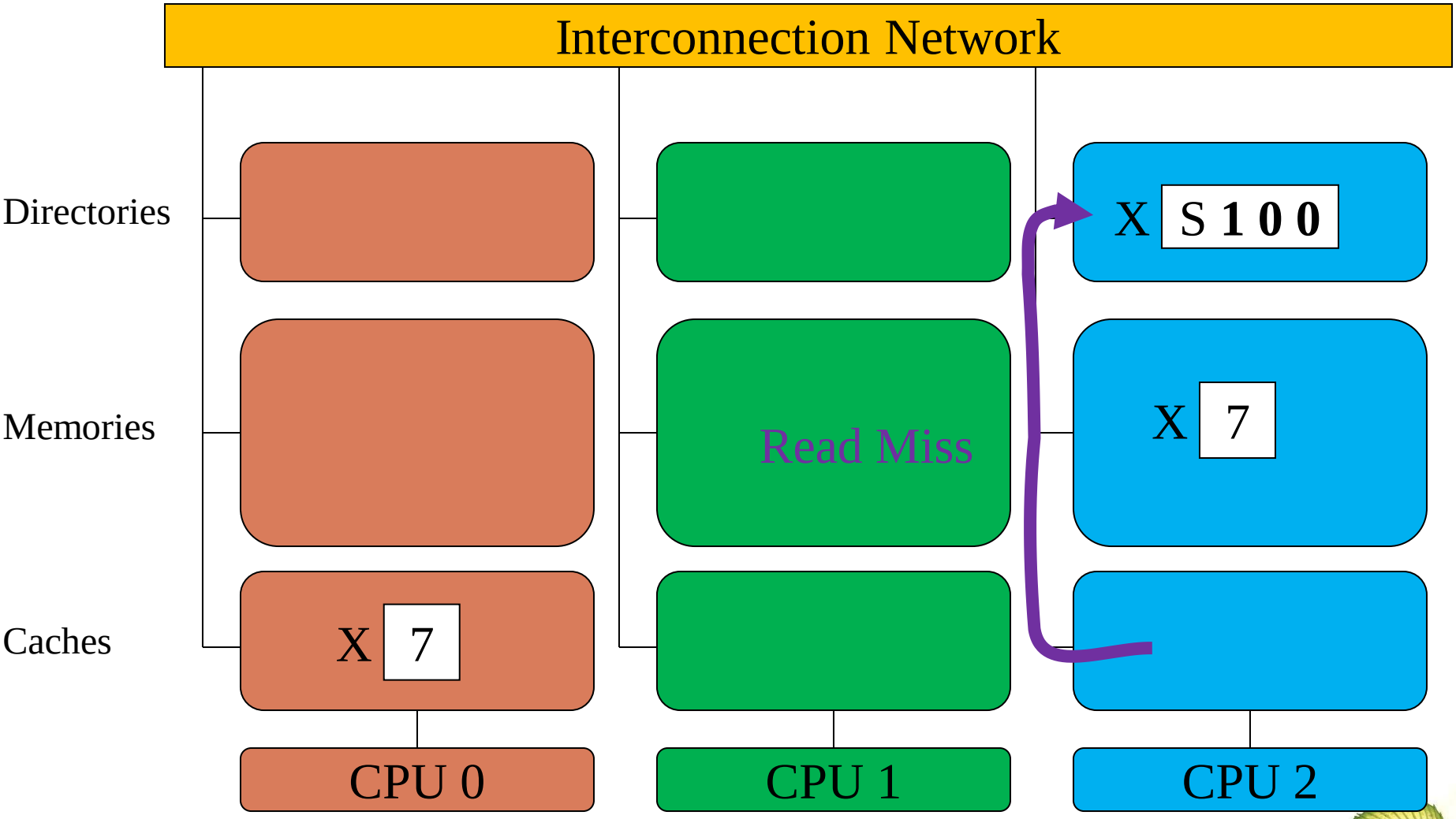

CPU 2 Reads X – Step 7

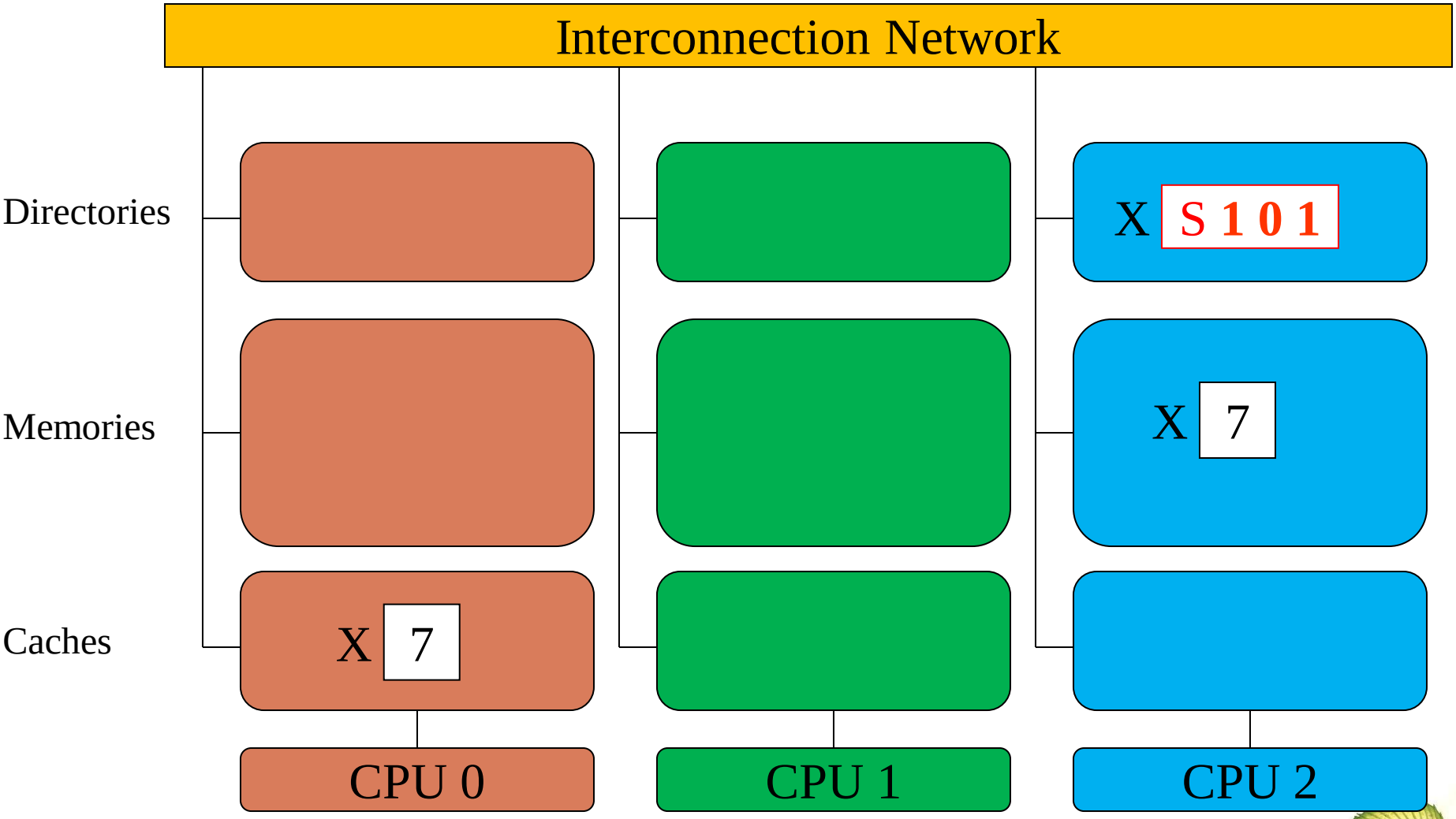

CPU 2 Reads X – Step 8

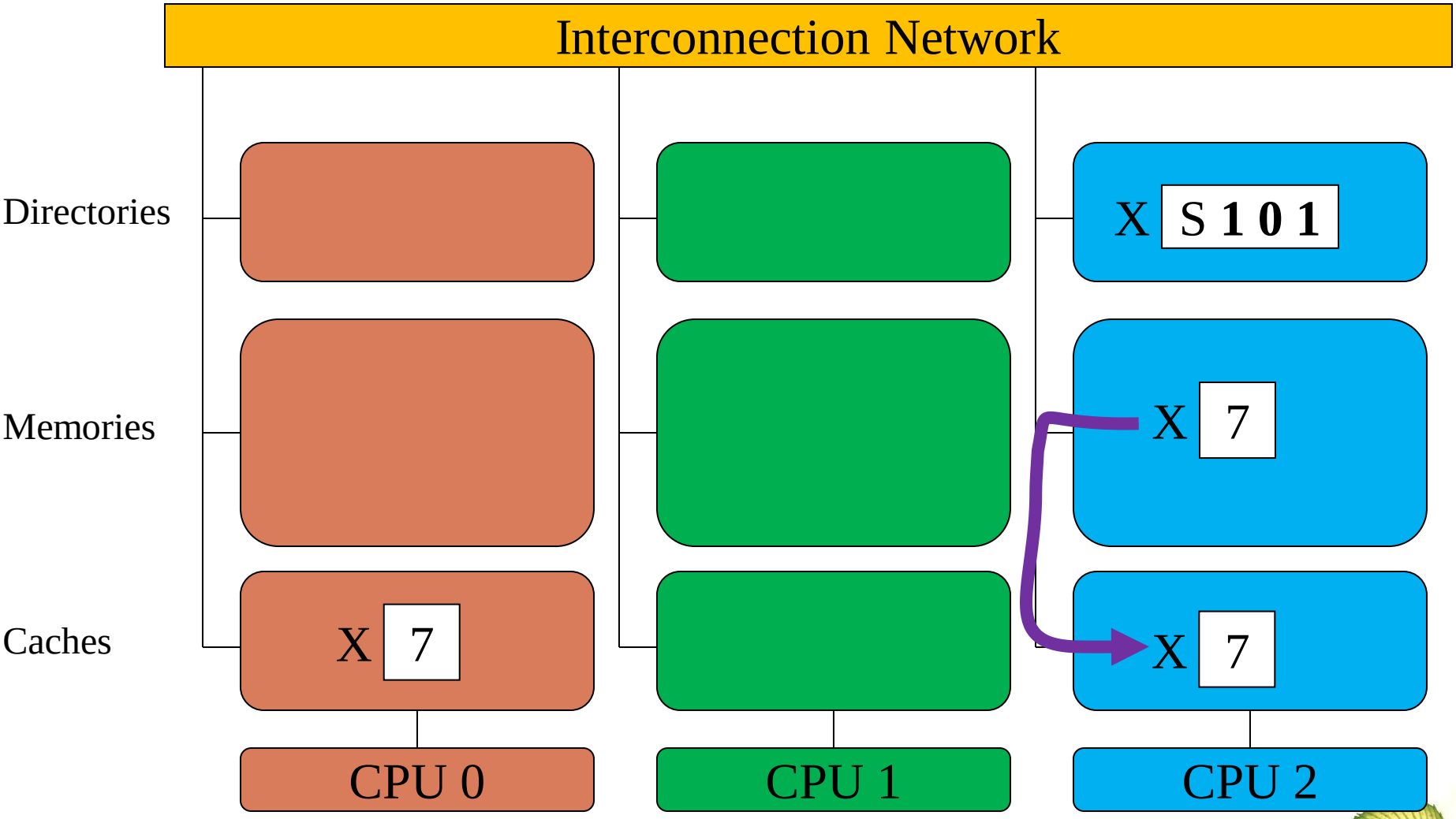

CPU 0 Writes 6 to X – Step 9

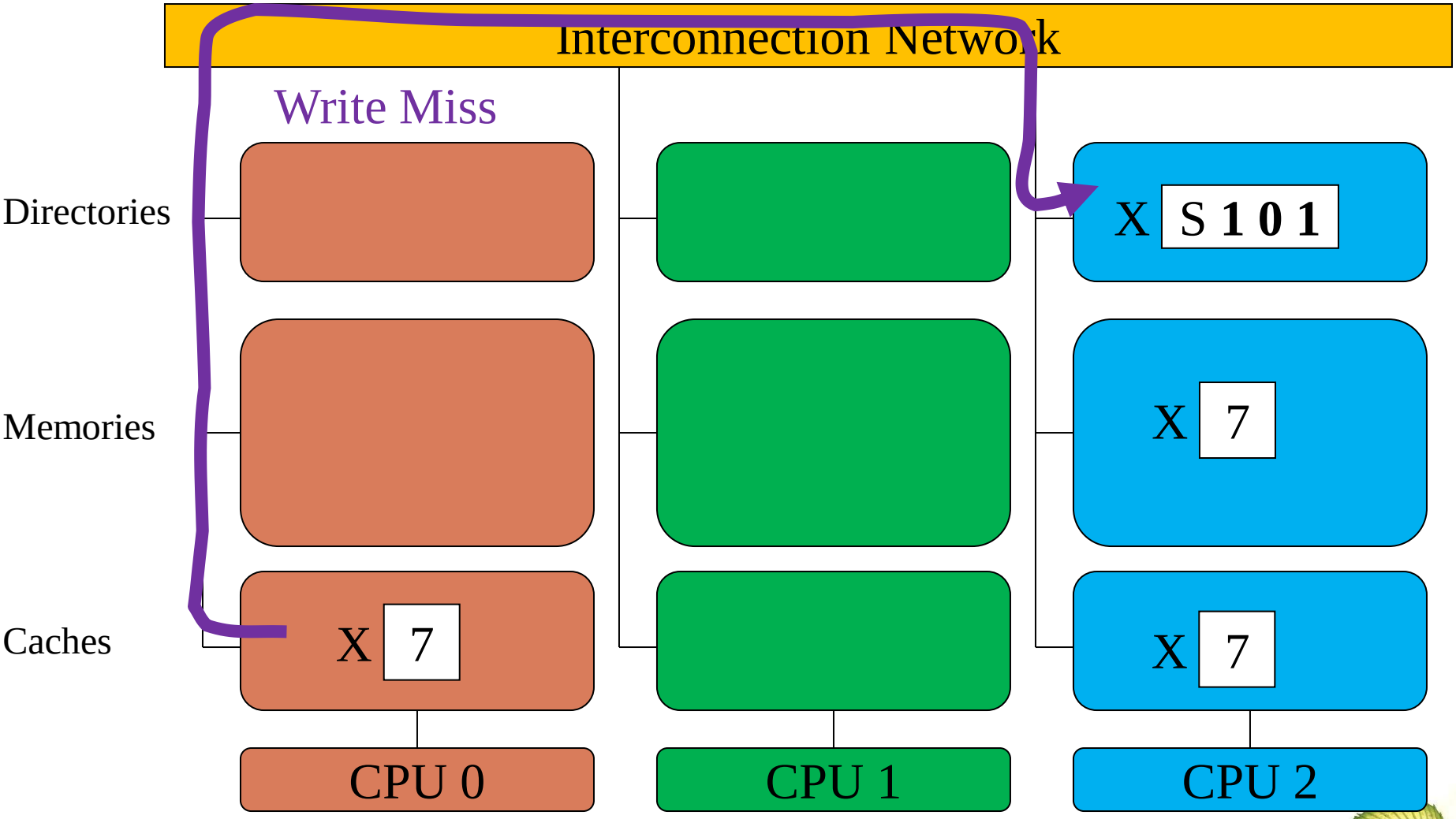

CPU 0 Writes 6 to X – Step 10

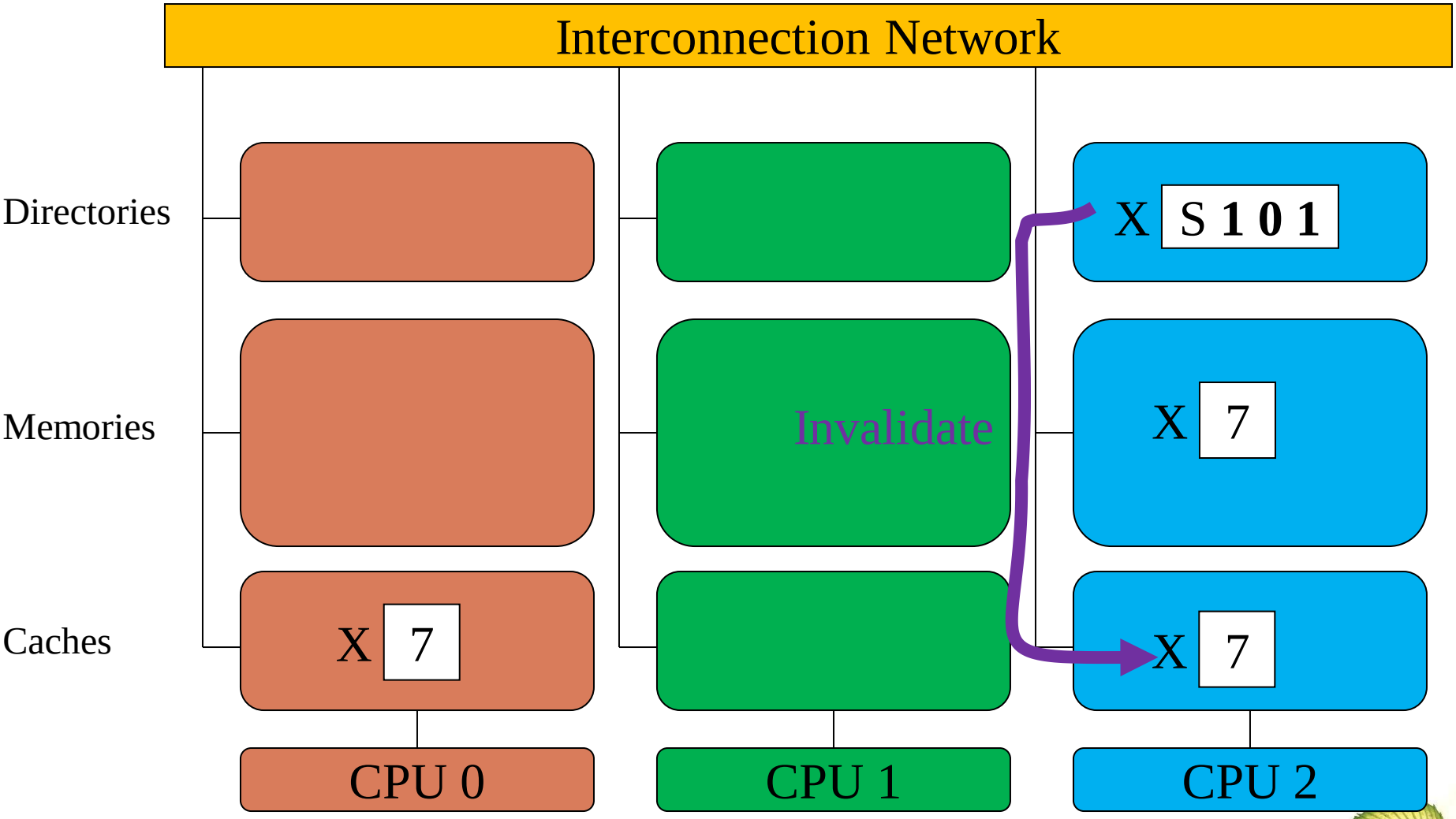

CPU 0 Writes 6 to X – Step 11

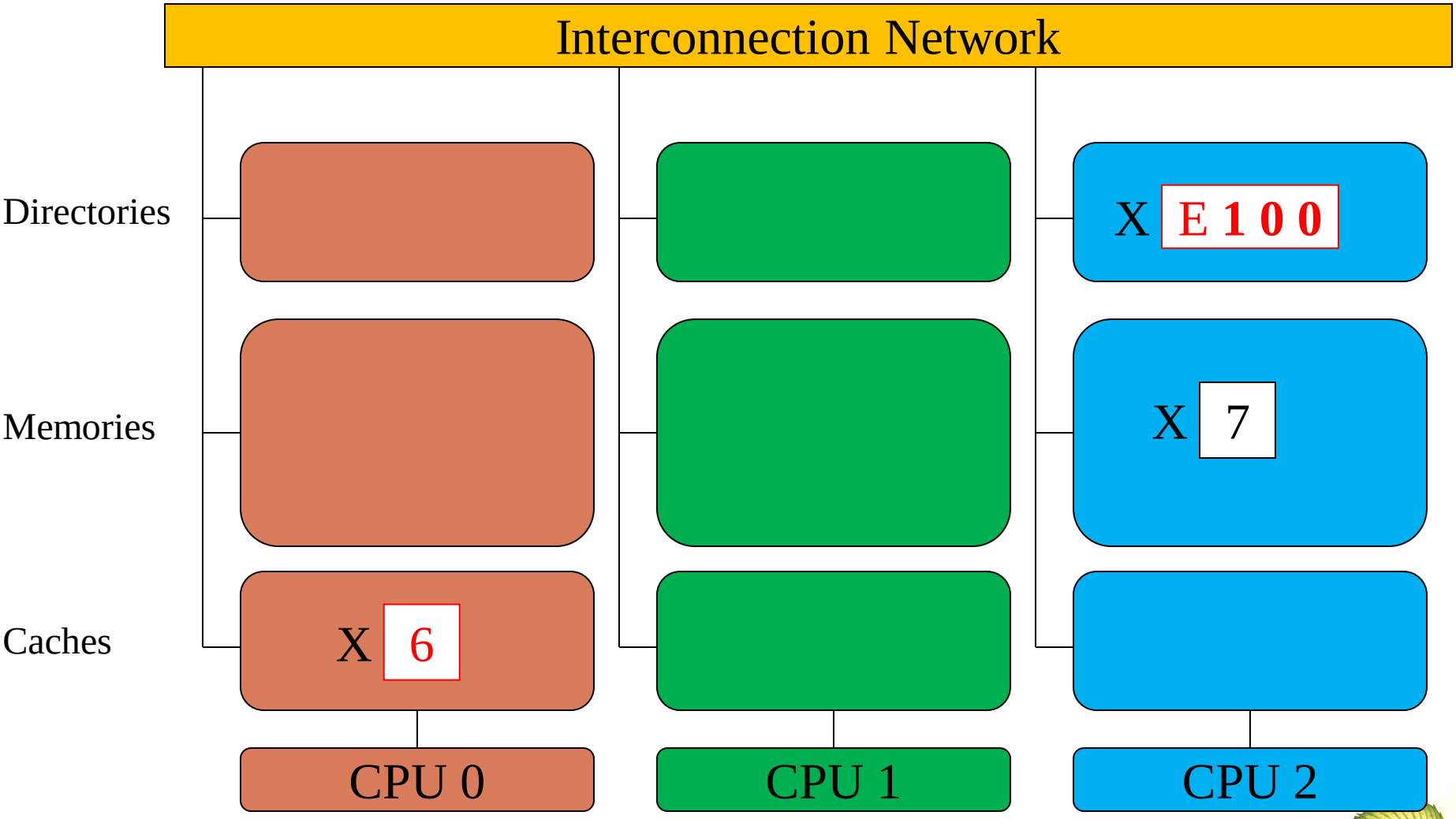

CPU 1 Reads X – Step 12

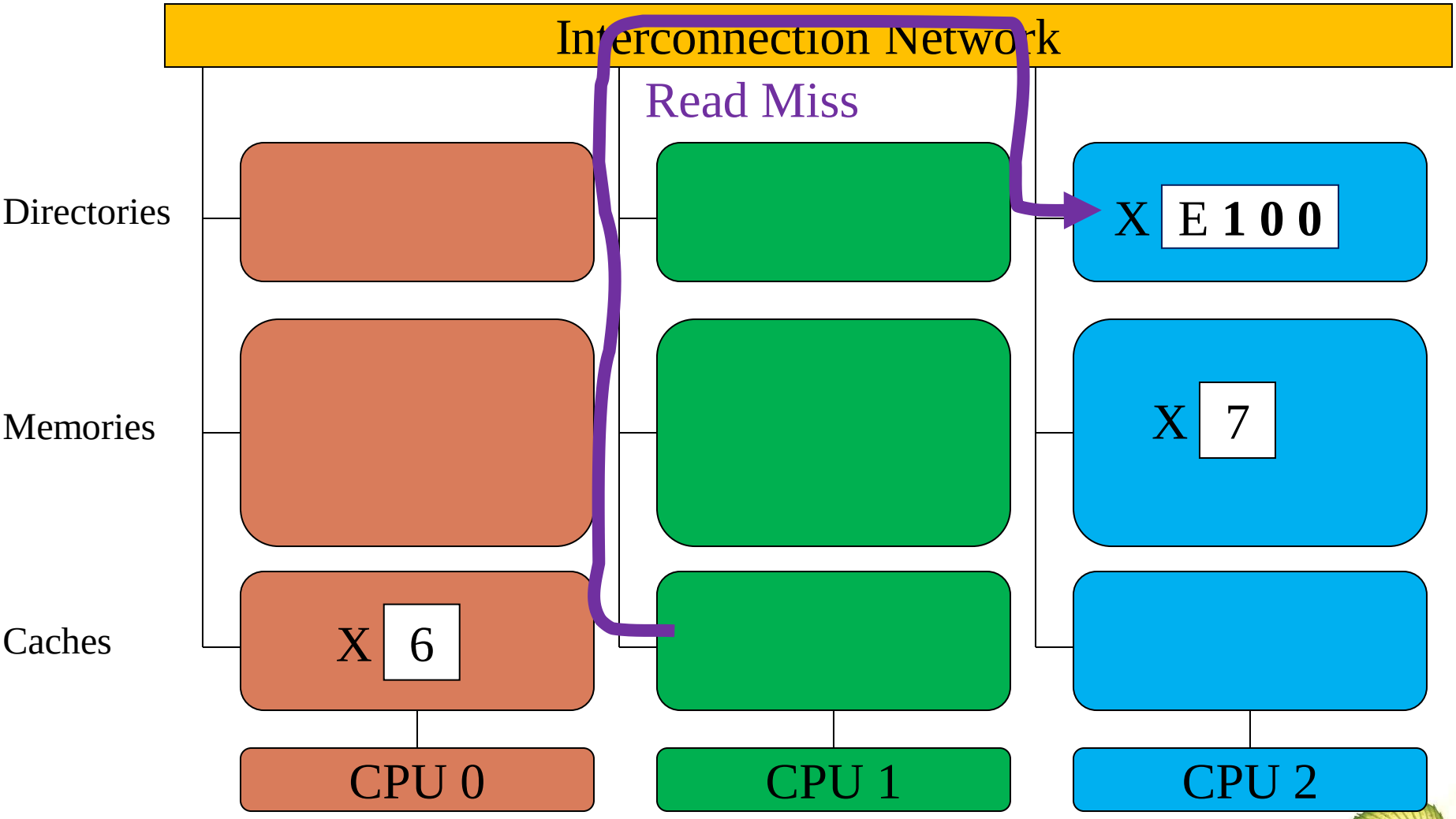

CPU 1 Reads X – Step 13

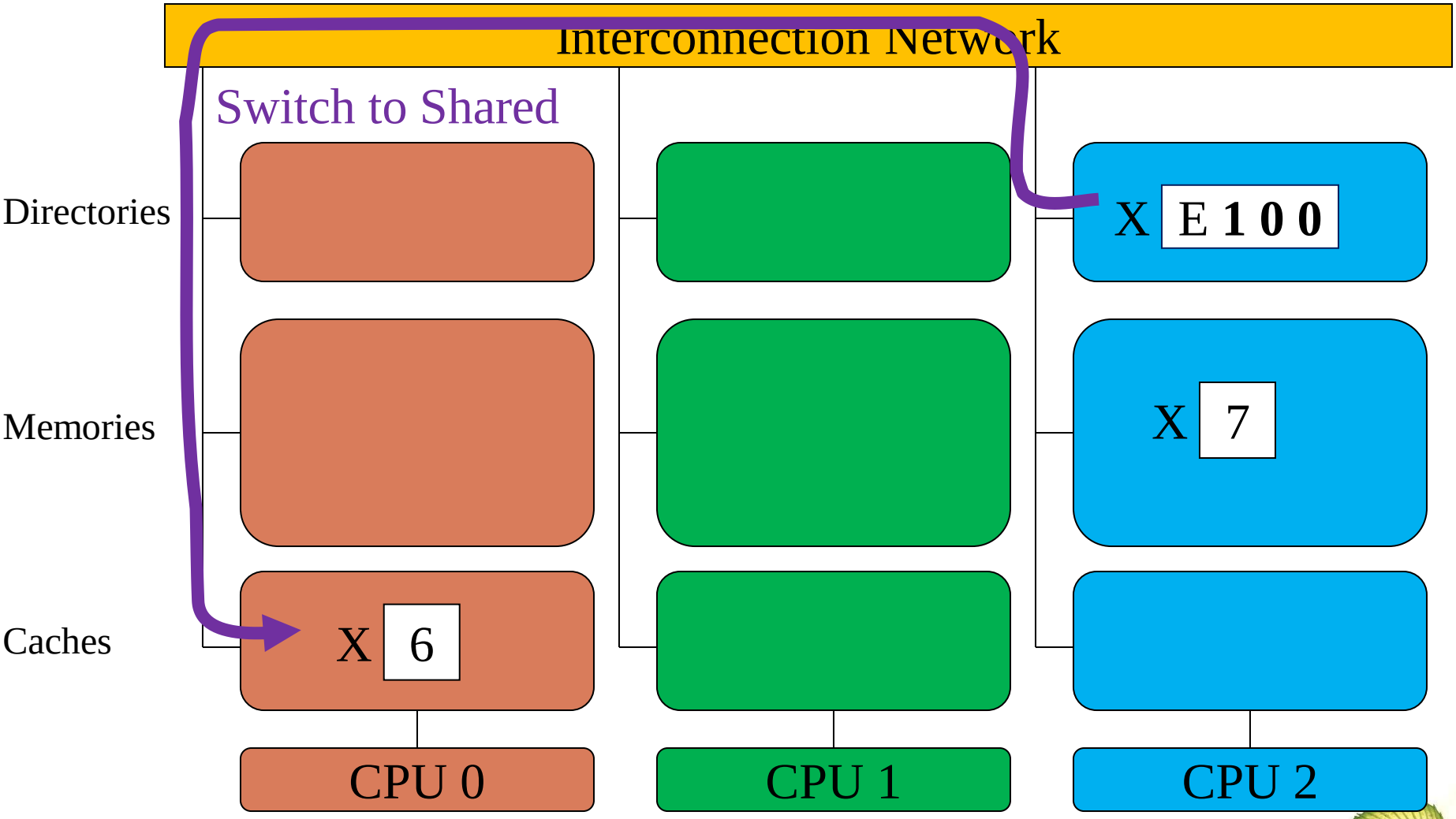

CPU 1 Reads X – Step 14

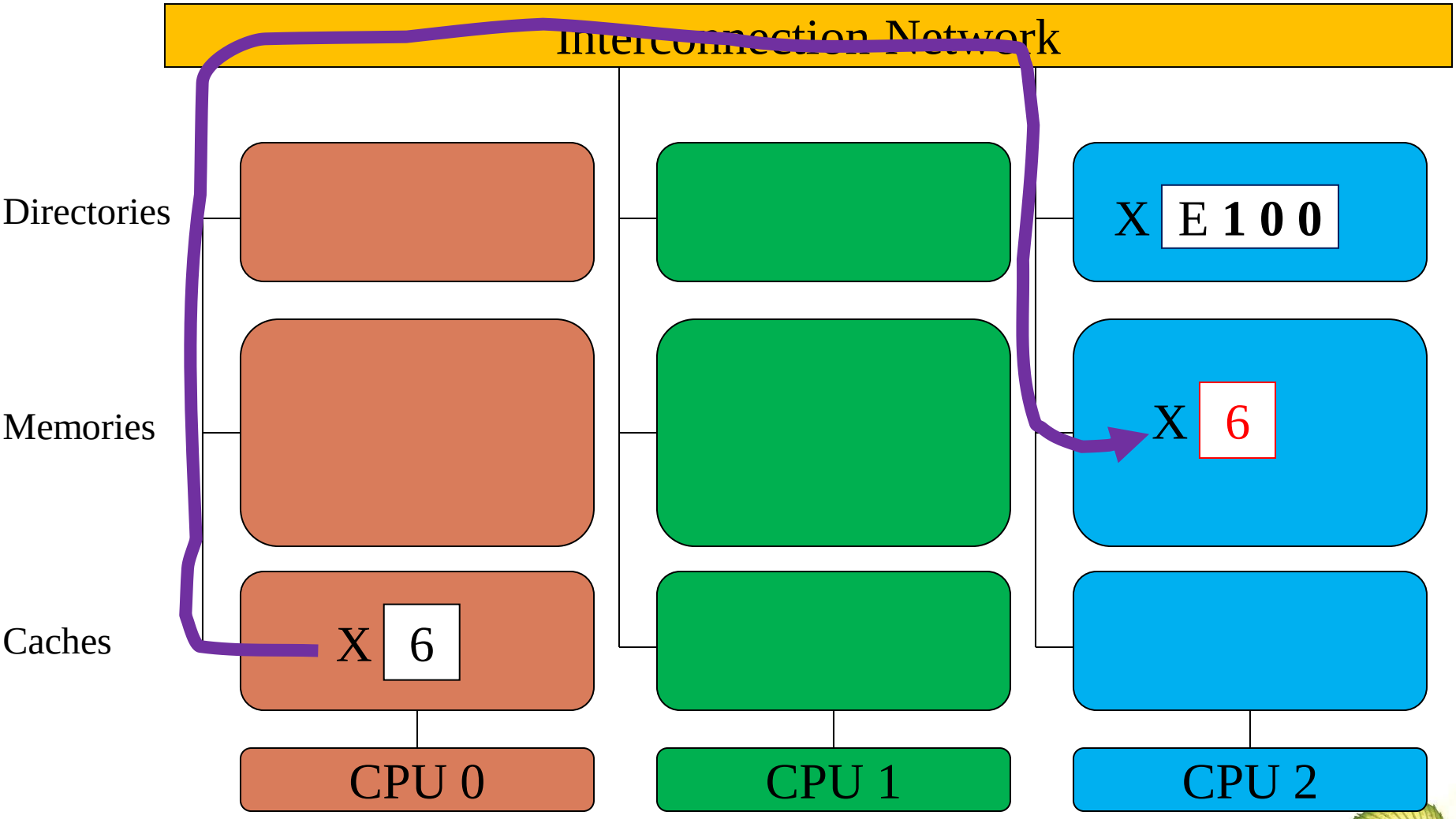

CPU 1 Reads X – Step 15

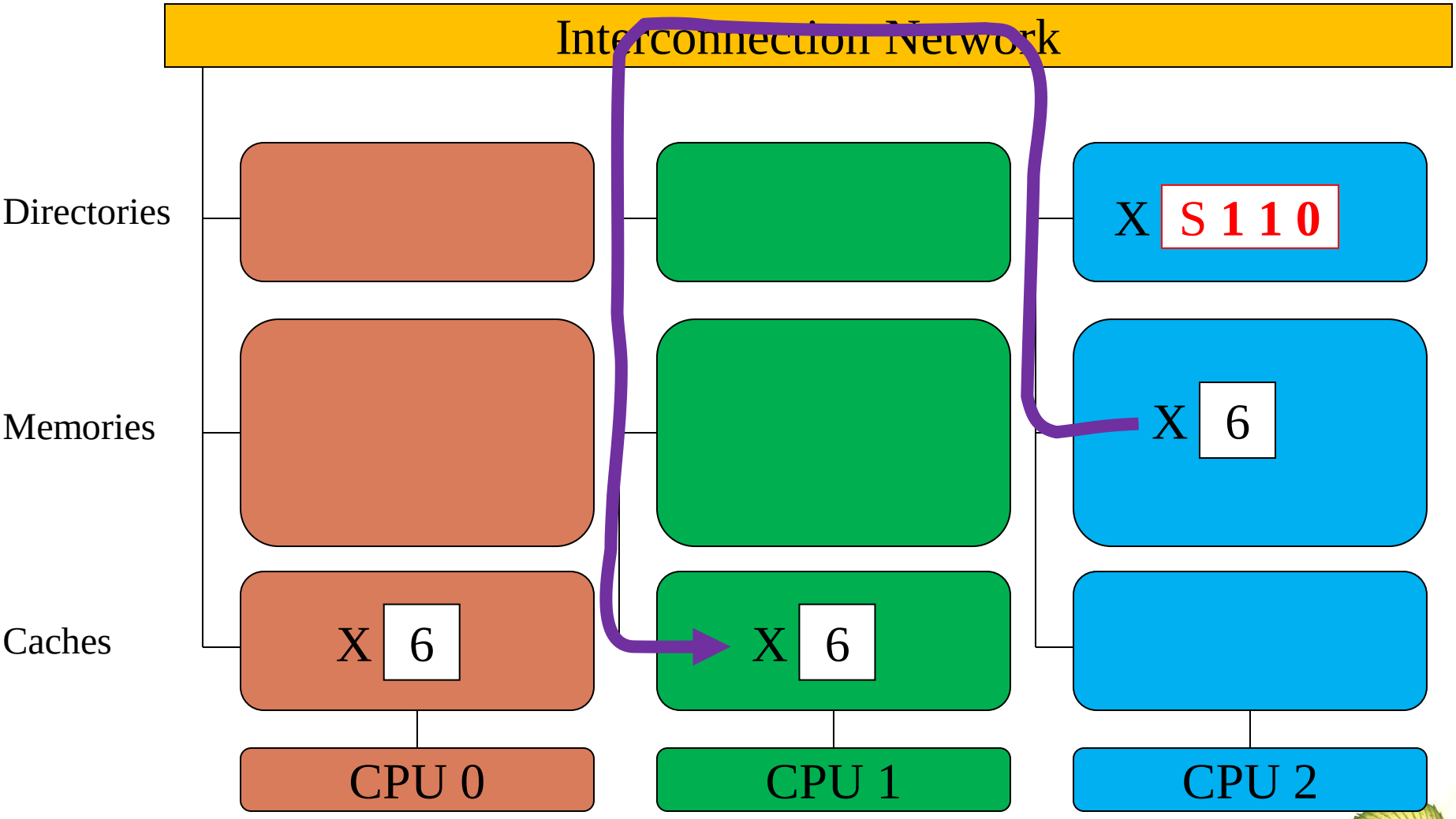

CPU 2 Writes 5 to X – Step 16

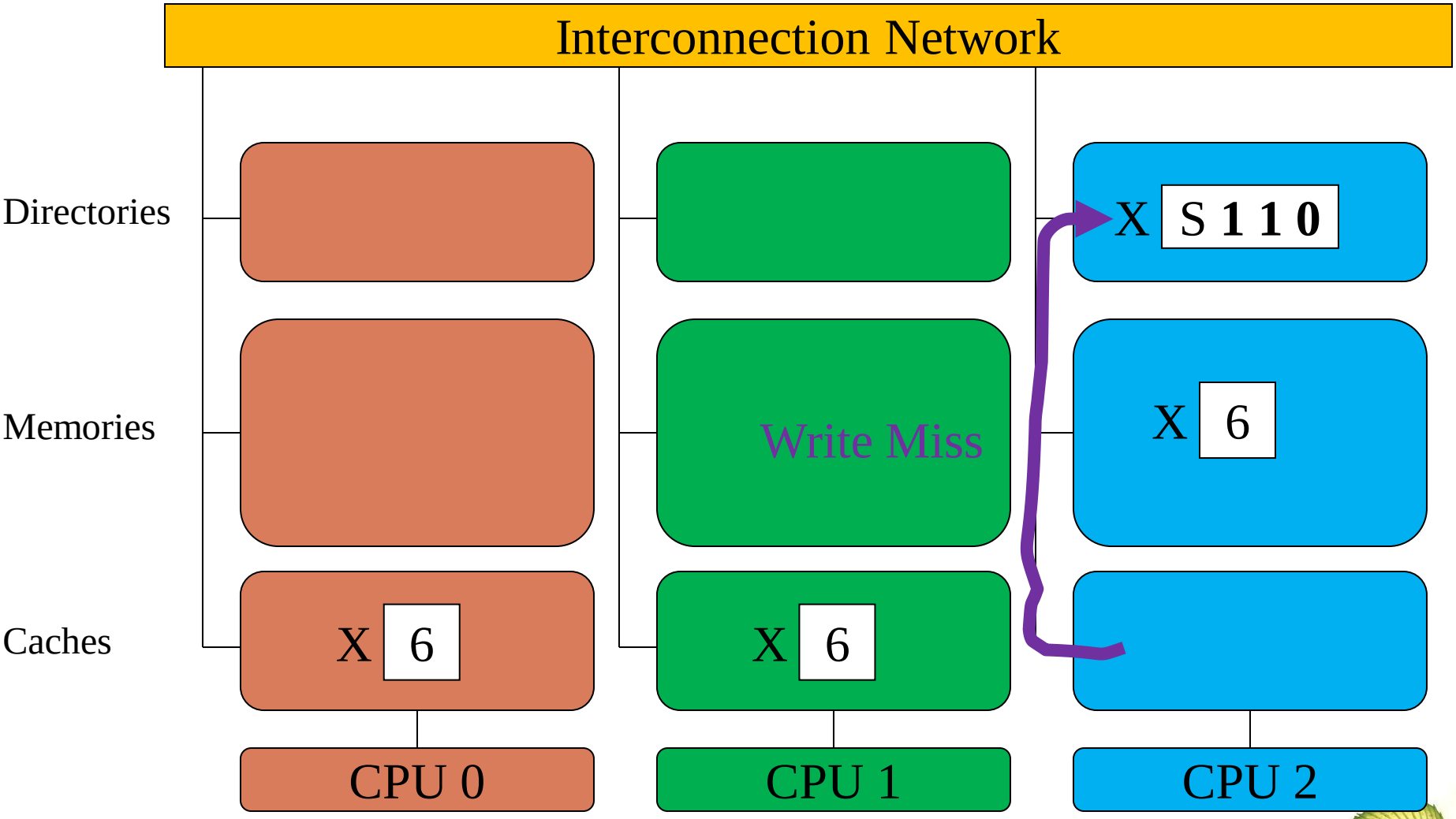

CPU 2 Writes 5 to X – Step 17

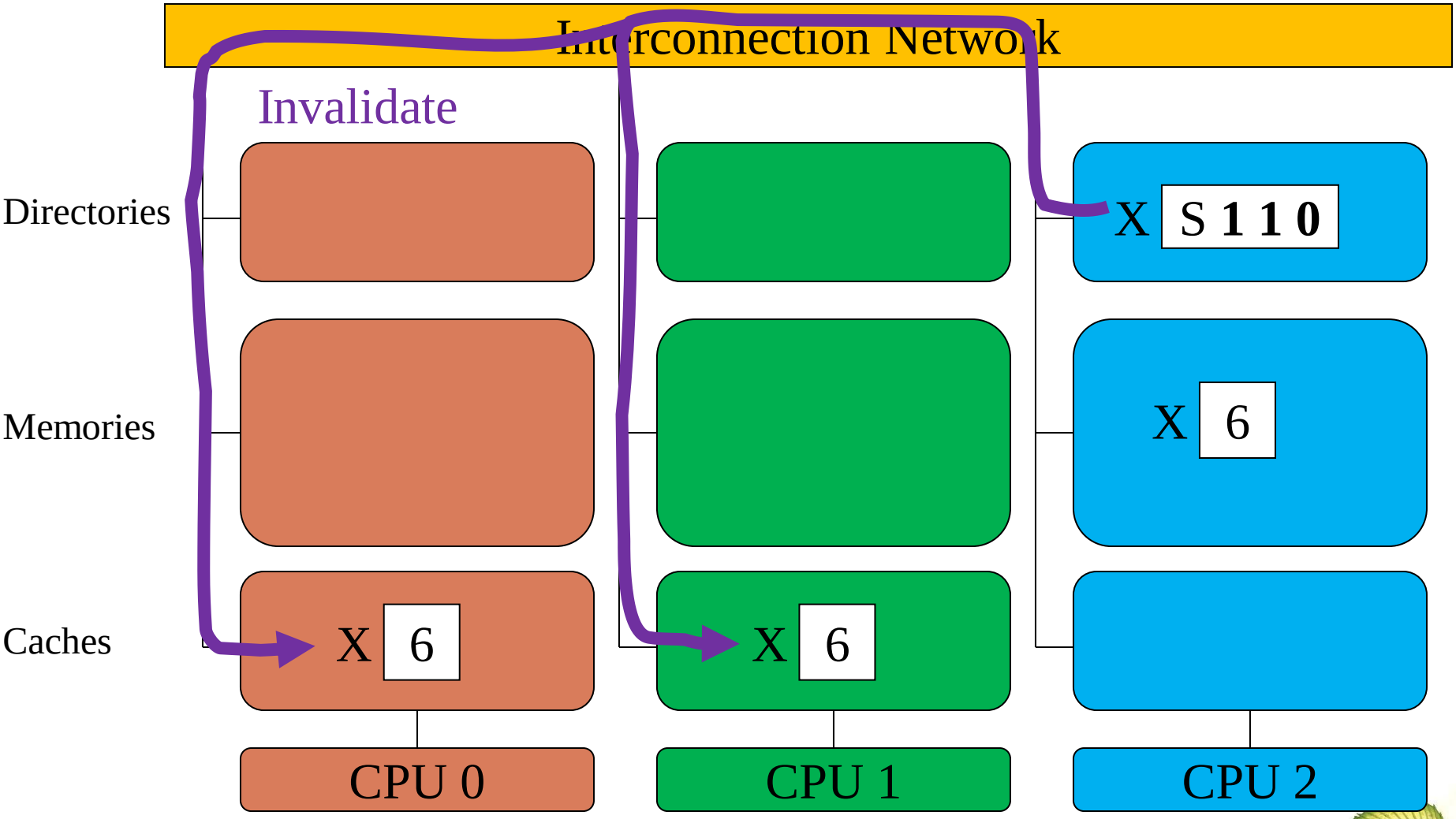

CPU 2 Writes 5 to X – Step 18

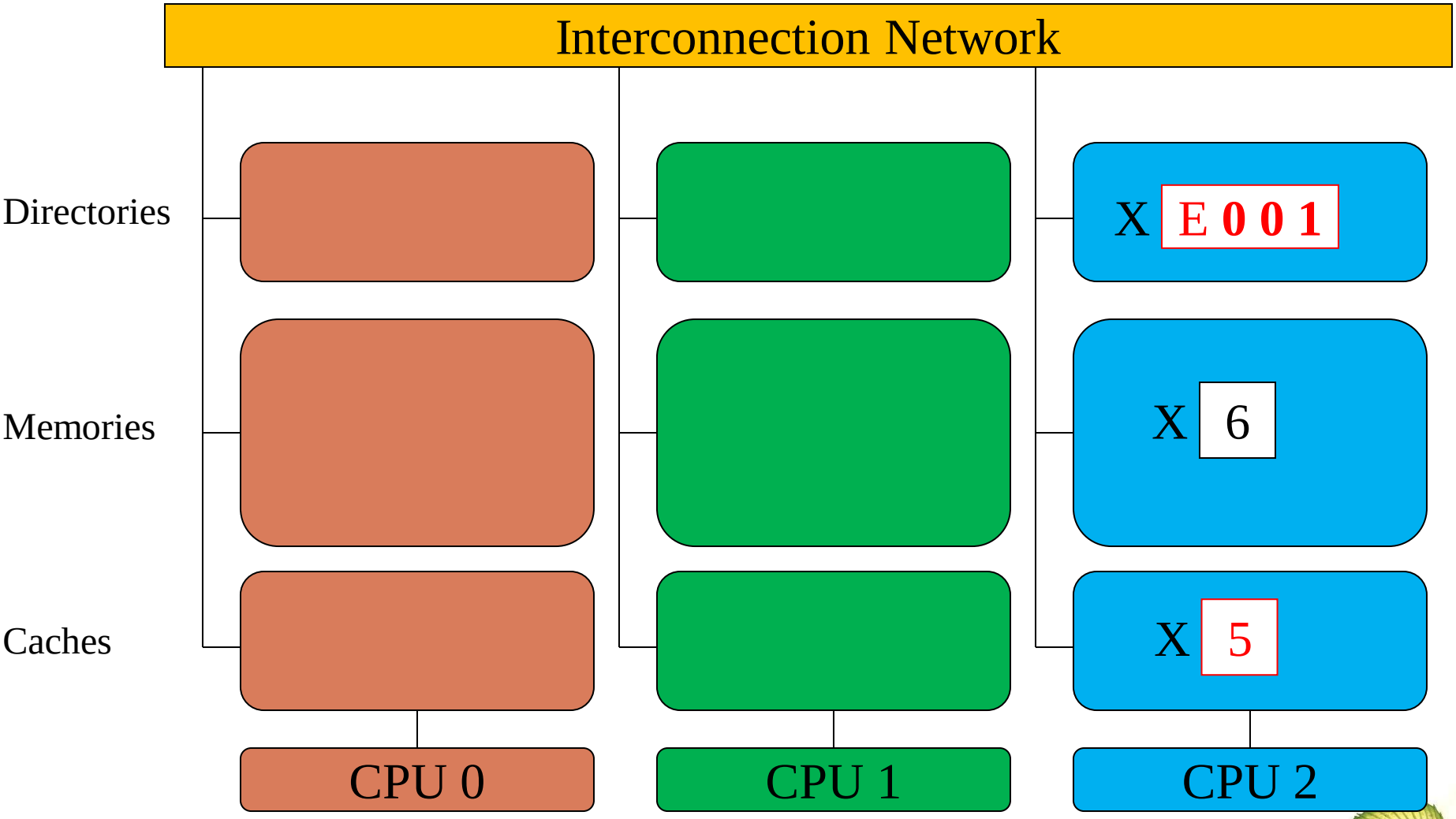

CPU 0 Writes 4 to X – Step 19

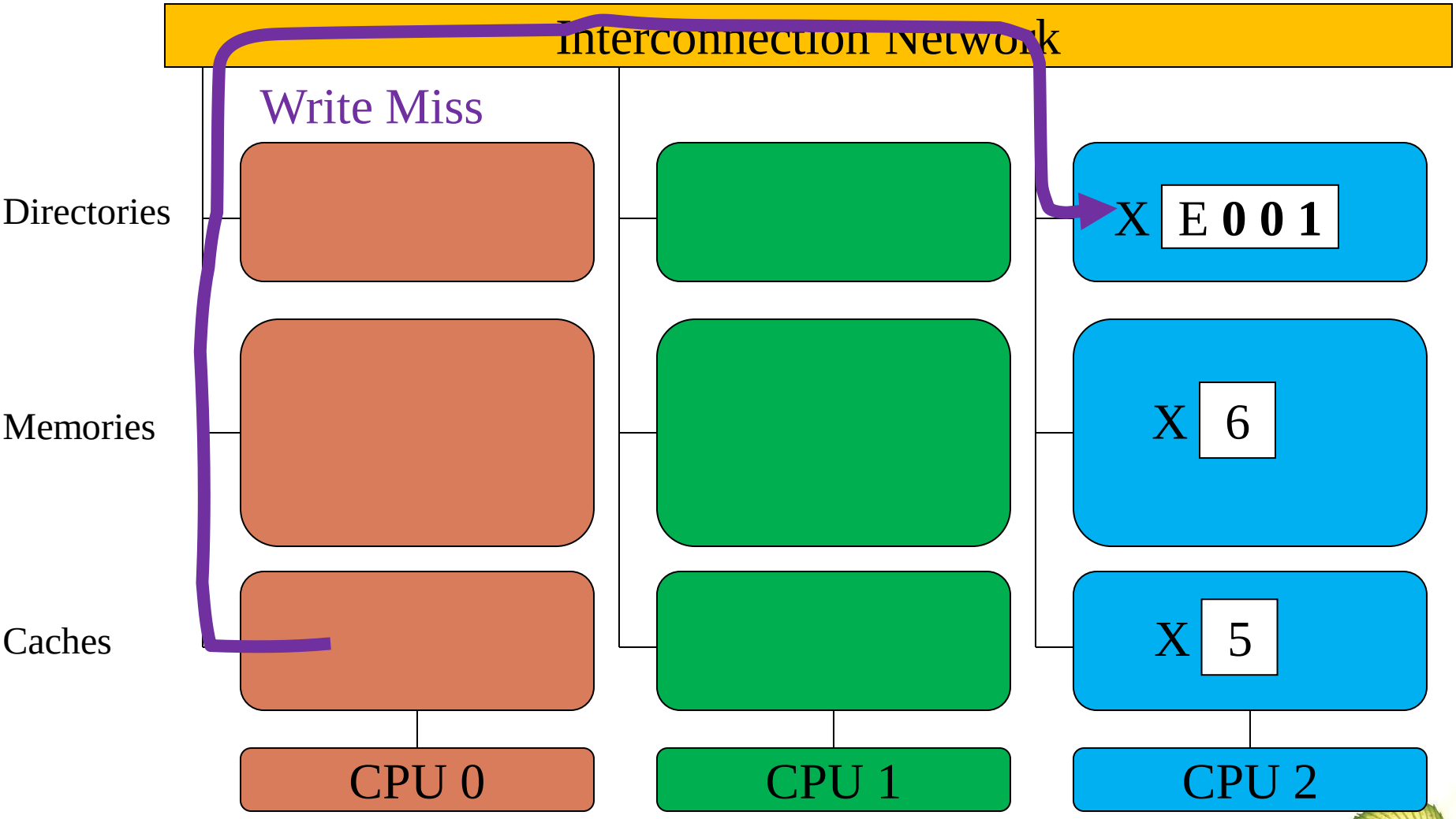

CPU 0 Writes 4 to X – Step 20

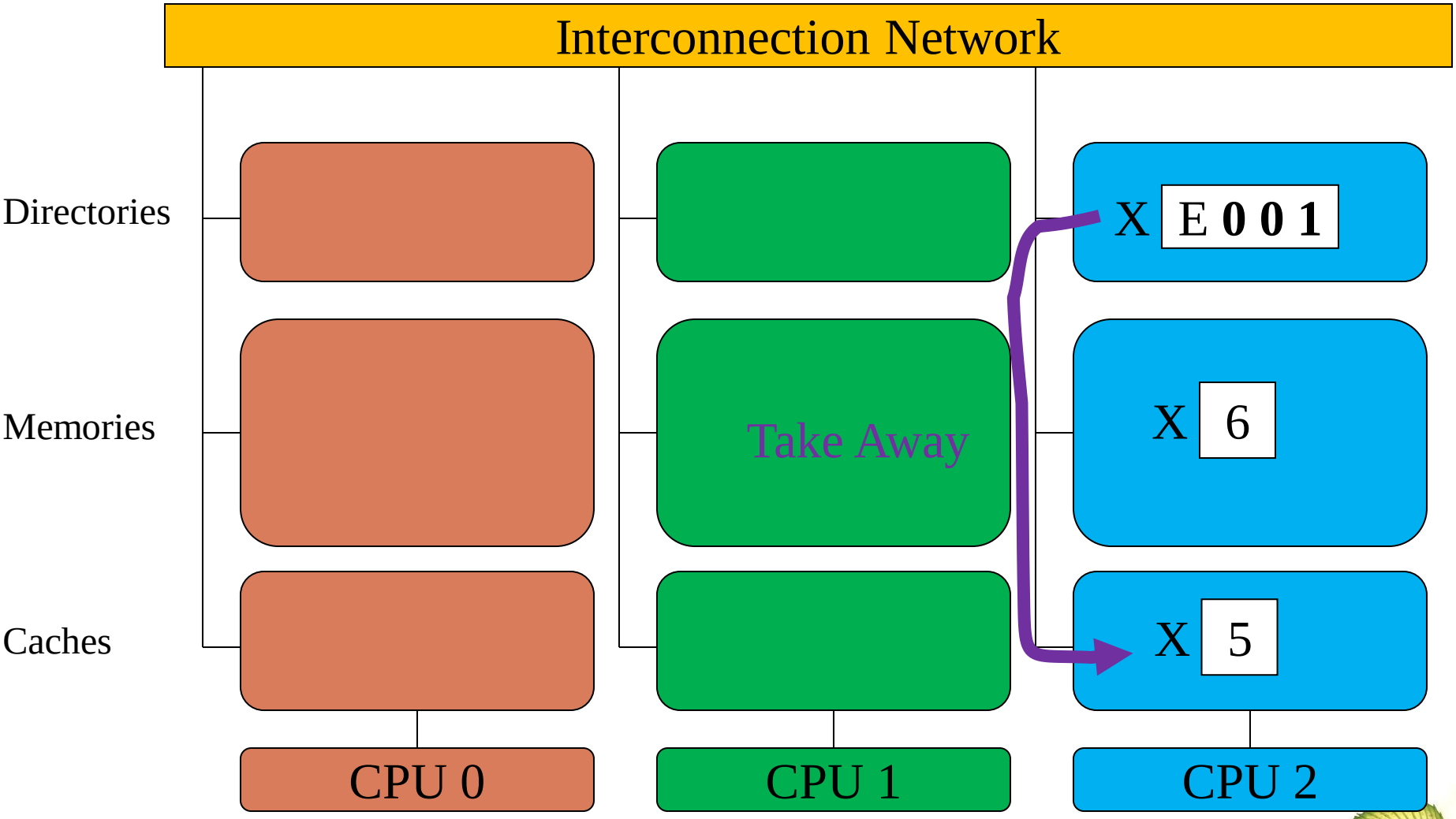

CPU 0 Writes 4 to X – Step 21

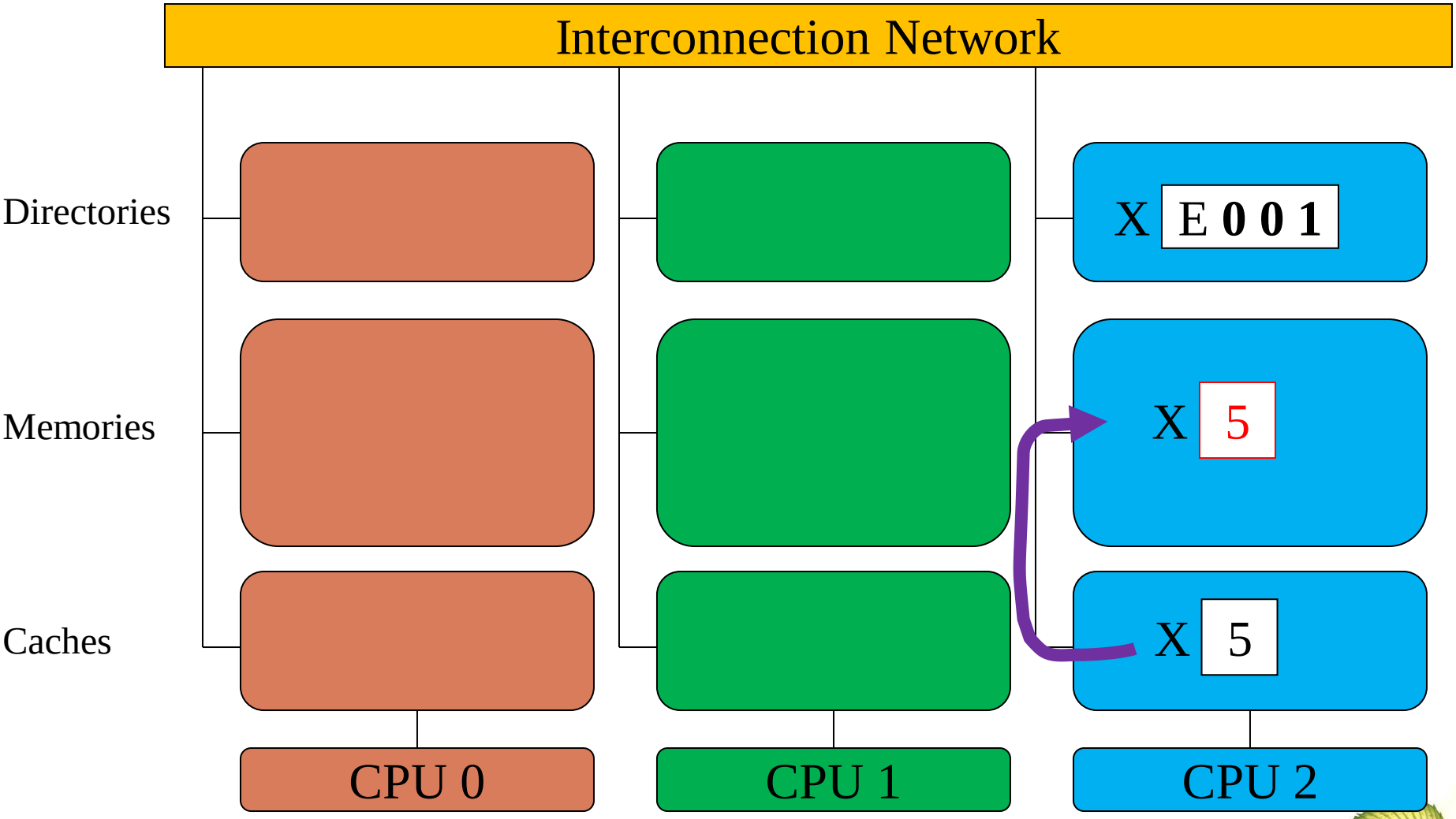

CPU 0 Writes 4 to X – Step 22

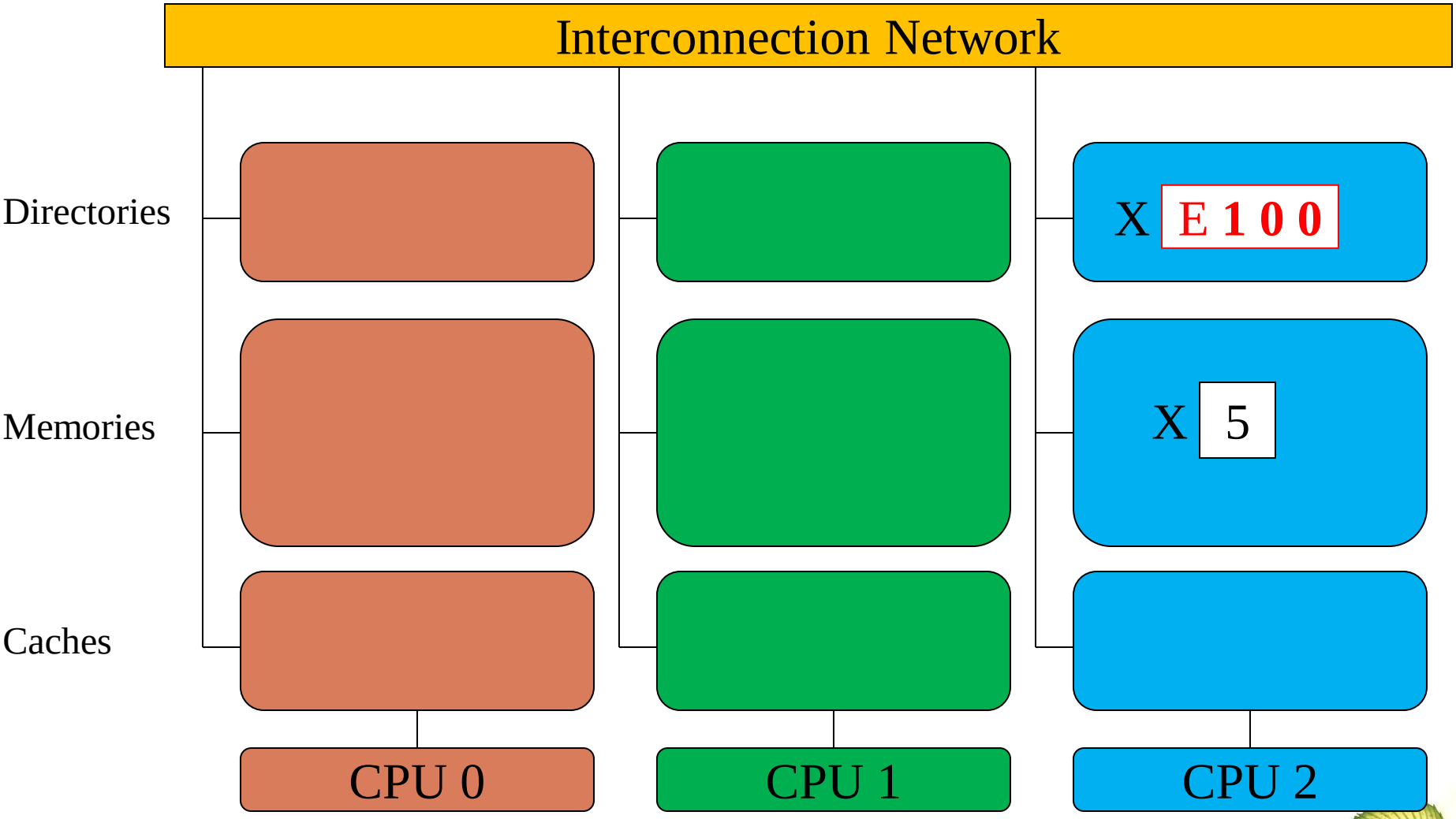

CPU 0 Writes 4 to X – Step 23

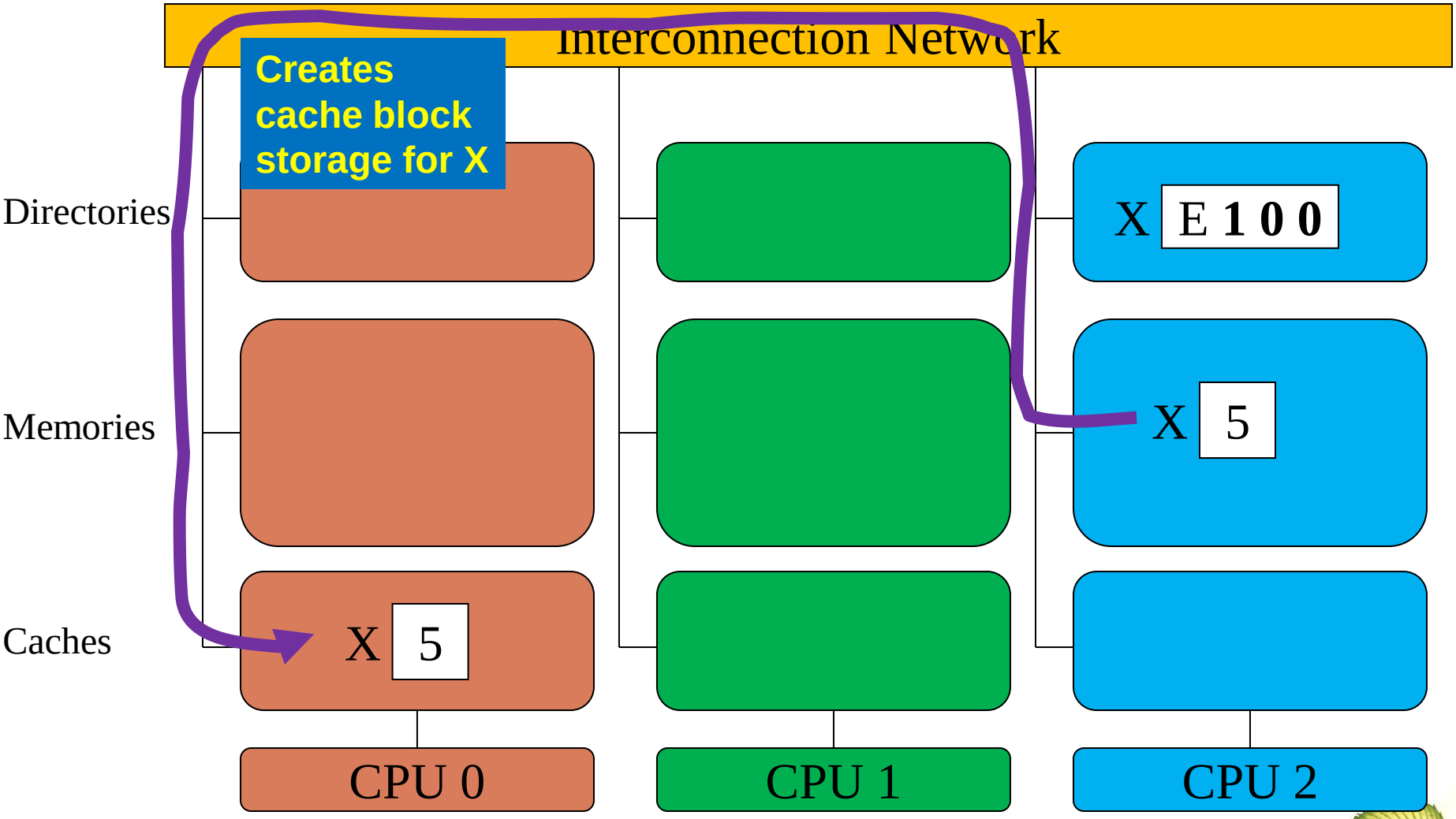

CPU 0 Writes 4 to X – Step 24

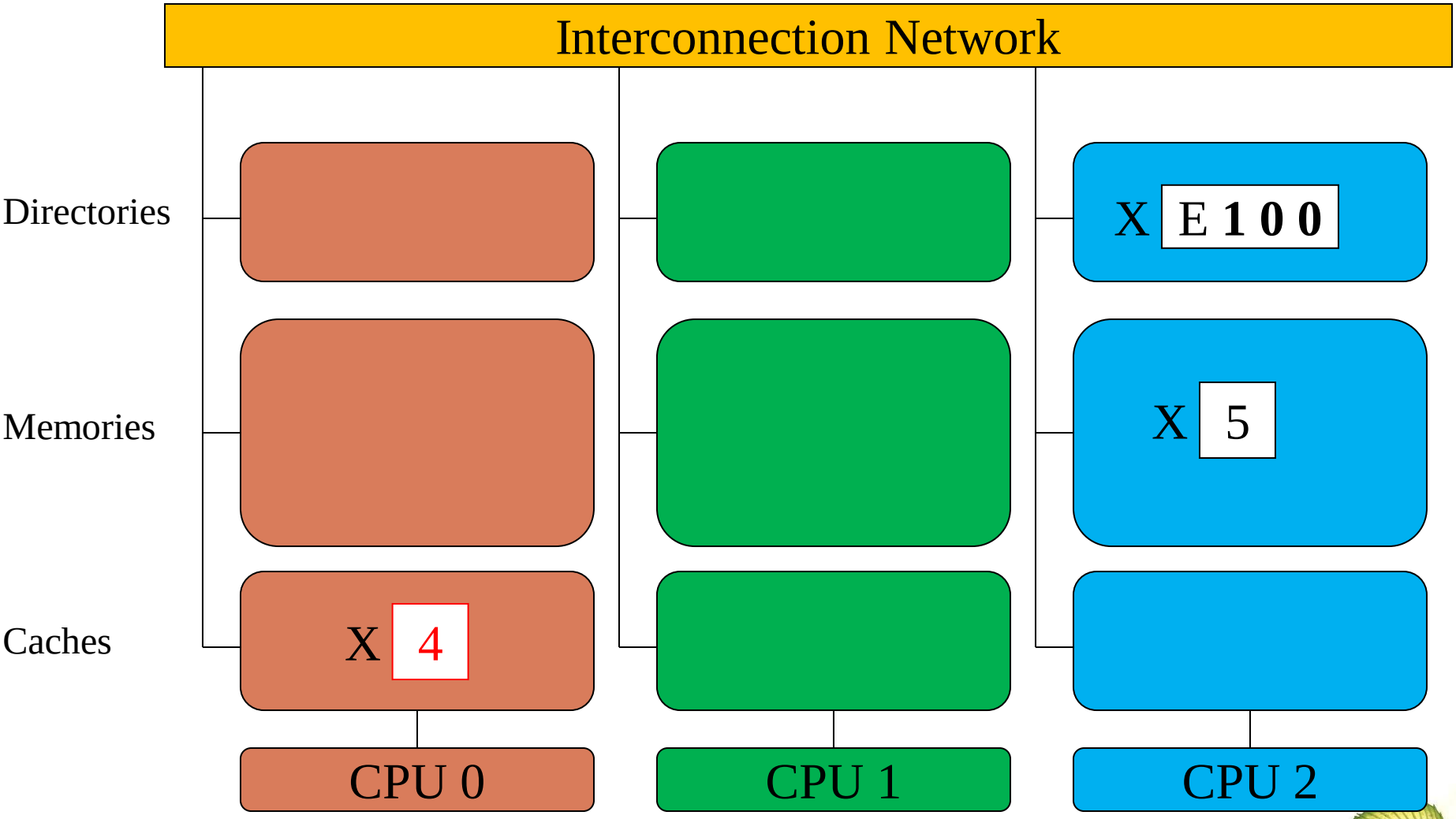

CPU 0 Writes Back X Block – Step 25

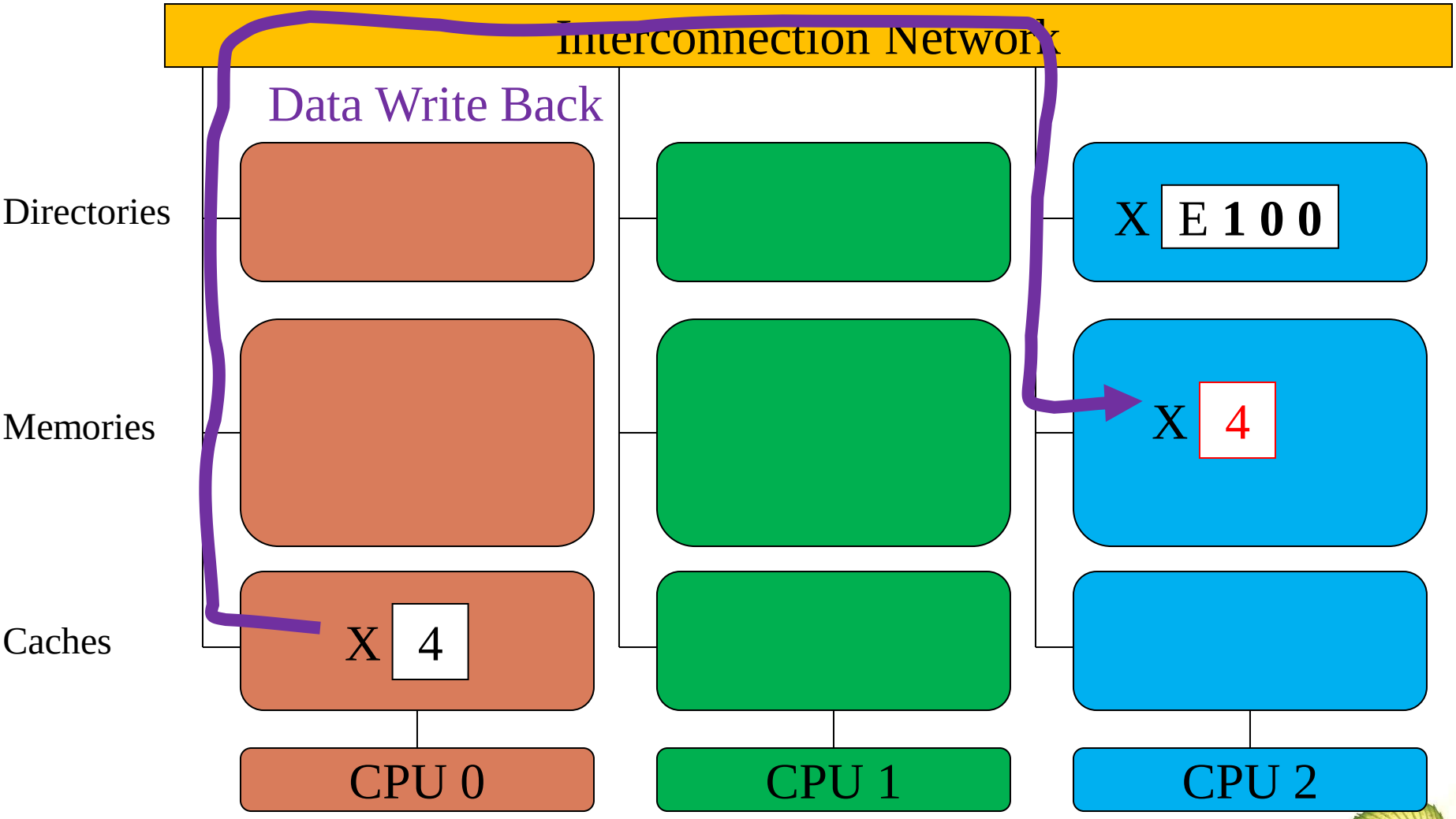

CPU 0 flushes cache block X – Step 26

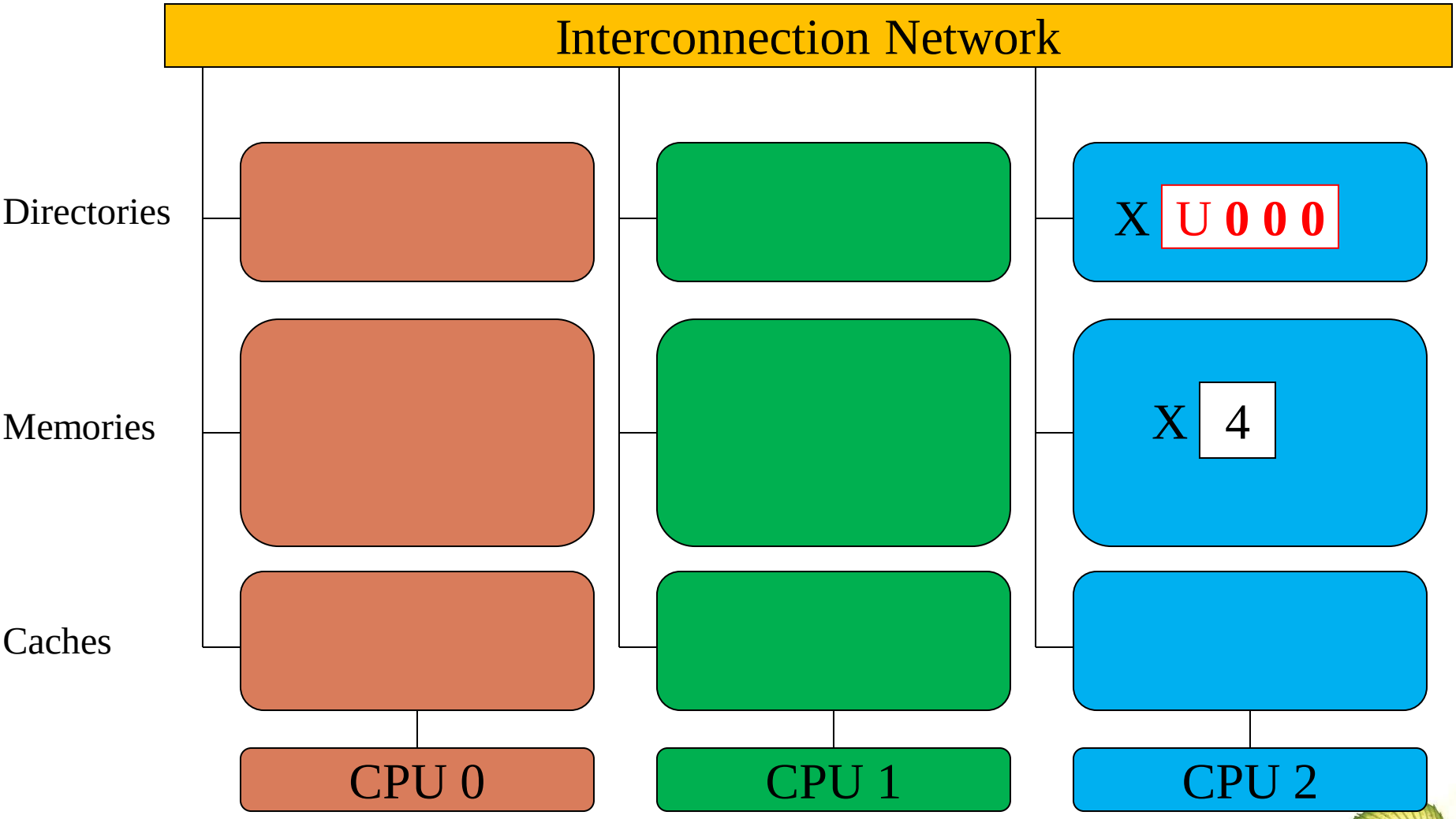

Synchronization Hardware

Many systems provide hardware support for implementing the critical section code.

Uniprocessors – could disable interrupts

- Currently running code would execute without preemption
- Generally too inefficient on multiprocessor systems
  - Operating systems using this not broadly scalable

We will look at three forms of hardware support:

1. Memory barriers

2. Hardware instructions

3. Atomic variables

Memory Barriers

Memory model are the memory guarantees a computer architecture makes to application programs.

Memory models may be either:

- **Strongly ordered** – where a memory modification of one processor is immediately visible to all other processors.
- **Weakly ordered** – where a memory modification of one processor may not be immediately visible to all other processors.

A **memory barrier** is an instruction that forces any change in memory to be propagated (made visible) to all other processors.

Memory Barrier

We could add a memory barrier to the following instructions to ensure Thread 1 outputs 100:

Thread 1 now performs

```
while (!flag)
    memory_barrier();
print x
```

Thread 2 now performs

```
x = 100;
memory_barrier();
flag = true
```

Memory Barrier

Store memory barrier (or write memory barrier)

A store memory barrier ensures that no STORE operation can move across the barrier. The equivalent CPU instruction is *SFENCE*

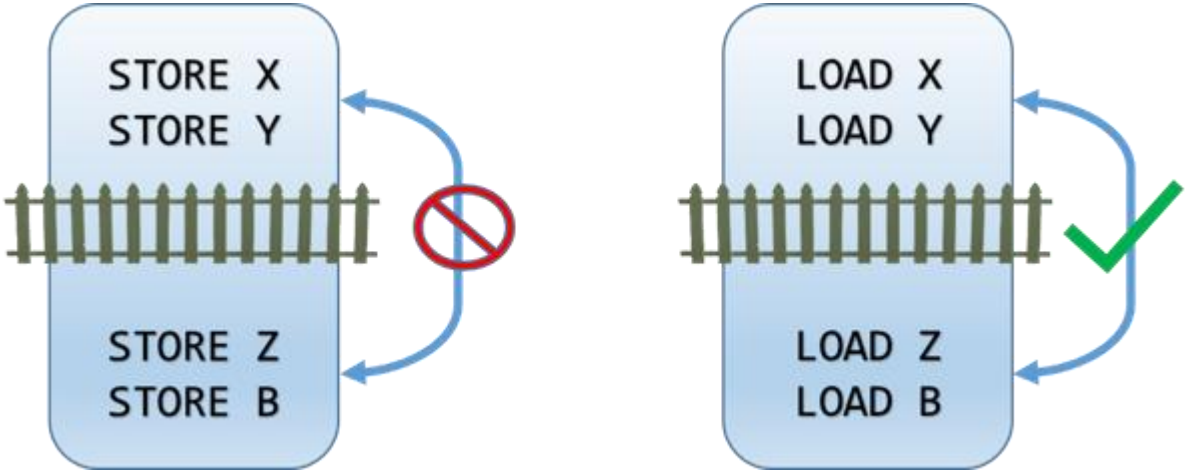

Memory Barrier

Load memory barrier (or read memory barrier)

A load memory barrier ensures that no LOAD operation can move across the barrier. The equivalent CPU instruction is *LFENCE*

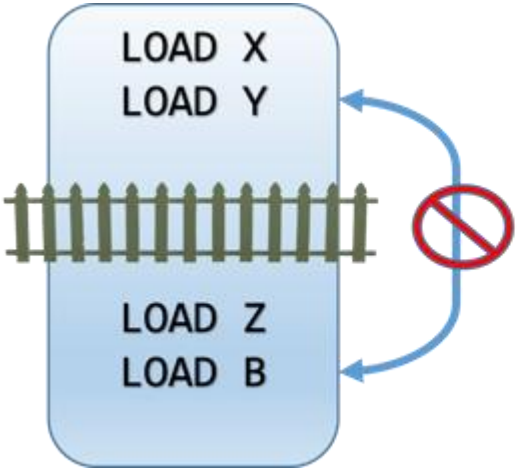

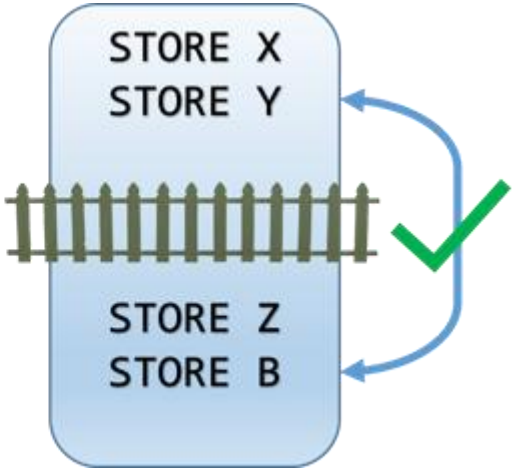

Memory Barrier

Full memory barrier

A full memory barrier ensures that no STORE or LOAD operation can move across the barrier. The equivalent CPU instruction is *MFENCE*

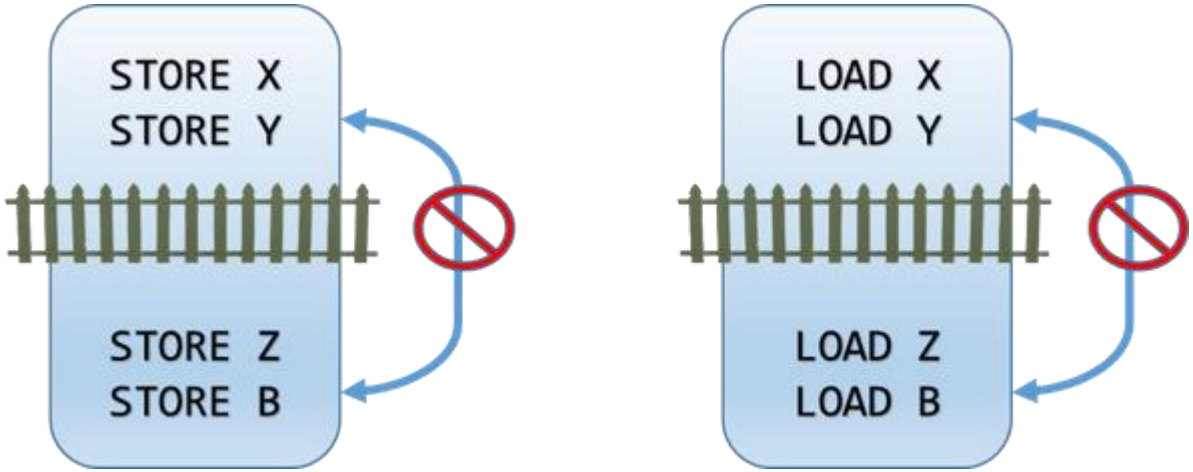

Hardware Instructions

Special hardware instructions that allow us to either *test-and-modify* the content of a word, or two *swap* the contents of two words atomically (uninterruptibly.)

Test-and-Set instruction

Compare-and-Swap instruction

test_and_set Instruction

Definition:

```
boolean test_and_set (boolean *target)
{
        boolean rv = *target;
        *target = true;
        return rv:
}
```

1. Executed atomically
2. Returns the original value of passed parameter
3. Set the new value of passed parameter to **`true`**

Solution using test_and_set()

Shared boolean variable **`lock`**, initialized to **`false`**

Solution:

```
do {
      while (test_and_set(&lock))
       ; /* do nothing */

            /* critical section */

    lock = false;
            /* remainder section */
 } while (true);
```

compare_and_swap Instruction

Definition:

```
   int compare_and_swap(int *value, int expected, int
new_value) {
       int temp = *value;


       if (*value == expected)
          *value = new_value;
    return temp;
   }
```

1. Executed atomically
2. Returns the original value of passed parameter **`value`**
3. Set the variable **`value`** the value of the passed parameter **`new_value`** but only if **`*value == expected`** is true. That is, the swap takes place only under this condition.

Solution using compare_and_swap

Shared integer **`lock`** initialized to 0;

Solution:

```
while (true){
 while (compare_and_swap(&lock, 0, 1) != 0)
            ; /* do nothing */

     /* critical section */

     lock = 0;

    /* remainder section */
}
```

Bounded-waiting Mutual Exclusion with compare-and-swap

```
while (true) {
   waiting[i] = true;
   key = 1;
   while (waiting[i] && key == 1)
      key = compare_and_swap(&lock,0,1);
   waiting[i] = false;
   /* critical section */
   j = (i + 1) % n;
   while ((j != i) && !waiting[j])
      j = (j + 1) % n;
   if (j == i)
      lock = 0;
   else
      waiting[j] = false;
   /* remainder section */
}
```

Atomic Variables

Typically, instructions such as compare-and-swap are used as building blocks for other synchronization tools.

One tool is an **atomic variable** that provides *atomic* (uninterruptible) updates on basic data types such as integers and booleans.

For example, the **`increment()`** operation on the atomic variable **`sequence`** ensures **`sequence`** is incremented without interruption:

```
increment(&sequence);
```

Atomic Variables

The **`increment()`** function can be implemented as follows:

```
void increment(atomic_int *v)
{
    int temp;

    do {
          temp = *v;
    }
    while (temp !=
(compare_and_swap(v,temp,temp+1));
}
```

Mutex Locks

Previous solutions are complicated and generally inaccessible to application programmers

OS designers build software tools to solve critical section problem

Simplest is mutex lock

Protect a critical section by first **`acquire()`** a lock then **`release()`** the lock

- Boolean variable indicating if lock is available or not

Calls to **`acquire()`** and **`release()`** must be atomic

- Usually implemented via hardware atomic instructions such as compare-and-swap.

But this solution requires **busy waiting**

- This lock therefore called a **spinlock**

Solution to Critical-section Problem Using Locks

```
while (true) {
      acquire lock

      critical section

      release lock

      remainder section
}
```

Mutex Lock Definitions

```
acquire() {
   while (!available)
      ; /* busy wait */
   available = false;;
}

release() {
   available = true;
}
```

These two functions must be implemented atomically. Both test-and-set and compare-and-swap can be used to implement these functions.

Semaphore

Synchronization tool that provides more sophisticated ways (than Mutex locks) for process to synchronize their activities.

Semaphore ***S*** – integer variable

Can only be accessed via two indivisible (atomic) operations

`wait()` and **`signal()`**

- (Originally called **`P()`** and **`V()`**)

Definition of the **`wait() operation`**

```
wait(S) {
    while (S <= 0)
        ; // busy wait
    S--;
}
```

Definition of the **`signal() operation`**

```
signal(S) {
    S++;
}
```

Semaphore Usage

Counting semaphore – integer value can range over an unrestricted domain

Binary semaphore – integer value can range only between 0 and 1

Same as a **mutex lock**

Can solve various synchronization problems

Consider P_1 and P_2 that require S_1 to happen before S_2

Create a semaphore "**synch**" initialized to 0

```
P1:
    S1;
    signal(synch);
P2:
    wait(synch);
    S2;
```

Can implement a counting semaphore ***S*** as a binary semaphore

Semaphore Implementation

Must guarantee that no two processes can execute the **`wait()`** and **`signal()`** on the same semaphore at the same time

Thus, the implementation becomes the critical section problem where the **`wait`** and **`signal`** code are placed in the critical section

Could now have **busy waiting** in critical section implementation

- But implementation code is short
- Little busy waiting if critical section rarely occupied

Note that applications may spend lots of time in critical sections and therefore this is not a good solution

Semaphore Implementation with no Busy waiting

With each semaphore there is an associated waiting queue

Each entry in a waiting queue has two data items:

- value (of type integer)
- pointer to next record in the list

Two operations:

- **block** – place the process invoking the operation on the appropriate waiting queue
- **wakeup** – remove one of processes in the waiting queue and place it in the ready queue

```
typedef struct {
    int value;
    struct process *list;
} semaphore;
```

Implementation with no Busy waiting (Cont.)

```
wait(semaphore *S) {
   S->value--;
   if (S->value < 0) {
      add this process to S->list;
      block();
   }
}

signal(semaphore *S) {
   S->value++;
   if (S->value <= 0) {
      remove a process P from S->list;
      wakeup(P);
   }
}
```

Problems with Semaphores

Incorrect use of semaphore operations:

`signal (mutex)` …. **`wait (mutex)`**

`wait (mutex)` … **`wait (mutex)`**

Omitting of **`wait (mutex)`** and/or **`signal (mutex)`**

These – and others – are examples of what can occur when sempahores and other synchronization tools are used incorrectly.

Monitors

A high-level abstraction that provides a convenient and effective mechanism for process synchronization

Abstract data type, internal variables only accessible by code within the procedure

Only one process may be active within the monitor at a time

Pseudocode syntax of a monitor:

```
monitor monitor-name
{
  // shared variable declarations
  function P1 (…) { …. }

  function P2 (…) { …. }

  function Pn (…) {……}

   initialization code (…) { … }
}
```

Schematic view of a Monitor

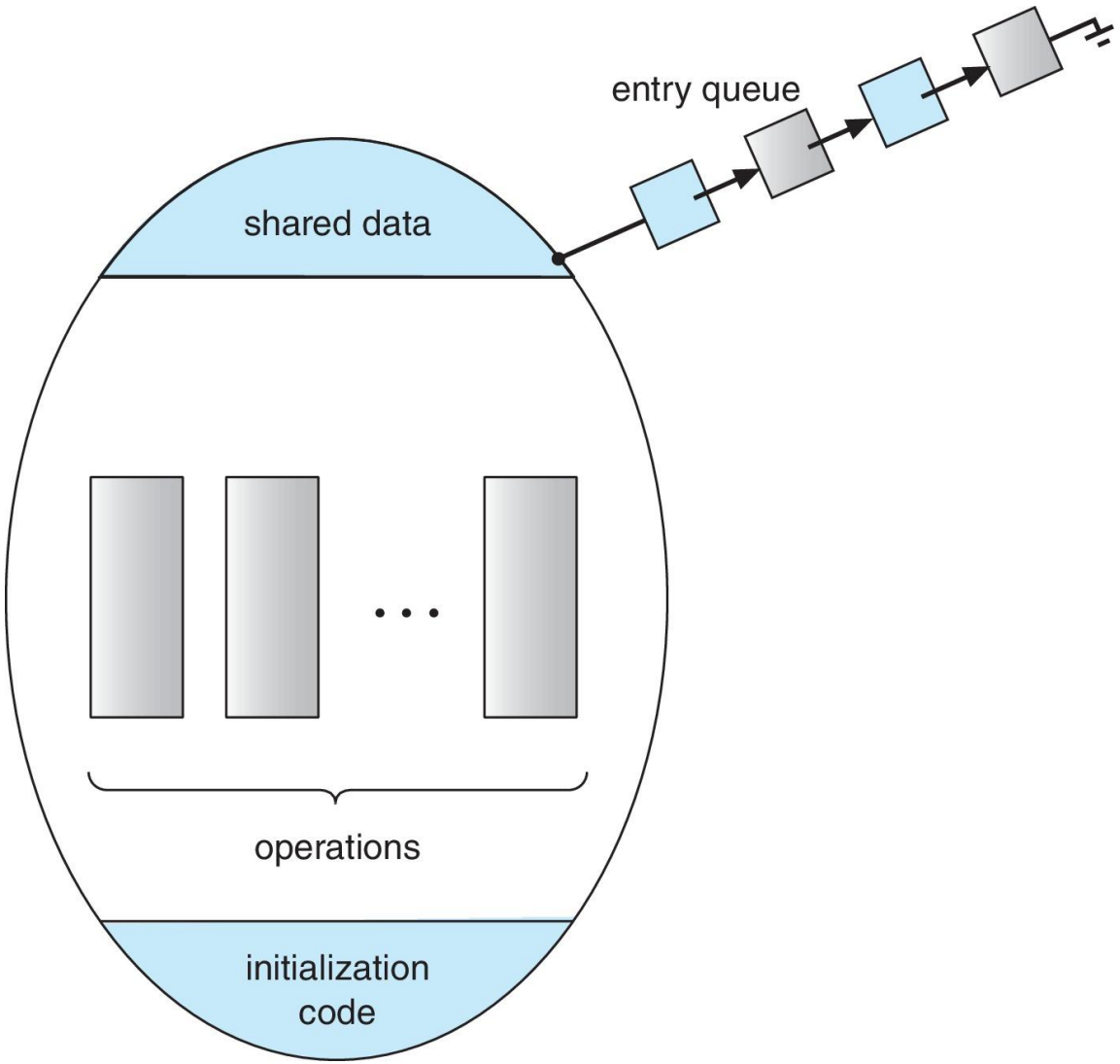

Condition Variables

`condition x, y;`

Two operations are allowed on a condition variable:

`x.wait()` – a process that invokes the operation is suspended until **`x.signal()`**

`x.signal()` – resumes one of processes (if any) that invoked **`x.wait()`**

- If no **`x.wait()`** on the variable, then it has no effect on the variable

Monitor with Condition Variables

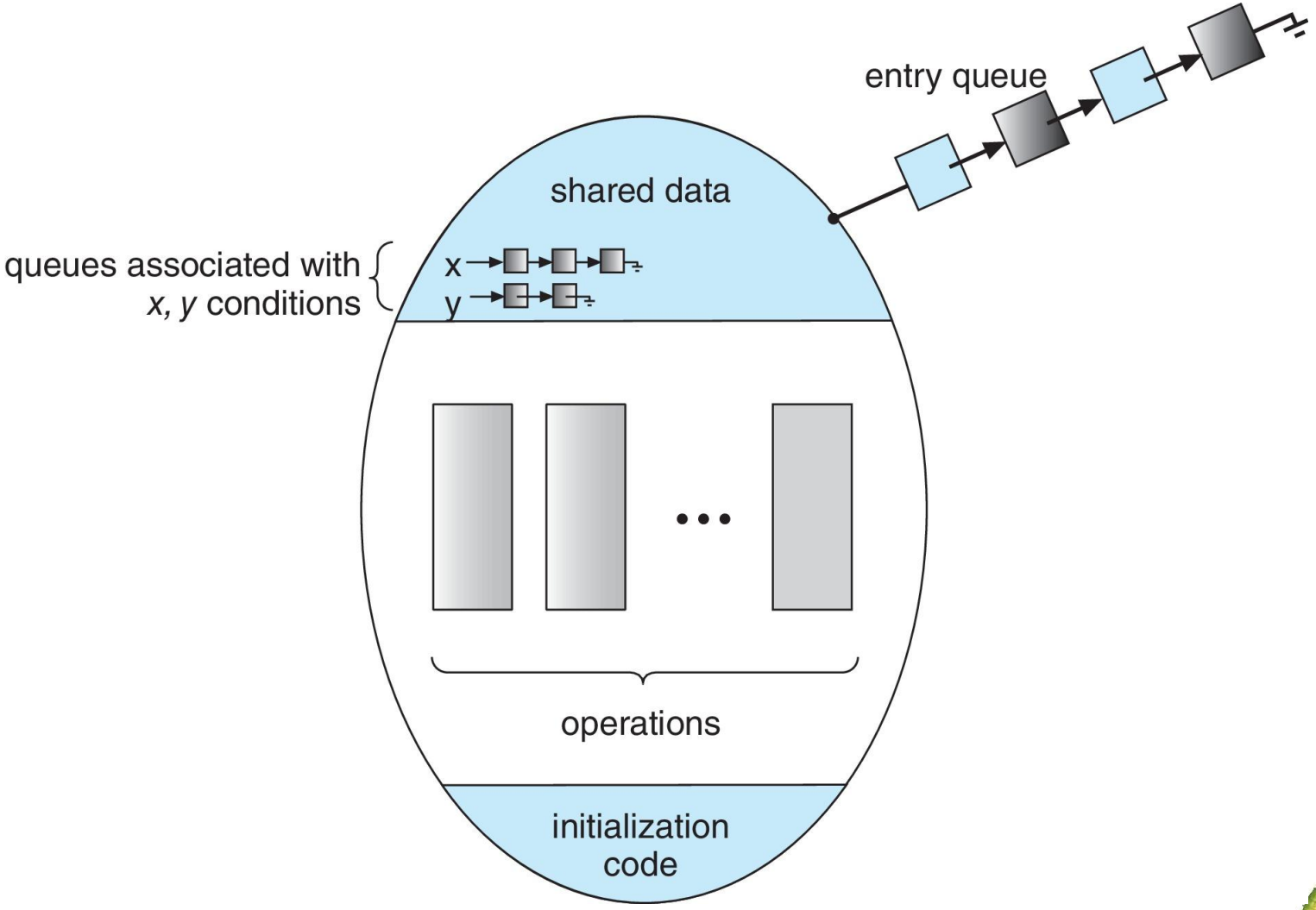

Condition Variables Choices

If process P invokes **`x.signal()`**, and process Q is suspended in **`x.wait()`**, what should happen next?

- Both Q and P cannot execute in paralel. If Q is resumed, then P must wait

Options include

- **Signal and wait** – P waits until Q either leaves the monitor or it waits for another condition
- **Signal and continue** – Q waits until P either leaves the monitor or it waits for another condition
- Both have pros and cons – language implementer can decide
- Monitors implemented in Concurrent Pascal compromise
  - P executing signal immediately leaves the monitor, Q is resumed
- Implemented in other languages including Mesa, C#, Java

Monitor Implementation Using Semaphores

Variables

```
semaphore mutex;  // (initially  = 1)
semaphore next;   // (initially  = 0)
int next_count = 0;
```

Each function ***F*** will be replaced by

```
wait(mutex);
     …
     body of F;
     …
if (next_count > 0)
  signal(next)
else
  signal(mutex);
```

Mutual exclusion within a monitor is ensured

Monitor Implementation – Condition Variables

For each condition variable ***x***, we have:

```
semaphore x_sem; // (initially  = 0)
int x_count = 0;
```

The operation **`x.wait()`** can be implemented as:

```
x_count++;
if (next_count > 0)
   signal(next);
else
   signal(mutex);
wait(x_sem);
x_count--;
```

Monitor Implementation (Cont.)

The operation **`x.signal()`** can be implemented as:

```
if (x_count > 0) {
  next_count++;
  signal(x_sem);
  wait(next);
  next_count--;
}
```

Resuming Processes within a Monitor

If several processes queued on condition variable **`x`**, and **`x.signal()`** is executed, which process should be resumed?

FCFS frequently not adequate

conditional-wait construct of the form **`x.wait(c)`**

- Where **`c`** is **priority number**
- Process with lowest number (highest priority) is scheduled next

Single Resource allocation

Allocate a single resource among competing processes using priority numbers that specify the maximum time a process plans to use the resource

```
R.acquire(t);
    ...
  access the resurce;
    ...

R.release;
```

Where R is an instance of type **`ResourceAllocator`**

A Monitor to Allocate Single Resource

```
monitor ResourceAllocator
{
   boolean busy;
   condition x;
   void acquire(int time) {
           if (busy)
              x.wait(time);
           busy = true;
   }
   void release() {
           busy = FALSE;
           x.signal();
   }
    initialization code() {
    busy = false;
   }
}
```

Liveness

Processes may have to wait indefinitely while trying to acquire a synchronization tool such as a mutex lock or semaphore.

Waiting indefinitely violates the progress and bounded-waiting criteria discussed at the beginning of this chapter.

Liveness refers to a set of properties that a system must satisfy to ensure processes make progress.

Indefinite waiting is an example of a liveness failure.

Liveness

Deadlock – two or more processes are waiting indefinitely for an event that can be caused by only one of the waiting processes

Let ***S*** and ***Q*** be two semaphores initialized to 1

P_0	P_1
`wait(S);`	`wait(Q);`
`wait(Q);`	`wait(S);`
`...`	`...`
`signal(S);`	`signal(Q);`
`signal(Q);`	`signal(S);`

Consider if P_0 executes wait(S) and P_1 wait(Q). When P_0 executes wait(Q), it must wait until P_1 executes signal(Q)

However, P_1 is waiting until P_0 execute signal(S).

Since these signal() operations will never be executed, P_0 and P_1 are **deadlocked**.

Liveness

Other forms of deadlock:

Starvation – indefinite blocking

A process may never be removed from the semaphore queue in which it is suspended

Priority Inversion – Scheduling problem when lower-priority process holds a lock needed by higher-priority process

Consider the scenario with three processes **P1, P2**, and **P3**. **P1** has the highest priority, **P2** the next highest, and **P3** the lowest. Assume a resource **P3** is assigned a resource **R** that **P1** wants. Thus, **P1** must wait for **P3** to finish using the resource. However, **P2** becomes runnable and preempts **P3**. What has happened is that **P2** - a process with a lower priority than **P1** - has indirectly prevented **P3** from gaining access to the resource.

Priority Inversion

Provided by Gemini and Nano banana 2

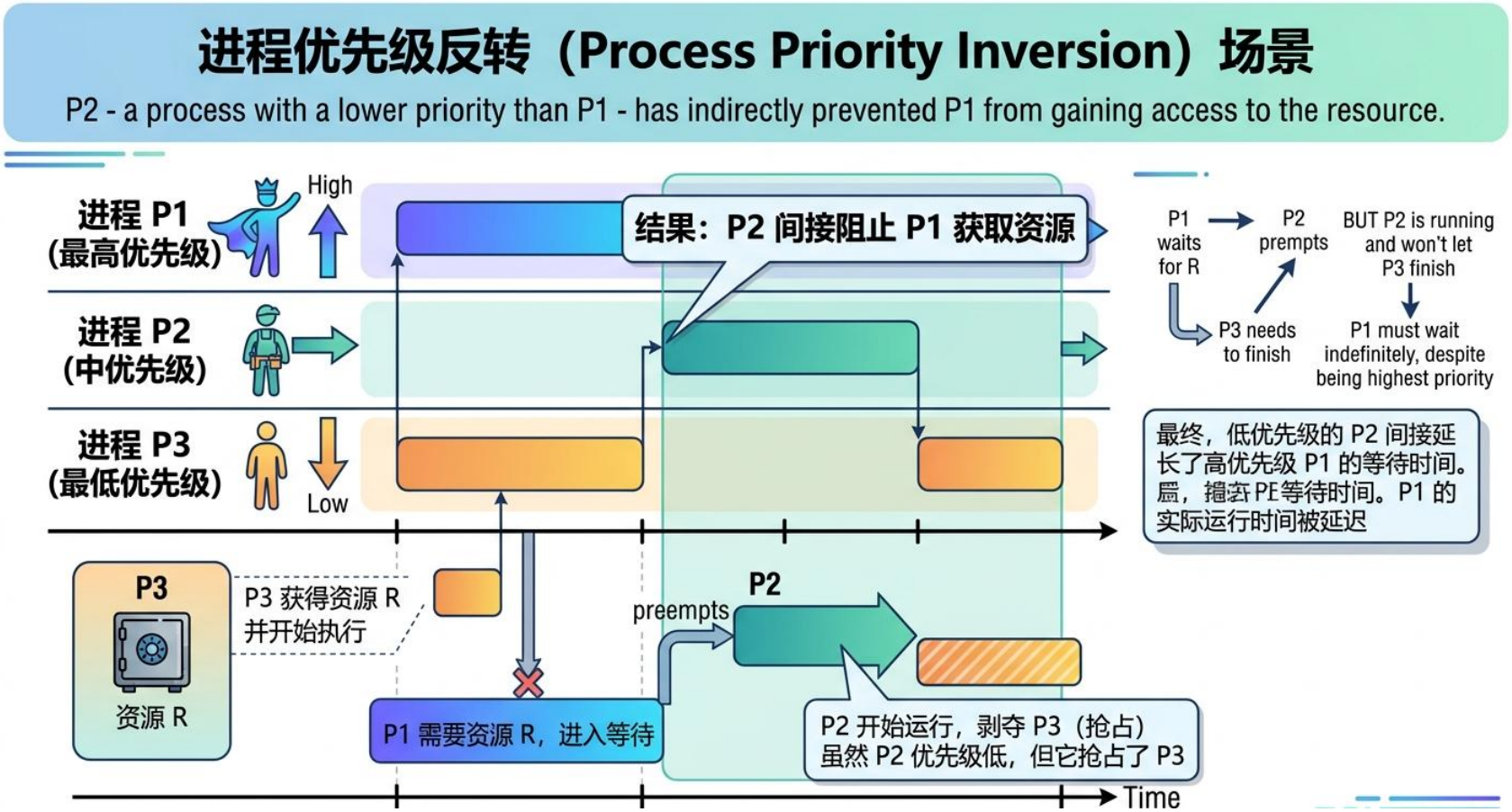

Solution-Priority Inheritance Protocol

To prevent this from occurring, a **priority inheritance protocol** is used. This simply allows the priority of the highest thread waiting to access a shared resource to be assigned to the thread currently using the resource. Thus, the current owner of the resource is assigned the priority of the highest priority thread wishing to acquire the resource.

Homework

- Exercises at the end of Chapter 6 (OS book, 10th Edition)
  - 6.8, 6.13, 6.21
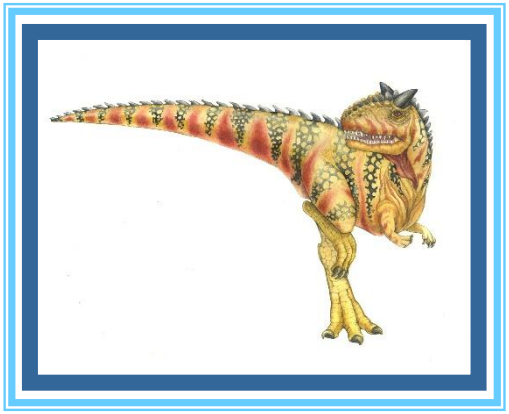
End of Chapter 6