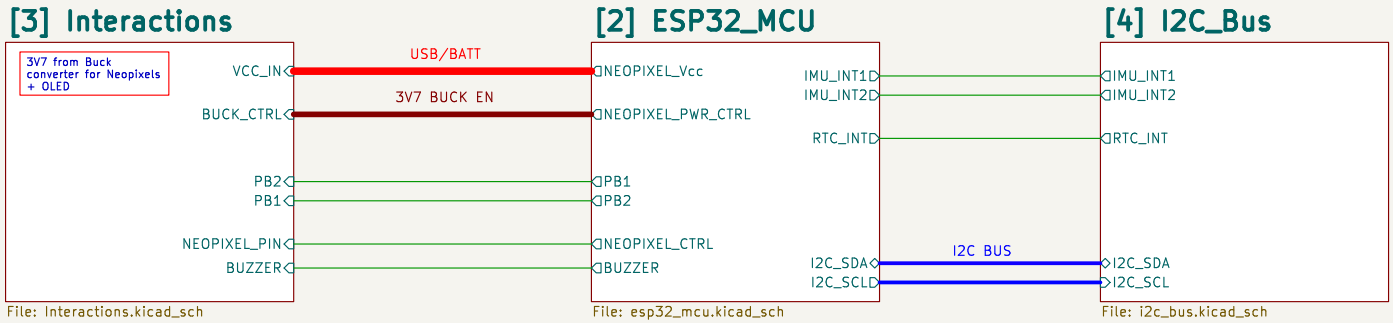

[1] Mechanical & Misc

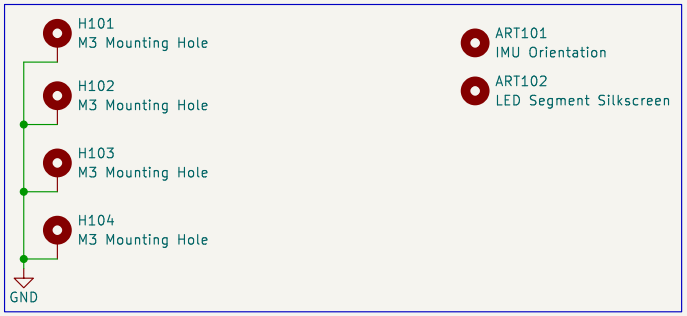

Authour: Samuel Yow

Sheet: /
File: AlarmClockProjV1.kicad_sch

Title: ESP32S3 Alarm Clock

Size: A4	Date:	**Rev:**
KiCad E.D.A. kicad 7.0.9		Id: 1/4

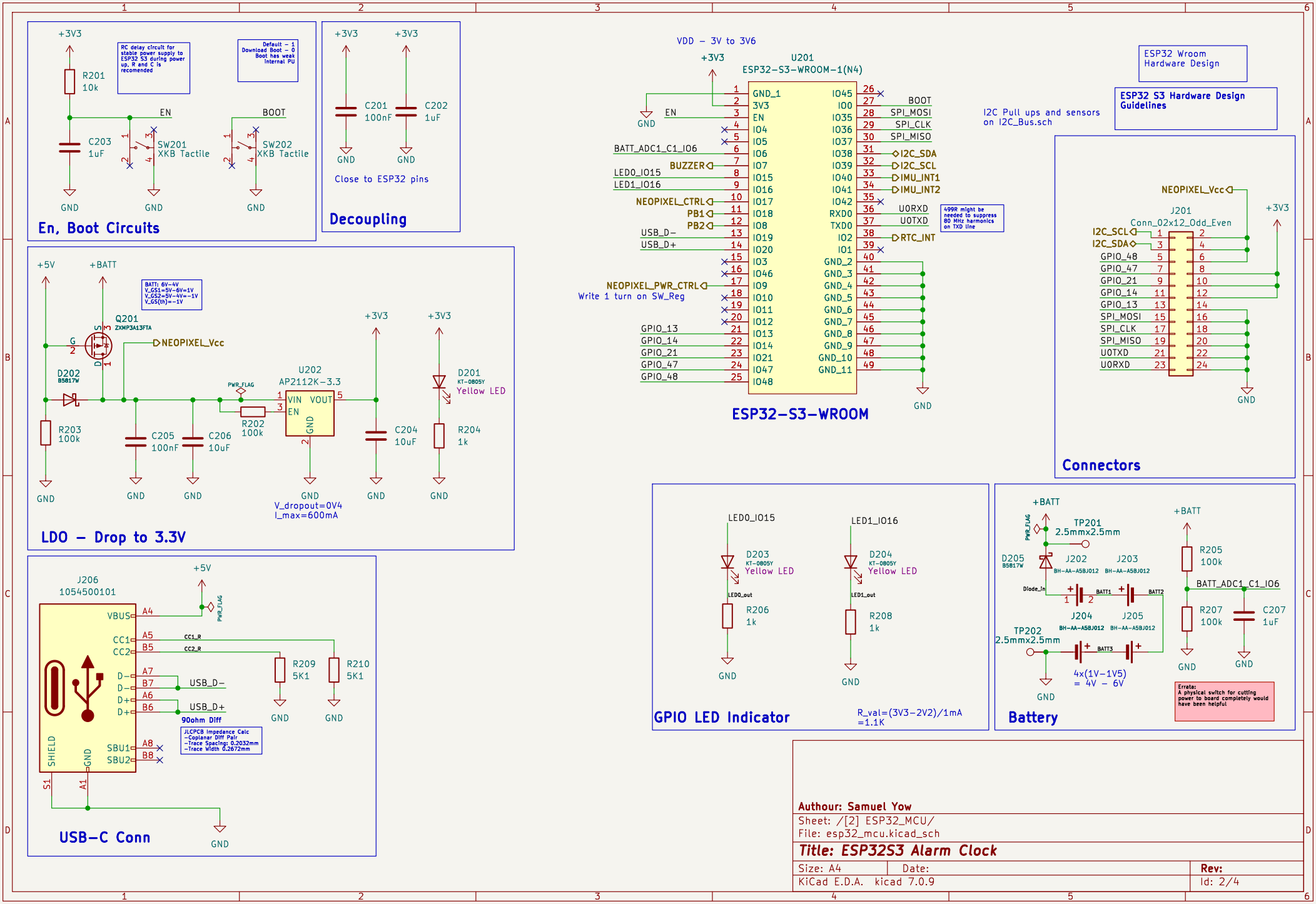
En, Boot Circuits
+3V3
R201
10k
RC delay circuit for stable power supply to ESP32 S3 during power up, R and C is recomended
Default - 1
Download Boot - 0
Boot has weak internal PU
EN
BOOT
C203
1uF
SW201
XKB Tactile
SW202
XKB Tactile
GND
Decoupling
C201
100nF
C202
1uF
Close to ESP32 pins
LDO - Drop to 3.3V
+5V
+BATT
BATT: 6V-4V
V_GS1=5V-6V=1V
V_GS2=5V-4V=-1V
V_GS(th)=-1V
Q201
ZXMP3A13FTA
NEOPIXEL_Vcc
D202
B5817W
R203
100k
C205
100nF
C206
10uF
PWR_FLAG
R202
100k
U202
AP2112K-3.3
VIN
VOUT
EN
V_dropout=0V4
I_max=600mA
C204
10uF
D201
KT-0805Y
Yellow LED
R204
1k
USB-C Conn
J206
1054500101
VBUS
CC1
CC2
D-
D+
SHIELD
GND
SBU1
SBU2
S1
A1
CC1_R
CC2_R
USB_D-
USB_D+
90ohm Diff
R209
5K1
R210
5K1
JLCPCB Impedance Calc
-Coplanar Diff Pair
-Trace Spacing: 0.2032mm
-Trace Width 0.2672mm
VDD - 3V to 3V6
U201
ESP32-S3-WROOM-1(N4)
GND_1
3V3
EN
IO4
IO5
IO6
IO7
IO15
IO16
IO17
IO18
IO8
IO19
IO20
IO3
IO46
IO9
IO10
IO11
IO12
IO13
IO14
IO21
IO47
IO48
IO45
IO0
IO35
IO36
IO37
IO38
IO39
IO40
IO41
IO42
RXD0
TXD0
IO2
IO1
GND_2
GND_3
GND_4
GND_5
GND_6
GND_7
GND_8
GND_9
GND_10
GND_11
BATT_ADC1_C1_IO6
BUZZER
LED0_IO15
LED1_IO16
NEOPIXEL_CTRL
PB1
PB2
USB_D-
USB_D+
NEOPIXEL_PWR_CTRL
Write 1 turn on SW_Reg
GPIO_13
GPIO_14
GPIO_21
GPIO_47
GPIO_48
BOOT
SPI_MOSI
SPI_CLK
SPI_MISO
I2C_SDA
I2C_SCL
IMU_INT1
IMU_INT2
U0RXD
U0TXD
RTC_INT
499R might be needed to suppress 80 MHz harmonics on TXD line
ESP32-S3-WROOM
I2C Pull ups and sensors on I2C_Bus.sch
ESP32 Wroom Hardware Design
ESP32 S3 Hardware Design Guidelines
Connectors
J201
Conn_02x12_Odd_Even
NEOPIXEL_Vcc
I2C_SCL
I2C_SDA
GPIO_48
GPIO_47
GPIO_21
GPIO_14
GPIO_13
SPI_MOSI
SPI_CLK
SPI_MISO
U0TXD
U0RXD
GPIO LED Indicator
LED0_IO15
LED1_IO16
D203
KT-0805Y
Yellow LED
D204
KT-0805Y
Yellow LED
LED0_out
LED1_out
R206
1k
R208
1k
R_val=(3V3-2V2)/1mA
=1.1K
Battery
TP201
2.5mmx2.5mm
D205
B5817W
J202
J203
BH-AA-A5BJ012
Diode_In
BATT1
BATT2
J204
J205
TP202
2.5mmx2.5mm
BATT3
4x(1V-1V5)
= 4V - 6V
R205
100k
BATT_ADC1_C1_IO6
R207
100k
C207
1uF
Errata:
A physical switch for cutting power to board completely would have been helpful
Authour: Samuel Yow
Sheet: /[2] ESP32_MCU/
File: esp32_mcu.kicad_sch
Title: ESP32S3 Alarm Clock
Size: A4
Date:
Rev:
KiCad E.D.A. kicad 7.0.9
Id: 2/4

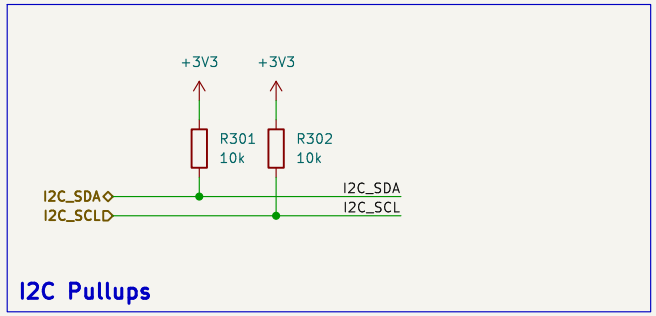

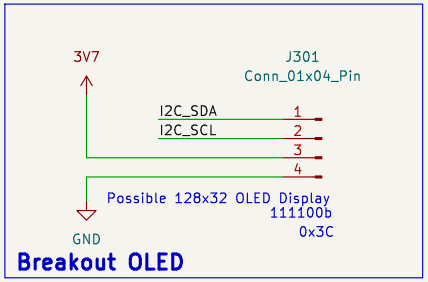

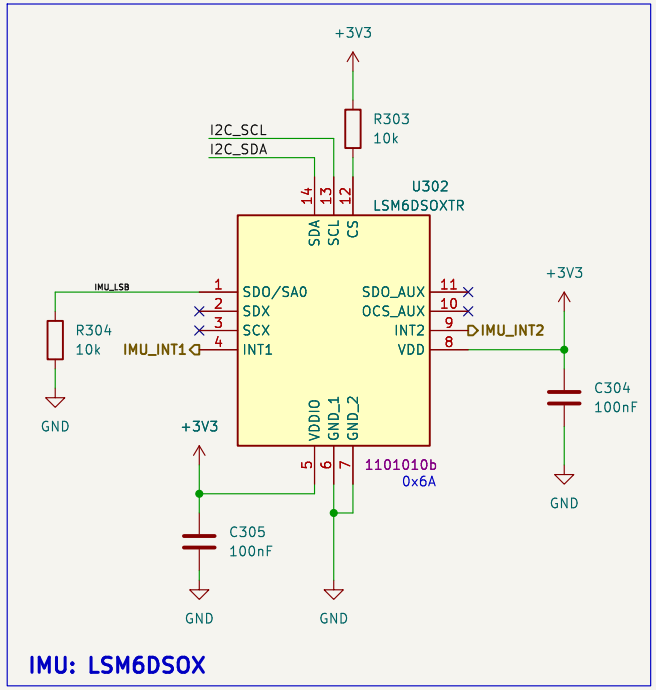

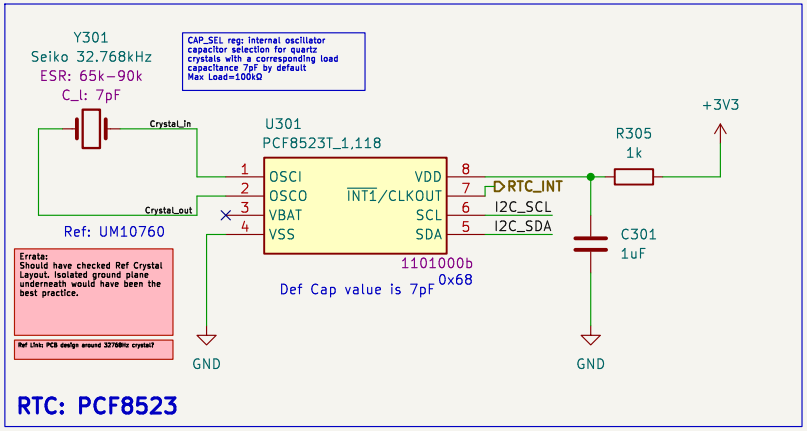

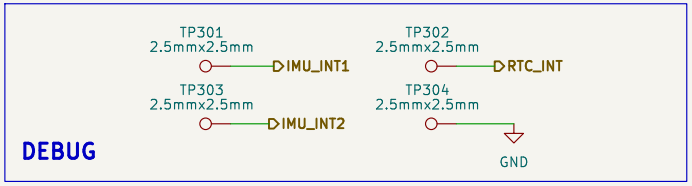

Authour: Samuel Yow

Sheet: /[4] I2C_Bus/

File: i2c_bus.kicad_sch

Title: ESP32S3 Alarm Clock

Size: A4	Date:	**Rev:**
KiCad E.D.A. kicad 7.0.9		Id: 3/4

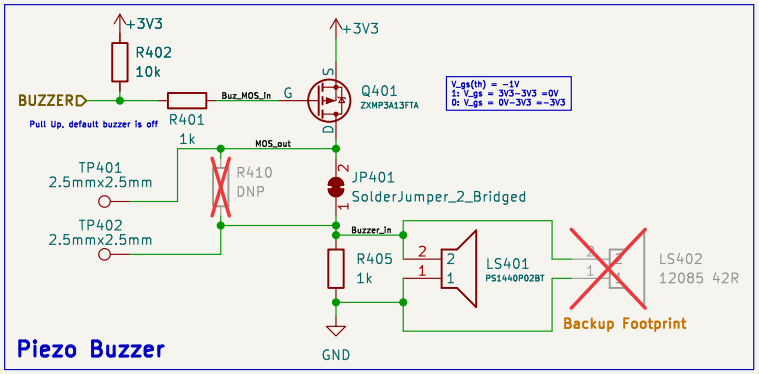

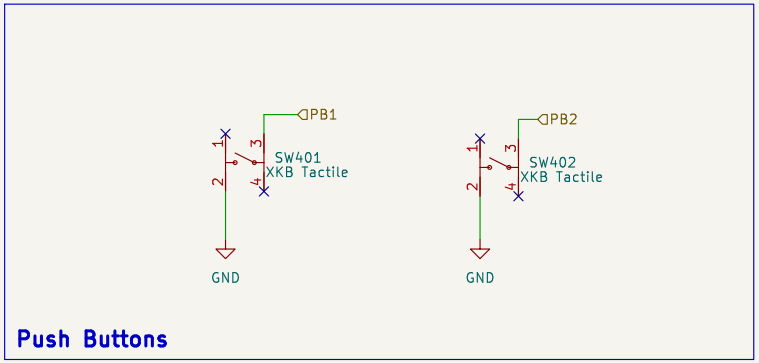

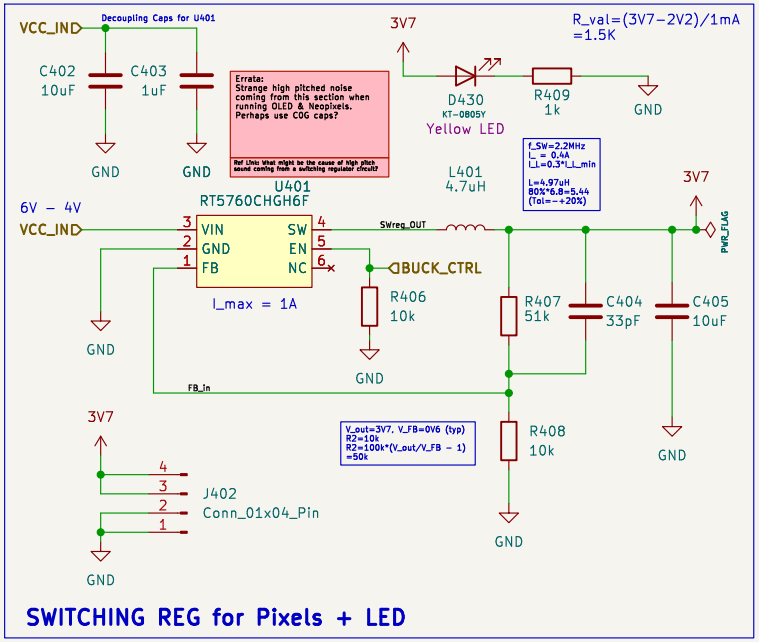

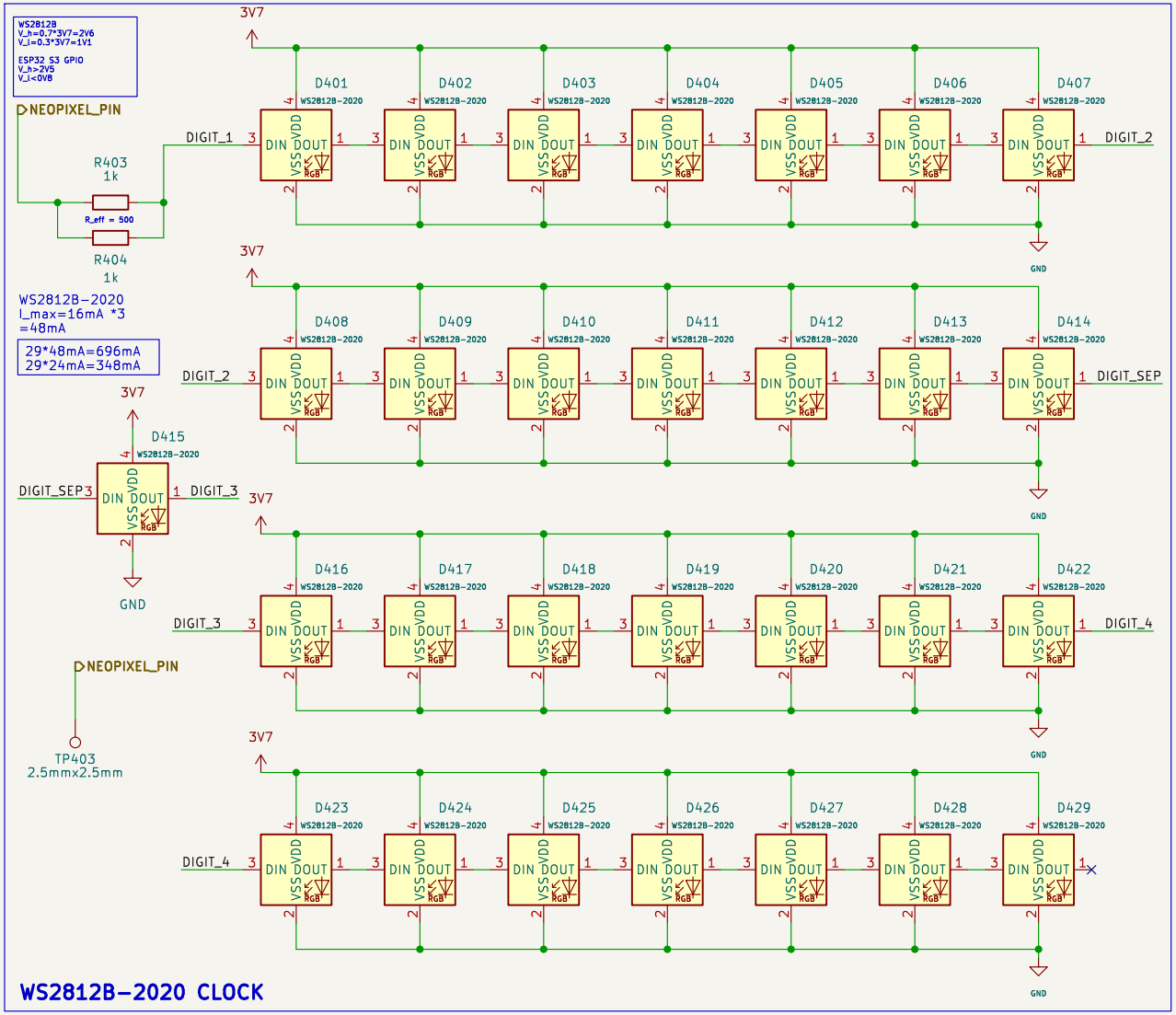

Authour: Samuel Yow

Sheet: /[3] Interactions/

File: Interactions.kicad_sch

Title: ESP32S3 Alarm Clock

Size: A4	Date:	Rev:
KiCad E.D.A. kicad 7.0.9		Id: 4/4