ITEM NO.	PART NUMBER	DESCRIPTION	QTY.
1	Front Axle Assembly		1
2	Frame 1 Front		1
3	rear axle assembly		1
4	Frame 1 Rear		1
5	Frame 2		1
6	ASME B18.8.2 - 0.1252x0.3125		4
7	IN-HHMS 0.25-20x0.5x0.5-N		4
8	0.25-Clevis Pin		1
9	micrometer		1
10	2022N161		1

SAMPLE FABRICATION/ASSEMBLY PROCESS

STOCK DESC/DIMS: SEE BOM

1. Weld the base of the head of the 0.25-Clevis Pin to the frame 1 rear
2. Insert the 2022N161_MIL. SPEC. compression spring concentric to the Clevis Pin
3. Insert the the tip of the Clevis Pin in frame 1 front
4. Weld the micrometer to both frame 1 rear and frame 2 front above the pin
5. Using ___ screws and ___ nuts attach both frame 1 front, frame 1 rear and frame 2 to the front axle assembly and to the rear axle assembly

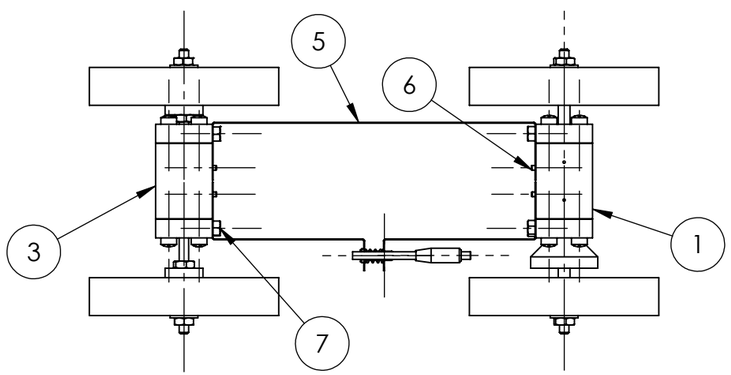

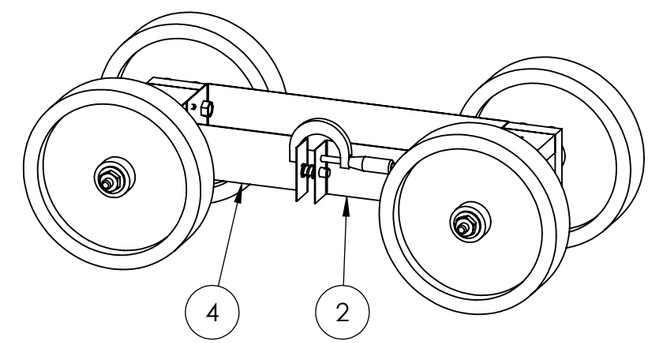

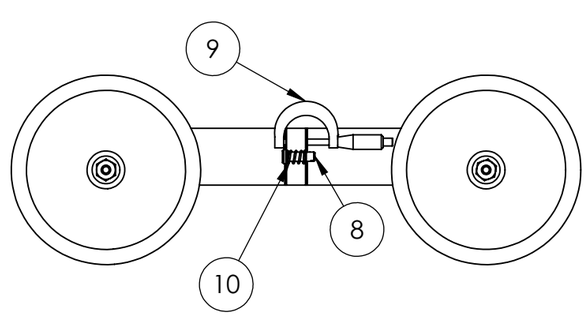

DRAWN BY	DATE
Giampietro Nigro	11/20/2019

APPROVALS:

AU EMAIL	SINGNATURE

STOCK VENDOR INFO: SEE PARTS LIST

UNLESS OTHERWISE SPECIFIED:
DIMENSIONS ARE IN INCHES
ANGLES ARE IN DEGREES
3rd Angle Projection

TOLERANCES:

ANGULAR	± 1°
FRACTIONAL	±1/8"
ONE PLACE DECIMAL	±0.1"
TWO PLACE DECIMAL	±0.05"
THREE PLACE DECIMAL	±0.005"

Careless Broncos

MATERIAL: SEE PARTS LIST

TITLE/DESC: Gravity Car Assembly

FILE NAME: Gravity car assembly (Split frame)

DWG. #: A-003 REV #:

SCALE: 1:4 SIZE **B** SHEET 1 OF 1

SOLIDWORKS Educational Product. For Instructional Use Only.