ITEM NO.	PART	Drawig Number	QTY.
1	Connection Front Suspention	P-002	1
2	Suspension Front	P-001	2
3	CR-FIMS 0.25-20x0.75x0.75-N		4
4	Slide Wing Nut	P-004	1
5	SL-BHMS 0.073-64x0.25x0.25-N		2
6	DIN 625 - 608 - 8,SI,NC,8_68		2
7	DIN 625 - 6202 - 10,SI,NC,10_68		1
8	Muffle Bearing	P-006	2
9	Threaded Axle Front Left	P-003	1
10	Adapter One-Way-Bearing	P-008	1
11	Muffle One-Way-Bearing	P-007	1
12	Threaded Axle Front Right	P-009	1
13	Muffle Wheel Right	P-011	1
14	Wheel	P-005	2
15	Muffle Wheel Left	P-010	1
16	Regular FW 0.25		2
17	HHJNUT 0.2500-20-D-N		4
18	Wingnut	P-012	1

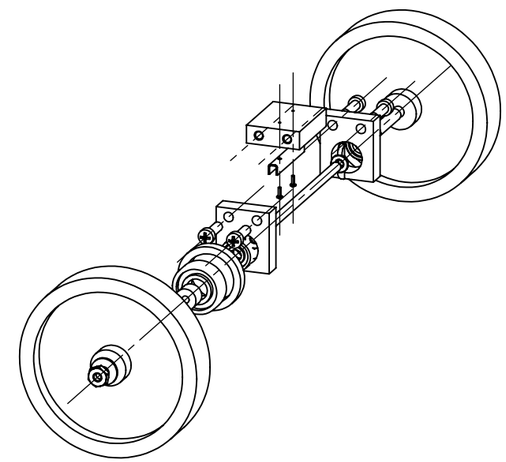

SAMPLE FABRICATION/ASSEMBLY PROCESS

STOCK DESC/DIMS | SEE BOM

1. screw togehter Connection Front Suspension(1) and Suspention Front(2) using screws(3)
2. push in bearings (7)
3. screw in Slide Wing Nut(4) with screws(5)
4. push in Muffle Bearing(8) in bearings(7)
5. put Wingnut(18) and nuts(17) on (9) while putting Threaded Axle Front Left throught Muffle Bearing(8)
6. put Wheel(14) on Muffle Wheel Left(15), put them on Threaded Axle Front Left(9) and fix them in place with nut(17) and washer(16)
7. screw Adapter One-Way-Bearing on the right side of the Threaded Axle Front Left, and push One-Way-Bearing(7) in
8. push in Muffle One-Way-Bearing(13) in One-Way-Bearing(7) and screw Threaded Axle Front Right(12) in
9. push Wheel(14) on muffle Wheel Right(13), glue it together and screw it on Threaded Axle Front Right(12)
10. fix Wheel(14) in place with with nut(17) and washer(16)

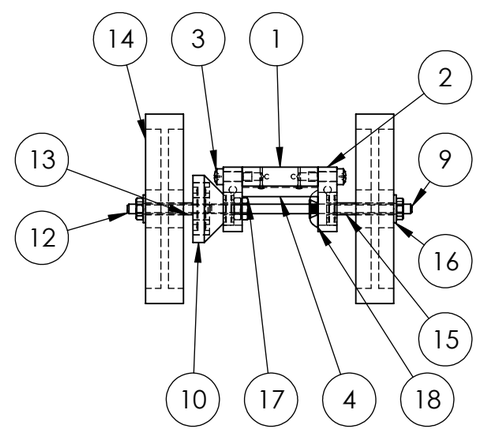

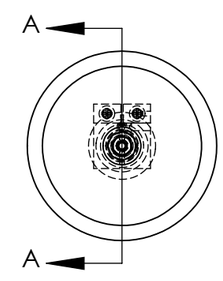

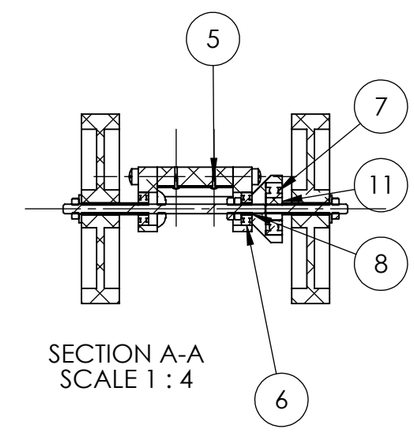

SECTION A-A
SCALE 1 : 4

DRAWN BY	DATE
Felix Lasch	11/18/2019
APPROVALS:	
AU EMAIL	SINGNATURE

STOCK VENDOR INFO: SEE PARTS LIST

UNLESS OTHERWISE SPECIFIED:
DIMENSIONS ARE IN INCHES
ANGLES ARE IN DEGREES
3rd Angle Projection

TOLERANCES:

ANGULAR	± 1°
FRACTIONAL	±1/8"
ONE PLACE DECIMAL	±0.1"
TWO PLACE DECIMAL	±0.05"
THREE PLACE DECIMAL	±0.005"

Careless Broncos

MATERIAL: SEE PARTS LIST

TITLE/DESC: Fromt Axle Assembly

FILE NAME: Front Axle Assembly

DWG. #: A-001 REV #:

SCALE: 1:4 SIZE **B** SHEET 1 OF 1

SOLIDWORKS Educational Product. For Instructional Use Only.