SAMPLE FABRICATION/ASSEMBLY PROCESS	
STOCK DESC/DIMS	12 in. x 24 in. Leathergrain Aluminum Sheet in Silver

1. Cut a strip of material from the sheet of proper dimensions with a band saw
2. Drill the holes using a power drill
3. Sand the edges using silicon carbide sandpaper
4. Bend the strip, by using the procedure of heat bending, according to the given tollerances

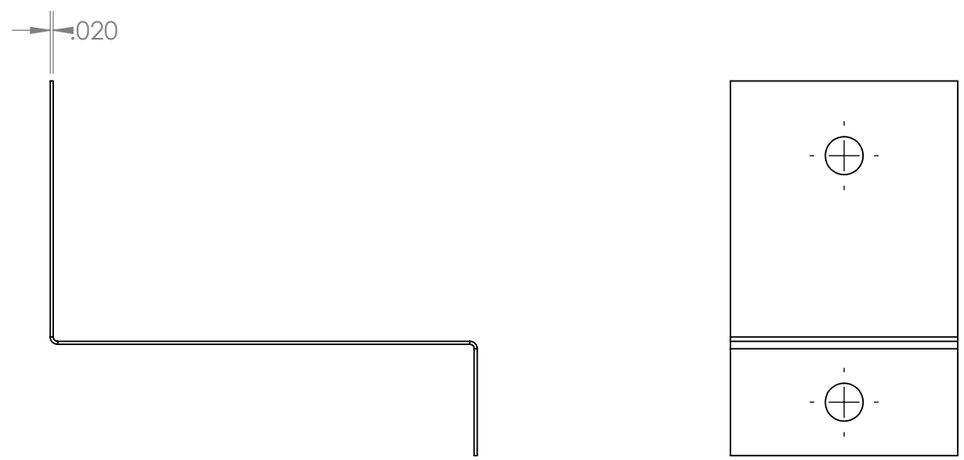

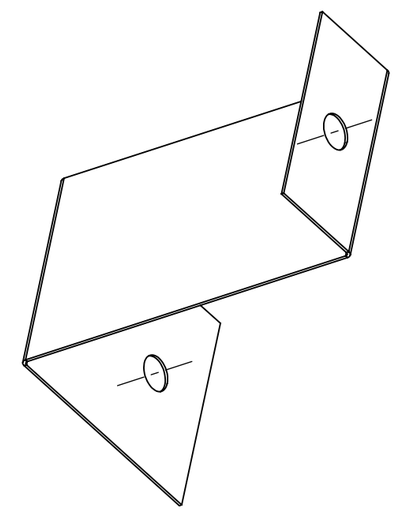

1:1 Reference
Just for scale

DRAWN BY	DATE
Giampietro Nigro	11/11/2019
APPROVALS:	
AU EMAIL	SINGNATURE

STOCK VENDOR INFO: 12 in. x 24 in. Leathergrain Aluminum Sheet in Silver

UNLESS OTHERWISE SPECIFIED:
DIMENSIONS ARE IN INCHES
ANGLES ARE IN DEGREES
3rd Angle Projection

TOLERANCES:

ANGULAR	± 1°
FRACTIONAL	±1/8"
ONE PLACE DECIMAL	±0.1"
TWO PLACE DECIMAL	±0.05"
THREE PLACE DECIMAL	±0.005"

Careless Broncos

MATERIAL: Leathergrain Aluminum Sheet in Silver

TITLE/DESC: Split frame 1

FILE NAME: Frame 1

DWG. #: P-001 REV #: B

SCALE: 1:1 SIZE **B** SHEET 1 OF 1

SOLIDWORKS Educational Product. For Instructional Use Only.