SAMPLE FABRICATION/ASSEMBLY PROCESS	
STOCK DESC/DIMS	muffle fron axle

1. print muffle with 3D-printer
2. recut 4/20 thread with tap cutter

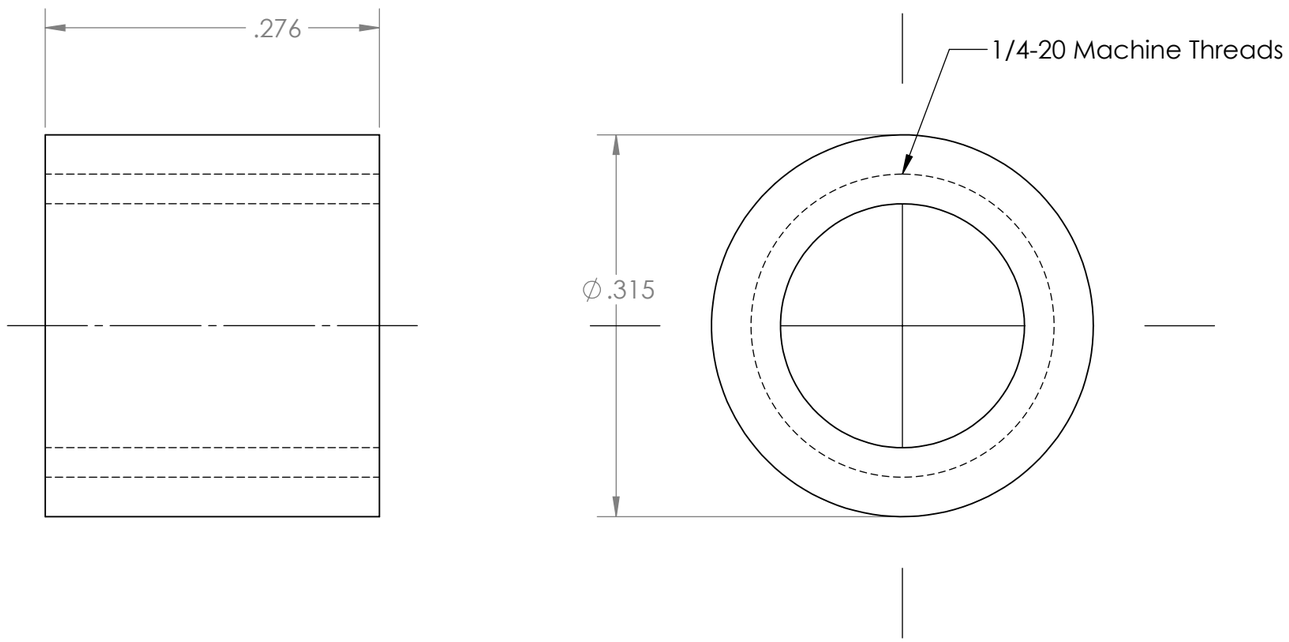

DRAWN BY	DATE
Felix Lasch	11/11/2019
APPROVALS:	
AU EMAIL	SINGNATURE

UNLESS OTHERWISE SPECIFIED:
DIMENSIONS ARE IN INCHES
ANGLES ARE IN DEGREES
3rd Angle Projection

TOLERANCES:

ANGULAR	± 1°
FRACTIONAL	±1/8"
ONE PLACE DECIMAL	±0.1"
TWO PLACE DECIMAL	±0.05"
THREE PLACE DECIMAL	±0.005"

STOCK VENDOR INFO:

Careless Broncos

MATERIAL:	ABS
TITLE/DESC:	Muffle Bearing
FILE NAME:	muffle bearing
DWG. #:	P-006
REV #:	
SCALE: 8:1	SIZE **B**
SHEET 1 OF 1	

SOLIDWORKS Educational Product. For Instructional Use Only.