SAMPLE FABRICATION/ASSEMBLY PROCESS	
STOCK DESC/DIMS	Adapter One-Way-Bearing

1. print adapter with 3D-Printer
2. recut 1/4-28 thread with tap cutter

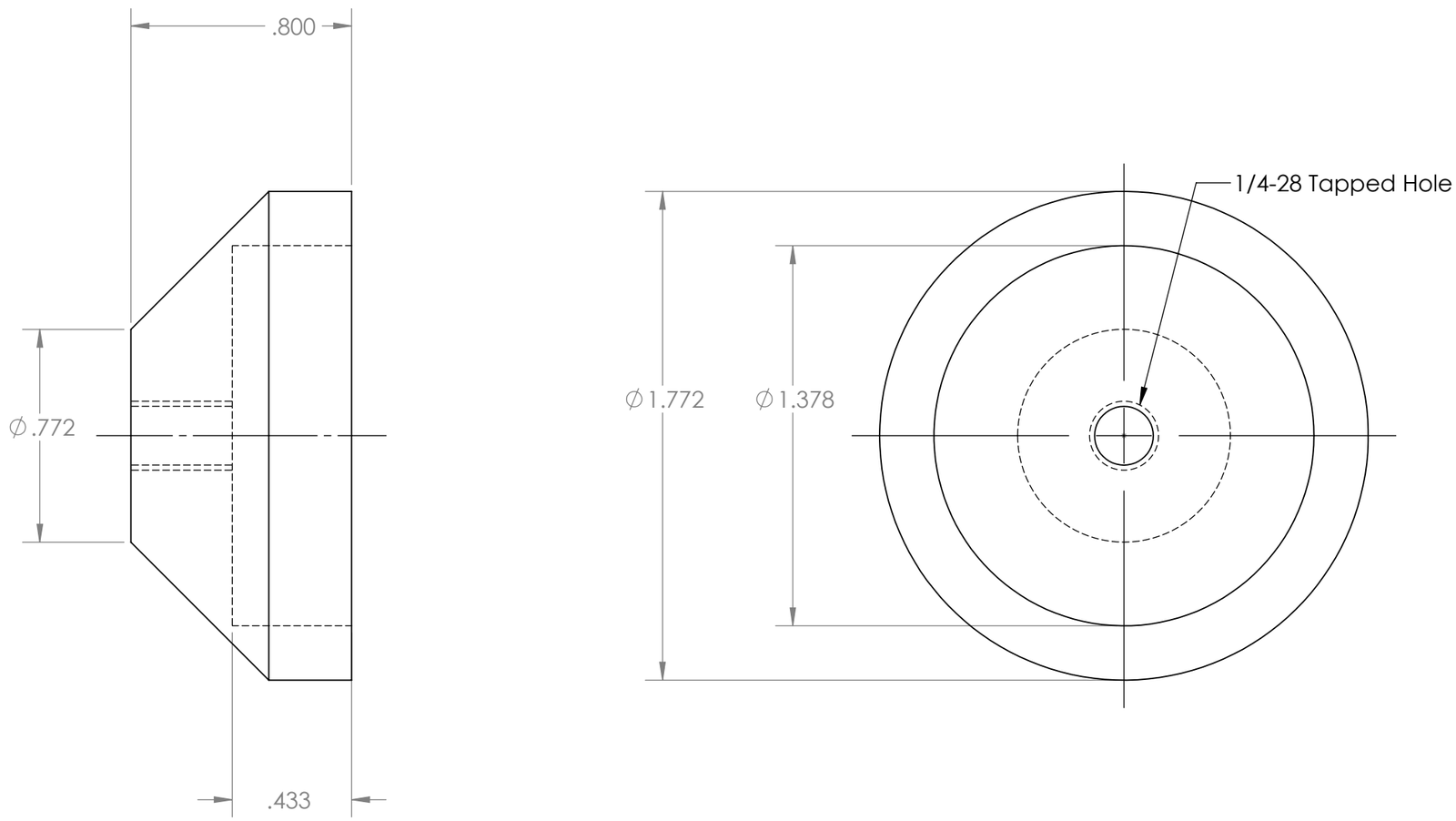

DRAWN BY	DATE
Felix Lasch	11/17/2019
APPROVALS:	
AU EMAIL	SINGNATURE

STOCK VENDOR INFO:

UNLESS OTHERWISE SPECIFIED:
DIMENSIONS ARE IN INCHES
ANGLES ARE IN DEGREES
3rd Angle Projection

TOLERANCES:

ANGULAR	± 1°
FRACTIONAL	±1/8"
ONE PLACE DECIMAL	±0.1"
TWO PLACE DECIMAL	±0.05"
THREE PLACE DECIMAL	±0.005"

Careless Broncos

MATERIAL:	ABS	
TITLE/DESC:	Adapter One-Way-Bearing	
FILE NAME:	Adapter One-Way-Bearing	
DWG. #:	P-008	REV #:
SCALE: 2:1	SIZE B	SHEET 1 OF 1

SOLIDWORKS Educational Product. For Instructional Use Only.