SAMPLE FABRICATION/ASSEMBLY PROCESS	
STOCK DESC/DIMS	Low-Carbon Steel Rod 1" Diameter

1. Off the 1' steel rod, cut two parts 1.5" each for both muffles
2. Lathe one end down to given dimensions.
3. Drill and tap 1/4-20" holes in the center of both rods.

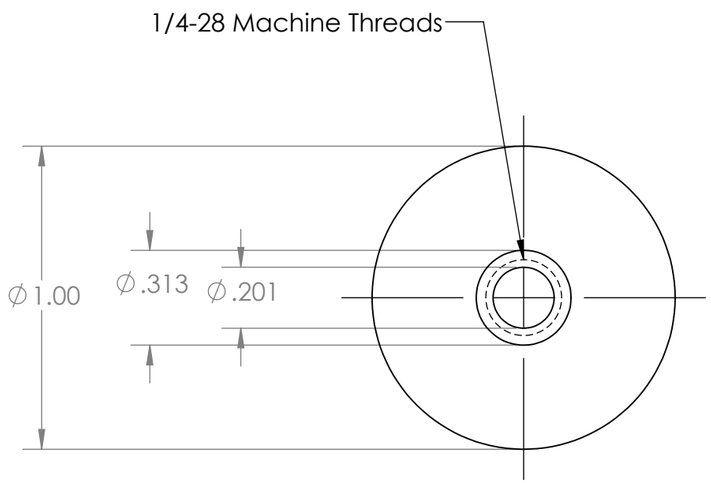

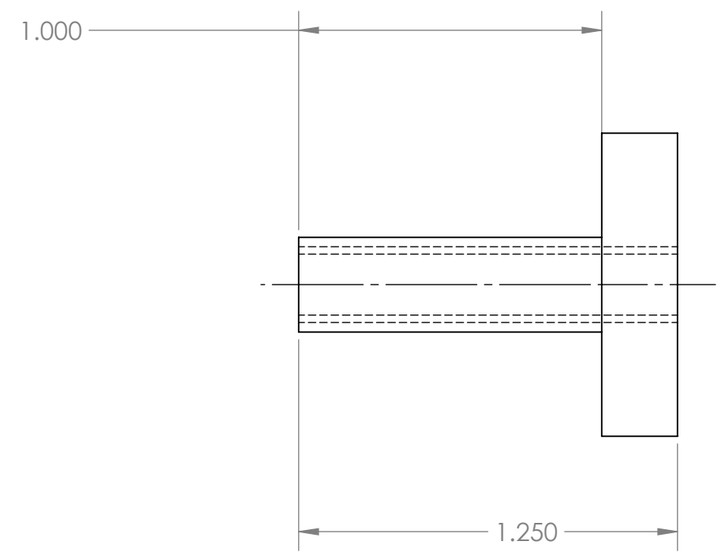

DRAWN BY	DATE
Aditya Patwardhan	12/5/2019
APPROVALS:	
AU EMAIL	SINGNATURE

UNLESS OTHERWISE SPECIFIED:
DIMENSIONS ARE IN INCHES
ANGLES ARE IN DEGREES
3rd Angle Projection

TOLERANCES:

ANGULAR	± 1°
FRACTIONAL	±1/8"
ONE PLACE DECIMAL	±0.1"
TWO PLACE DECIMAL	±0.05"
THREE PLACE DECIMAL	±0.005"

STOCK VENDOR INFO:

Careless Broncos

MATERIAL:	AISI 1020		
TITLE/DESC:	Muffle		
FILE NAME:	muffle rear wheels		
DWG. #:	P-022	REV #: A	
SCALE: 2:1	SIZE B	SHEET 1 OF 1	

SOLIDWORKS Educational Product. For Instructional Use Only.