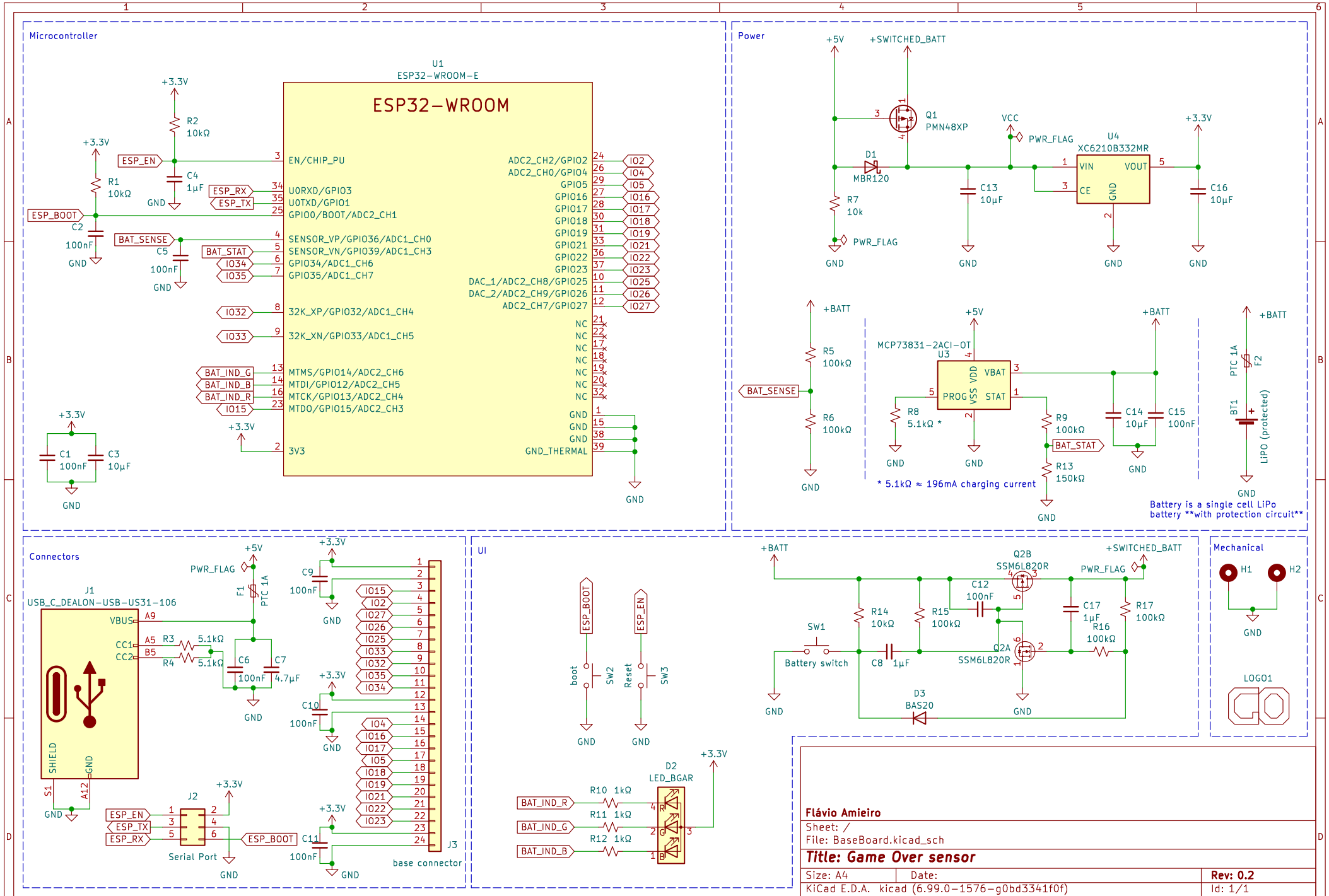
Microcontroller
U1
ESP32-WROOM-E
ESP32-WROOM
EN/CHIP_PU
U0RXD/GPIO3
U0TXD/GPIO1
GPIO0/BOOT/ADC2_CH1
SENSOR_VP/GPIO36/ADC1_CH0
SENSOR_VN/GPIO39/ADC1_CH3
GPIO34/ADC1_CH6
GPIO35/ADC1_CH7
32K_XP/GPIO32/ADC1_CH4
32K_XN/GPIO33/ADC1_CH5
MTMS/GPIO14/ADC2_CH6
MTDI/GPIO12/ADC2_CH5
MTCK/GPIO13/ADC2_CH4
MTDO/GPIO15/ADC2_CH3
3V3
ADC2_CH2/GPIO2
ADC2_CH0/GPIO4
GPIO5
GPIO16
GPIO17
GPIO18
GPIO19
GPIO21
GPIO22
GPIO23
DAC_1/ADC2_CH8/GPIO25
DAC_2/ADC2_CH9/GPIO26
ADC2_CH7/GPIO27
GND_THERMAL
ESP_EN
ESP_RX
ESP_TX
ESP_BOOT
BAT_SENSE
BAT_STAT
BAT_IND_G
BAT_IND_B
BAT_IND_R
R1 10kΩ
R2 10kΩ
C1 100nF
C2 100nF
C3 10µF
C4 1µF
C5 100nF
Power
+5V
+SWITCHED_BATT
Q1 PMN48XP
D1 MBR120
R7 10k
PWR_FLAG
VCC
U4 XC6210B332MR
VIN
VOUT
CE
C13 10µF
C16 10µF
+3.3V
+BATT
R5 100kΩ
R6 100kΩ
MCP73831-2ACI-OT
U3
VDD
VBAT
PROG
VSS
STAT
R8 5.1kΩ *
R9 100kΩ
R13 150kΩ
C14 10µF
C15 100nF
* 5.1kΩ ≈ 196mA charging current
PTC 1A
F2
BT1
LiPo (protected)
Battery is a single cell LiPo battery **with protection circuit**
Connectors
J1
USB_C_DEALON-USB-US31-106
VBUS
CC1
CC2
SHIELD
GND
R3 5.1kΩ
R4 5.1kΩ
C6 100nF
C7 4.7µF
F1 PTC 1A
C9 100nF
C10 100nF
C11 100nF
J2
Serial Port
J3
base connector
UI
ESP_BOOT
ESP_EN
boot
SW2
Reset
SW3
D2 LED_BGAR
R10 1kΩ
R11 1kΩ
R12 1kΩ
Q2B SSM6L820R
Q2A SSM6L820R
C12 100nF
C17 1µF
R14 10kΩ
R15 100kΩ
R16 100kΩ
R17 100kΩ
C8 1µF
SW1
Battery switch
D3 BAS20
Mechanical
H1
H2
LOGO1
Flávio Amieiro
Sheet: /
File: BaseBoard.kicad_sch
Title: Game Over sensor
Size: A4
Date:
Rev: 0.2
KiCad E.D.A. kicad (6.99.0-1576-g0bd3341f0f)
Id: 1/1