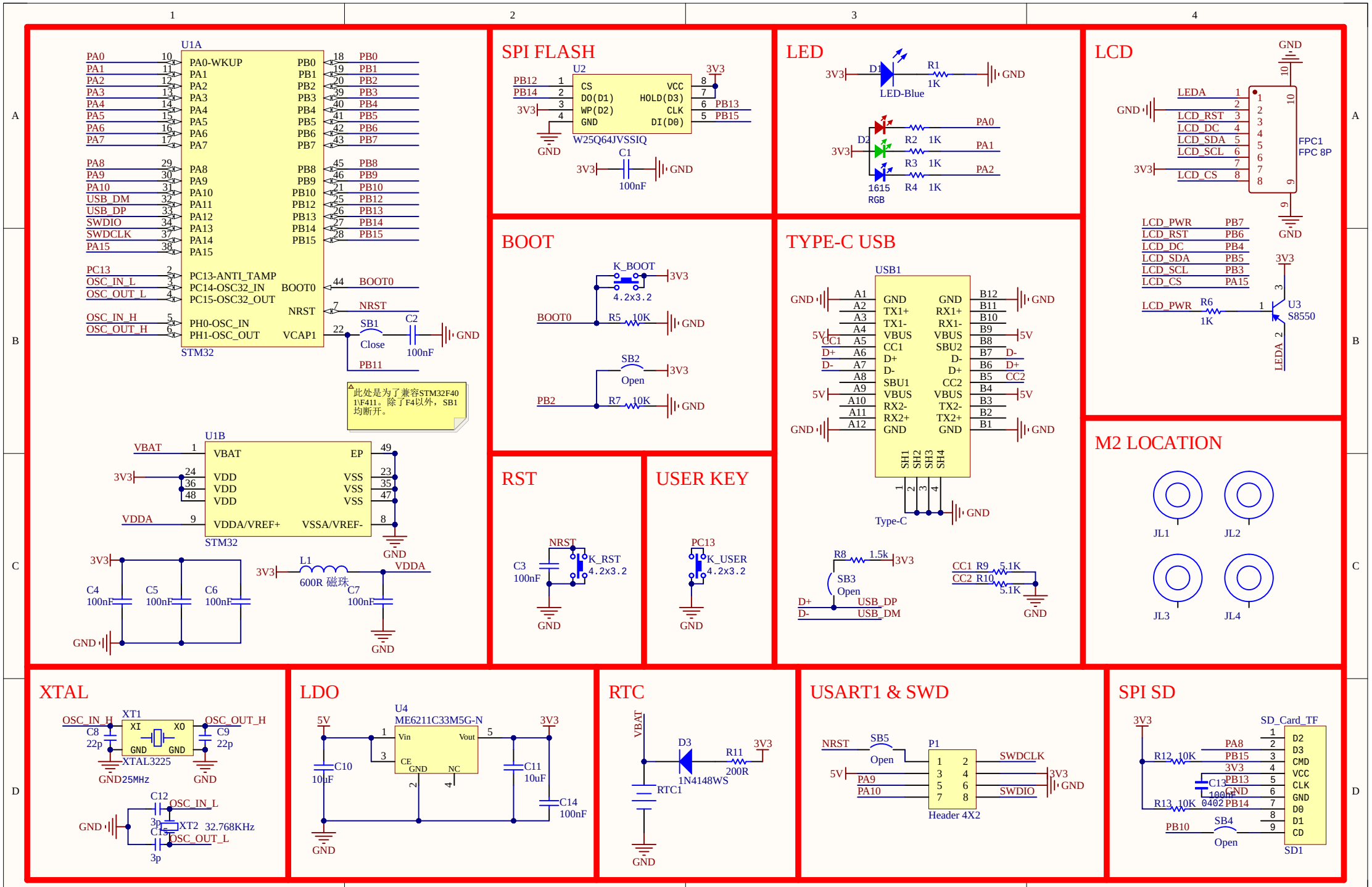
U1A
STM32
PA0-WKUP
PA1
PA2
PA3
PA4
PA5
PA6
PA7
PA8
PA9
PA10
PA11
PA12
PA13
PA14
PA15
PC13-ANTI_TAMP
PC14-OSC32_IN
PC15-OSC32_OUT
PH0-OSC_IN
PH1-OSC_OUT
PB0
PB1
PB2
PB3
PB4
PB5
PB6
PB7
PB8
PB9
PB10
PB12
PB13
PB14
PB15
BOOT0
NRST
VCAP1
USB_DM
USB_DP
SWDIO
SWDCLK
OSC_IN_L
OSC_OUT_L
OSC_IN_H
OSC_OUT_H
SB1
Close
C2
100nF
此处是为了兼容STM32F401\F411。除了F4以外，SB1均断开。
U1B
VBAT
VDD
VDDA
VDDA/VREF+
VSSA/VREF-
VSS
EP
L1
600R 磁珠
C4
C5
C6
C7
SPI FLASH
U2
CS
DO(D1)
WP(D2)
GND
VCC
HOLD(D3)
CLK
DI(D0)
W25Q64JVSSIQ
C1
100nF
LED
D1
LED-Blue
R1
1K
D2
R2
R3
R4
1615
RGB
BOOT
K_BOOT
4.2x3.2
R5
10K
SB2
Open
R7
RST
C3
K_RST
USER KEY
PC13
K_USER
LCD
LEDA
LCD_RST
LCD_DC
LCD_SDA
LCD_SCL
LCD_CS
FPC1
FPC 8P
LCD_PWR
R6
U3
S8550
TYPE-C USB
USB1
Type-C
SH1
SH2
SH3
SH4
R8
1.5k
SB3
CC1
CC2
R9
R10
5.1K
M2 LOCATION
JL1
JL2
JL3
JL4
XTAL
XT1
XI
XO
XTAL3225
C8
22p
C9
22p
C12
C14
XT2
32.768KHz
3p
LDO
U4
ME6211C33M5G-N
Vin
Vout
CE
NC
C10
10uF
C11
10uF
C14
100nF
RTC
VBAT
D3
1N4148WS
R11
200R
RTC1
USART1 & SWD
NRST
SB5
Open
P1
Header 4X2
SWDCLK
SWDIO
PA9
PA10
SPI SD
SD_Card_TF
SD1
D2
D3
CMD
VCC
CLK
GND
D0
D1
CD
R12
10K
R13
C13
100nF
0402
SB4
PB10