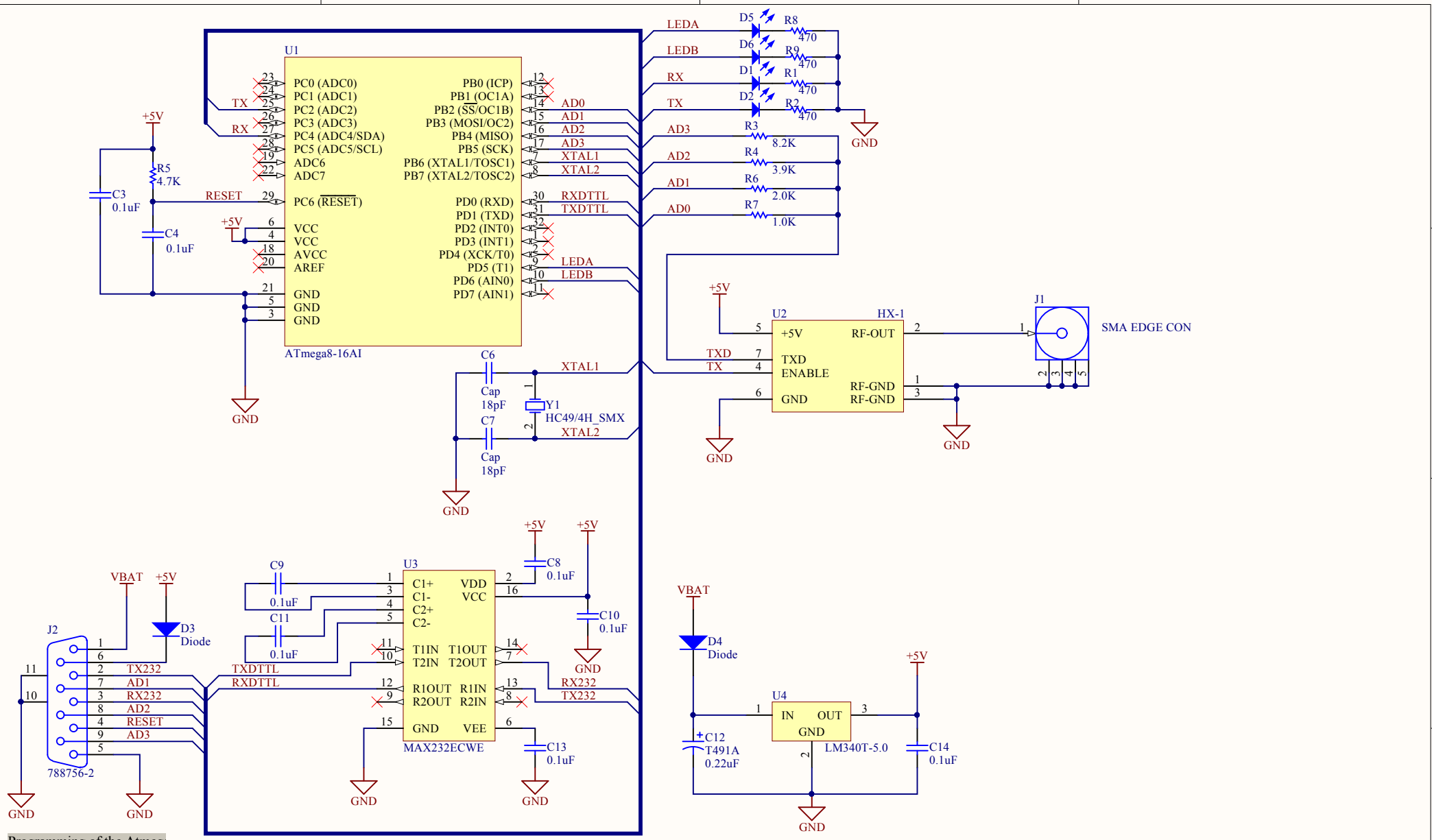

Programming of the Atmega

AD1 = MOSI
AD2 = MISO
AD3 = SCK
RESET = RESET

Title **Almtracker one**		
Size A4	Number	Revision 1.2
Date: 2015-05-08		Sheet of
File: C:\Projects\..\top.SchDoc		Drawn By: