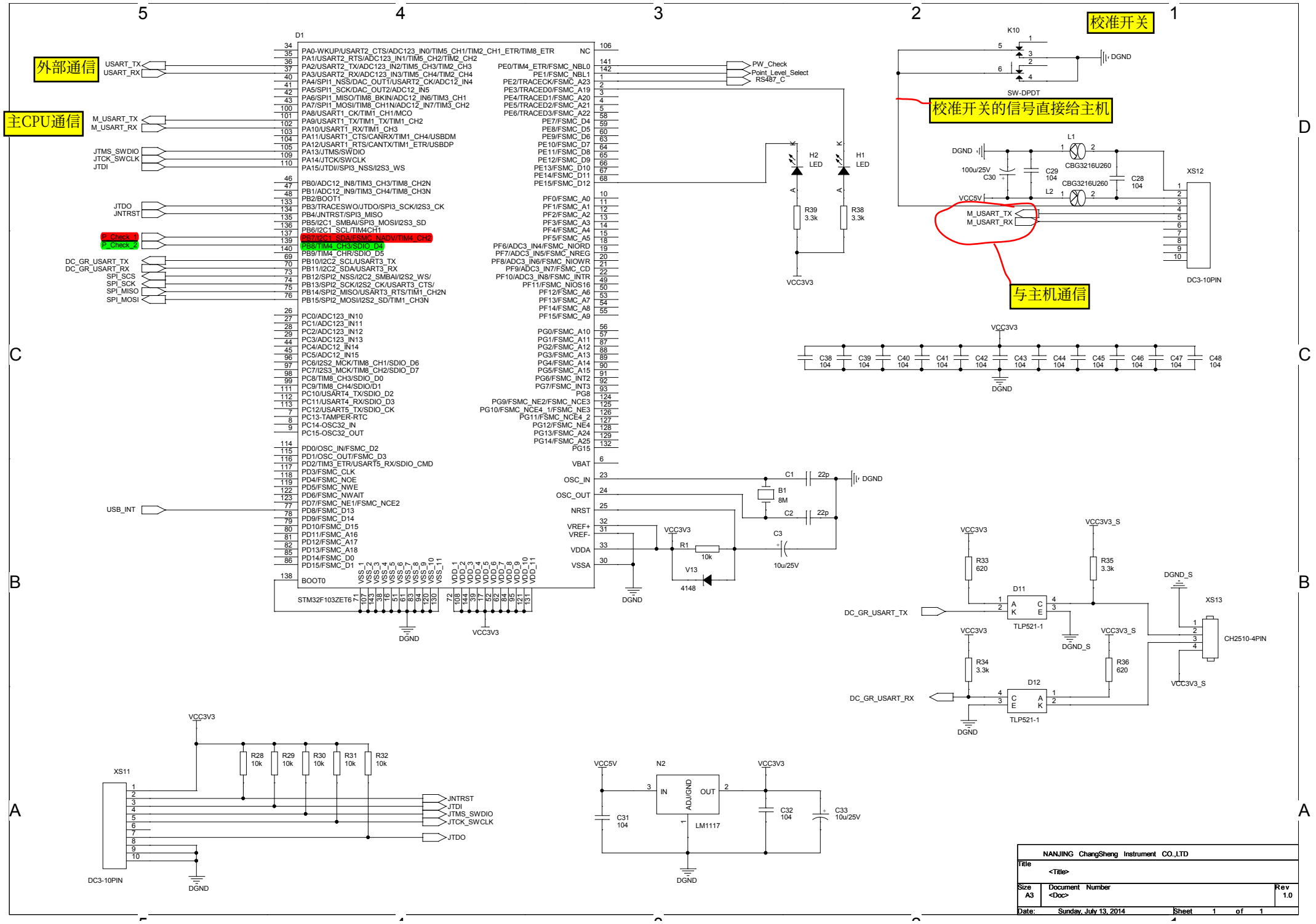
外部通信
主CPU通信
校准开关
校准开关的信号直接给主机
与主机通信
D1
STM32F103ZET6
K10
SW-DPDT
XS12
DC3-10PIN
XS13
CH2510-4PIN
XS11
DC3-10PIN
N2
LM1117
D11
D12
TLP521-1
H1 LED
H2 LED
VCC3V3
VCC5V
DGND
DGND_S
VCC3V3_S
USART_TX
USART_RX
M_USART_TX
M_USART_RX
JTMS_SWDIO
JTCK_SWCLK
JTDI
JTDO
JNTRST
P_Check_1
P_Check_2
DC_GR_USART_TX
DC_GR_USART_RX
SPI_SCS
SPI_SCK
SPI_MISO
SPI_MOSI
USB_INT
PW_Check
Point_Level_Select
RS487_C
OSC_IN
OSC_OUT
NRST
VREF+
VREF-
VDDA
VSSA
VBAT
BOOT0
NC
Title
<Title>
NANJING ChangSheng Instrument CO.,LTD
Size A3
Document Number
<Doc>
Rev 1.0
Date: Sunday, July 13, 2014
Sheet 1 of 1

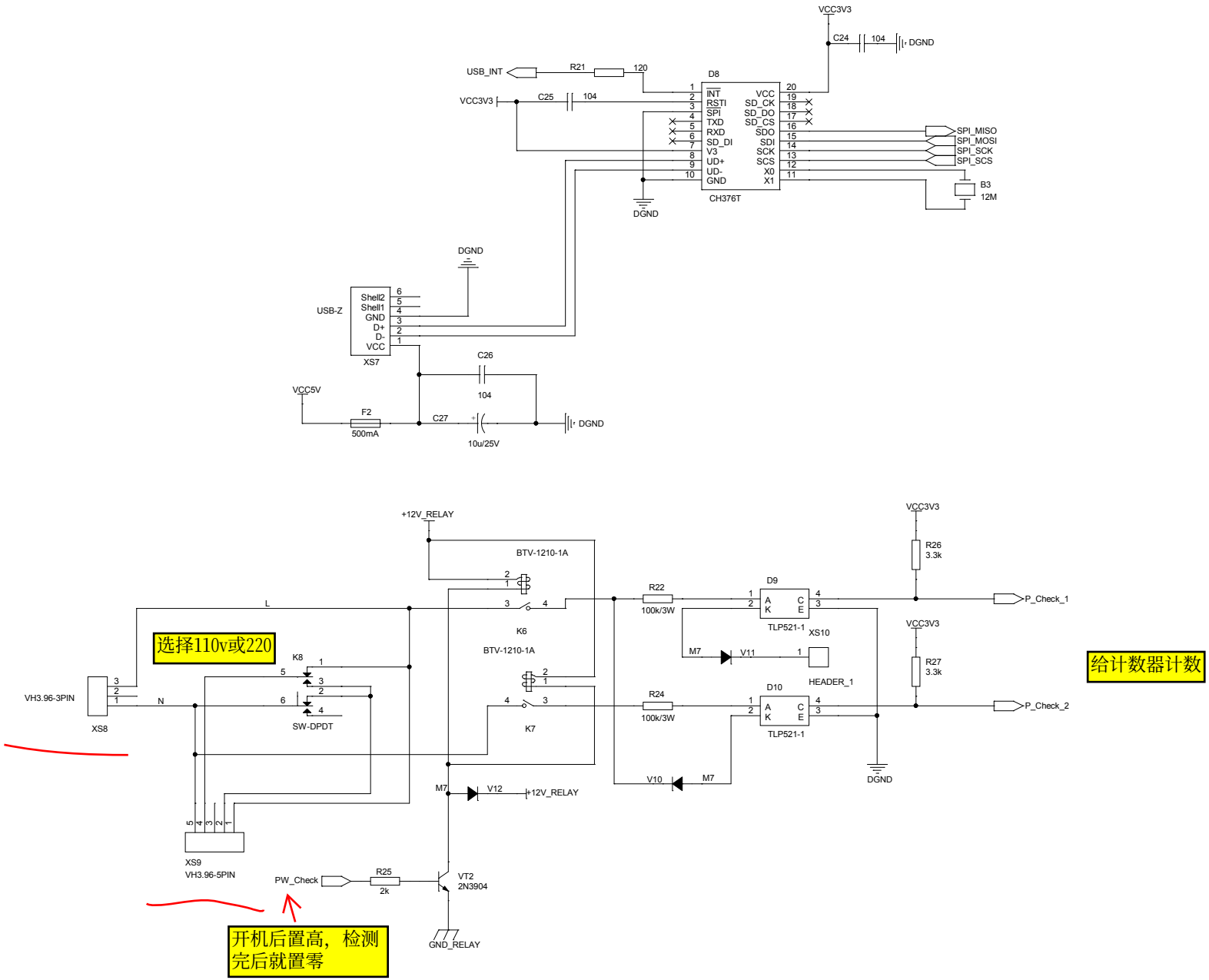

NANJING ChangSheng Instrument CO.,LTD		
Title <Title>		
Size A3	Document Number <Doc>	Rev 1.0
Date: Monday, July 14, 2014	Sheet 1 of 1	

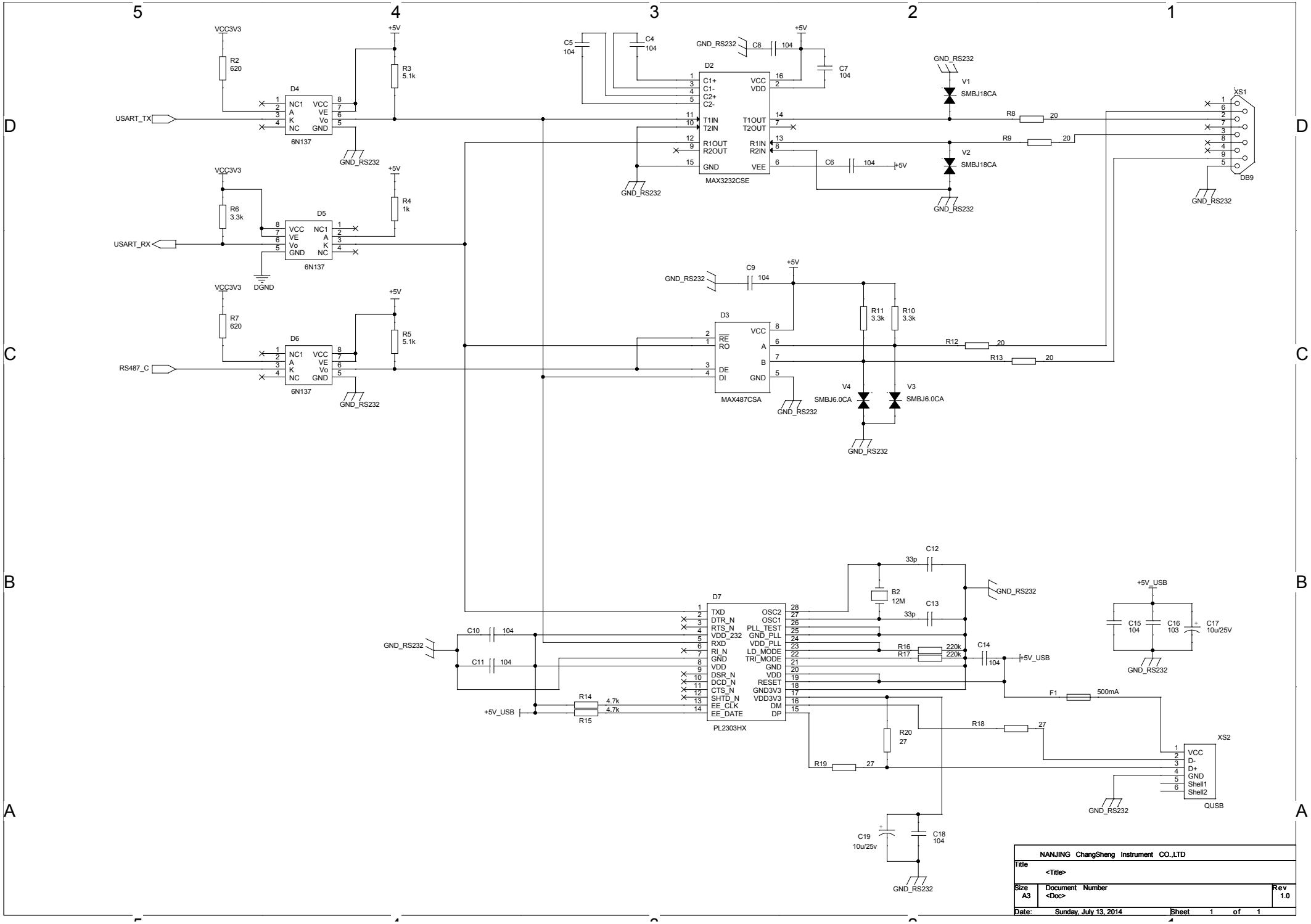

NANJING ChangSheng Instrument CO.,LTD		
Title <Title>		
Size A3	Document Number <Doc>	Rev 1.0
Date: Sunday, July 13, 2014	Sheet 1 of 1	

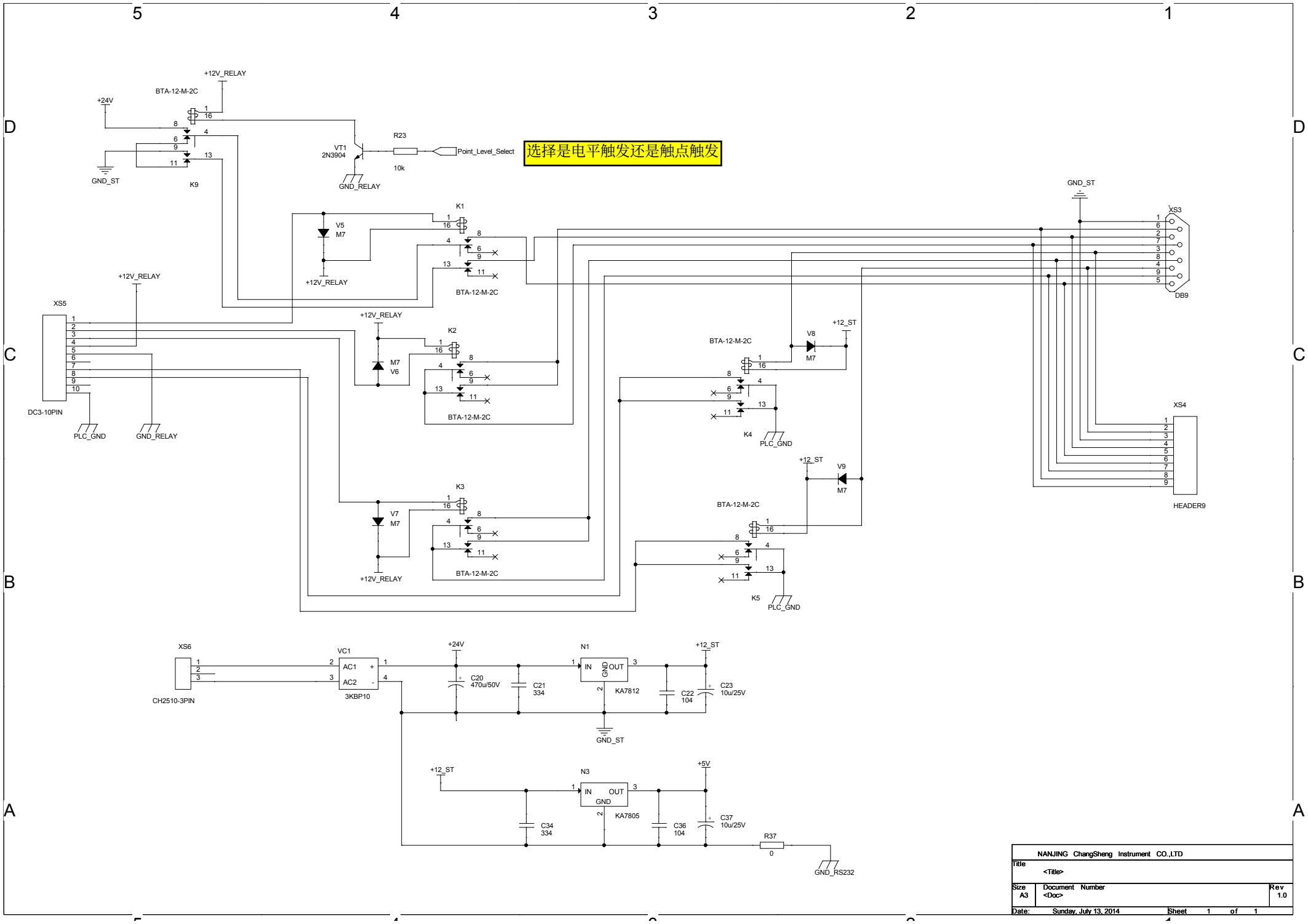
选择是电平触发还是触点触发
+12V_RELAY
BTA-12-M-2C
+24V
GND_ST
K9
VT1
2N3904
R23
10k
Point_Level_Select
GND_RELAY
K1
V5
M7
K2
M7
V6
K3
V7
M7
XS5
DC3-10PIN
PLC_GND
GND_RELAY
+12_ST
V8
V9
K4
K5
XS3
DB9
XS4
HEADER9
XS6
CH2510-3PIN
VC1
AC1
AC2
3KBP10
C20
470u/50V
C21
334
N1
IN
OUT
GND
KA7812
C22
104
C23
10u/25V
N3
KA7805
C34
334
C36
104
C37
10u/25V
+5V
R37
0
GND_RS232
NANJING ChangSheng Instrument CO.,LTD
Title
<Title>
Size
A3
Document Number
<Doc>
Rev
1.0
Date: Sunday, July 13, 2014
Sheet 1 of 1