REVISION	DESCRIPTION	DATE

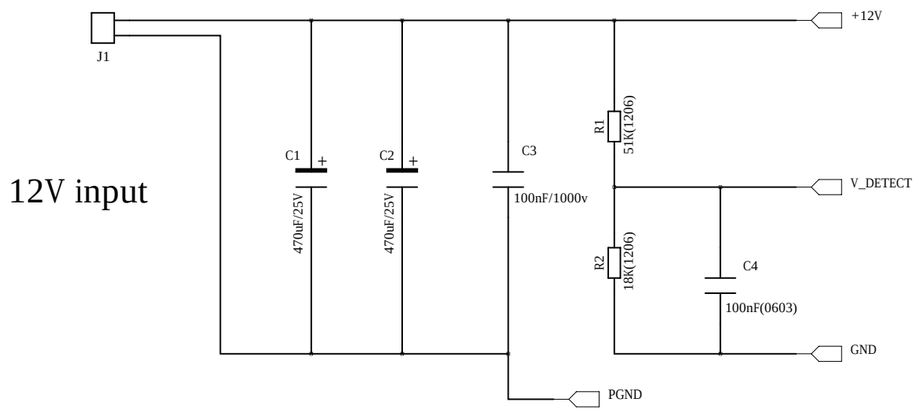

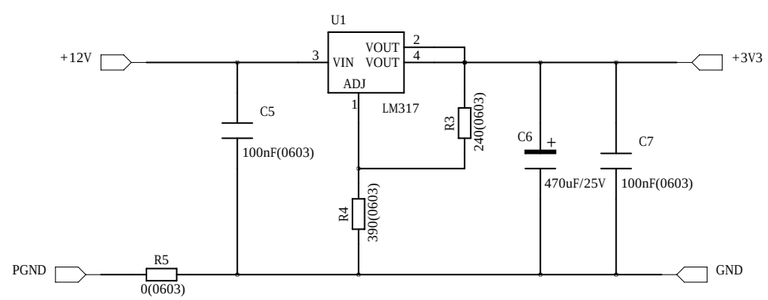

TITLE:	+12V__+3V3
DESIGNED	
CHECKED	
APPROVED	

Last Modified.: 2015-06-08 | 1 OF 5 | REVISION:

REVISION	DESCRIPTION	DATE

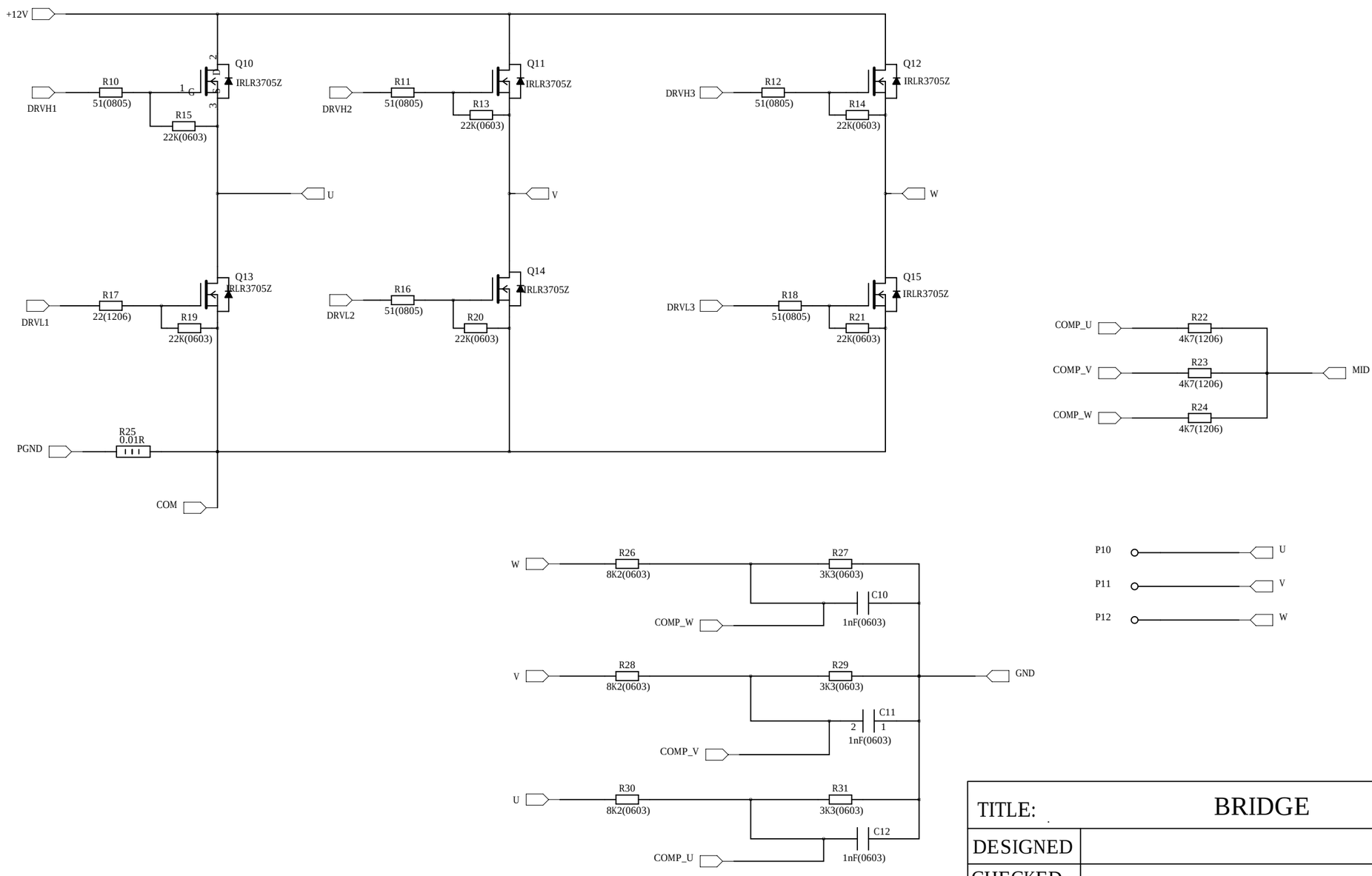

TITLE:	BRIDGE
DESIGNED	
CHECKED	
APPROVED	

Last Modified.: 2015-06-08 | 2 OF 5 | REVISION:

REVISION	DESCRIPTION	DATE

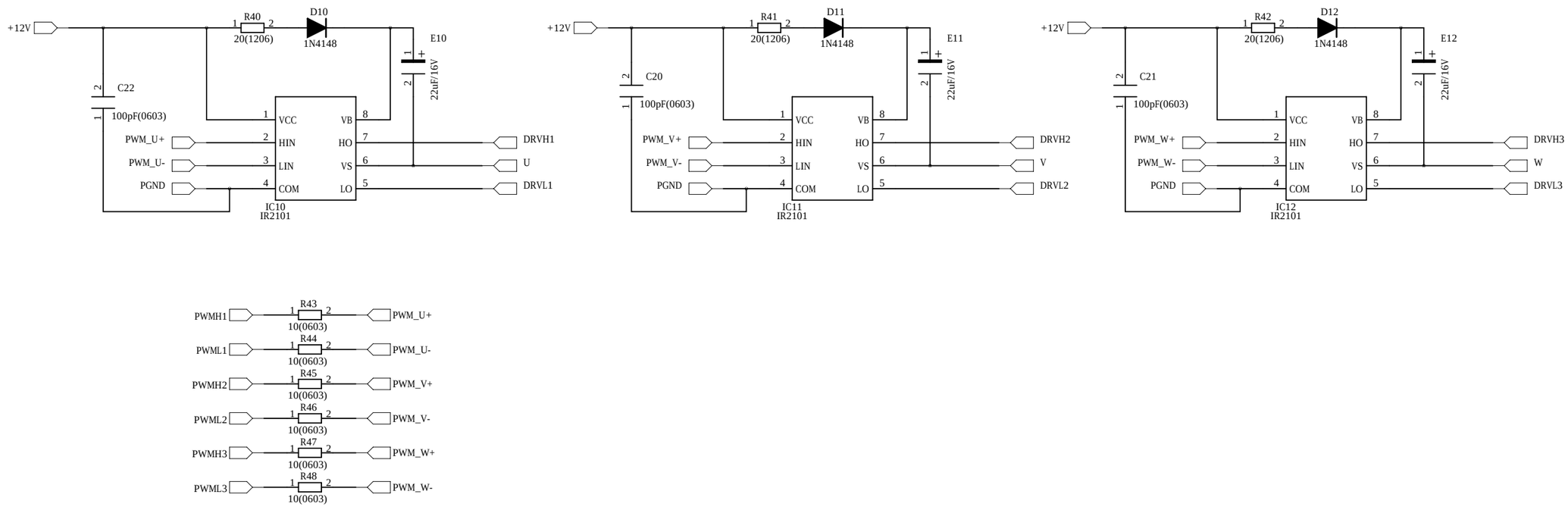

TITLE:	IR2101
DESIGNED	
CHECKED	
APPROVED	

Last Modified.: 2015-06-08

REVISION:

REVISION	DESCRIPTION	DATE

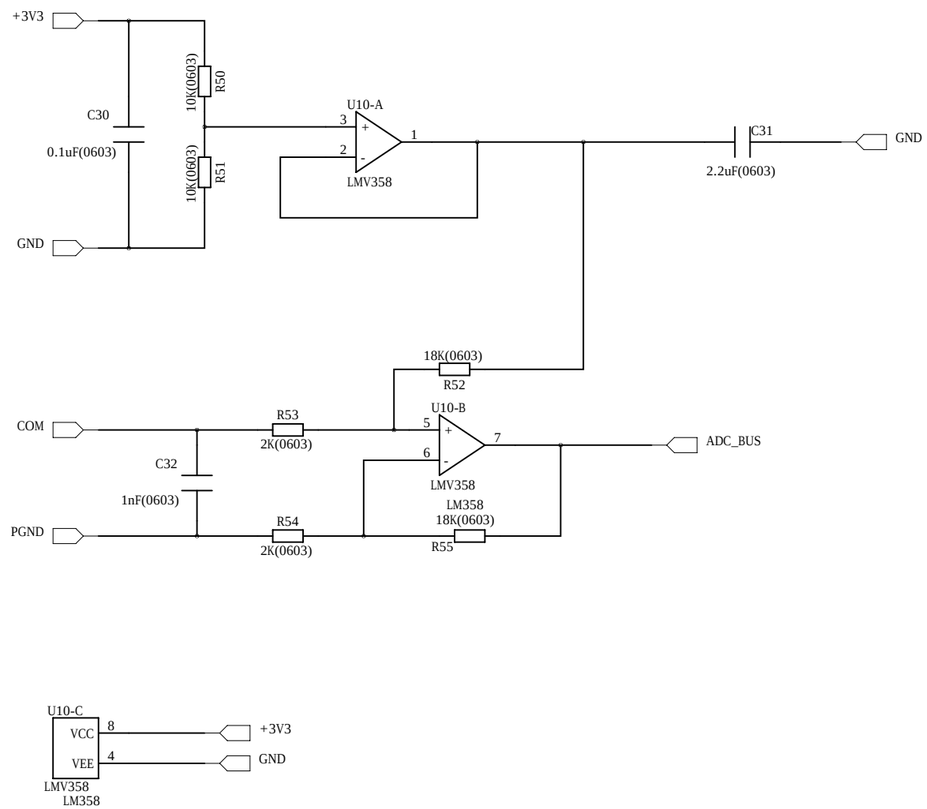

TITLE:	CURRENT_SAMPLE
DESIGNED	
CHECKED	
APPROVED	

Last Modified.: 2015-06-08 | 4 OF 5 | REVISION:

REVISION	DESCRIPTION	DATE

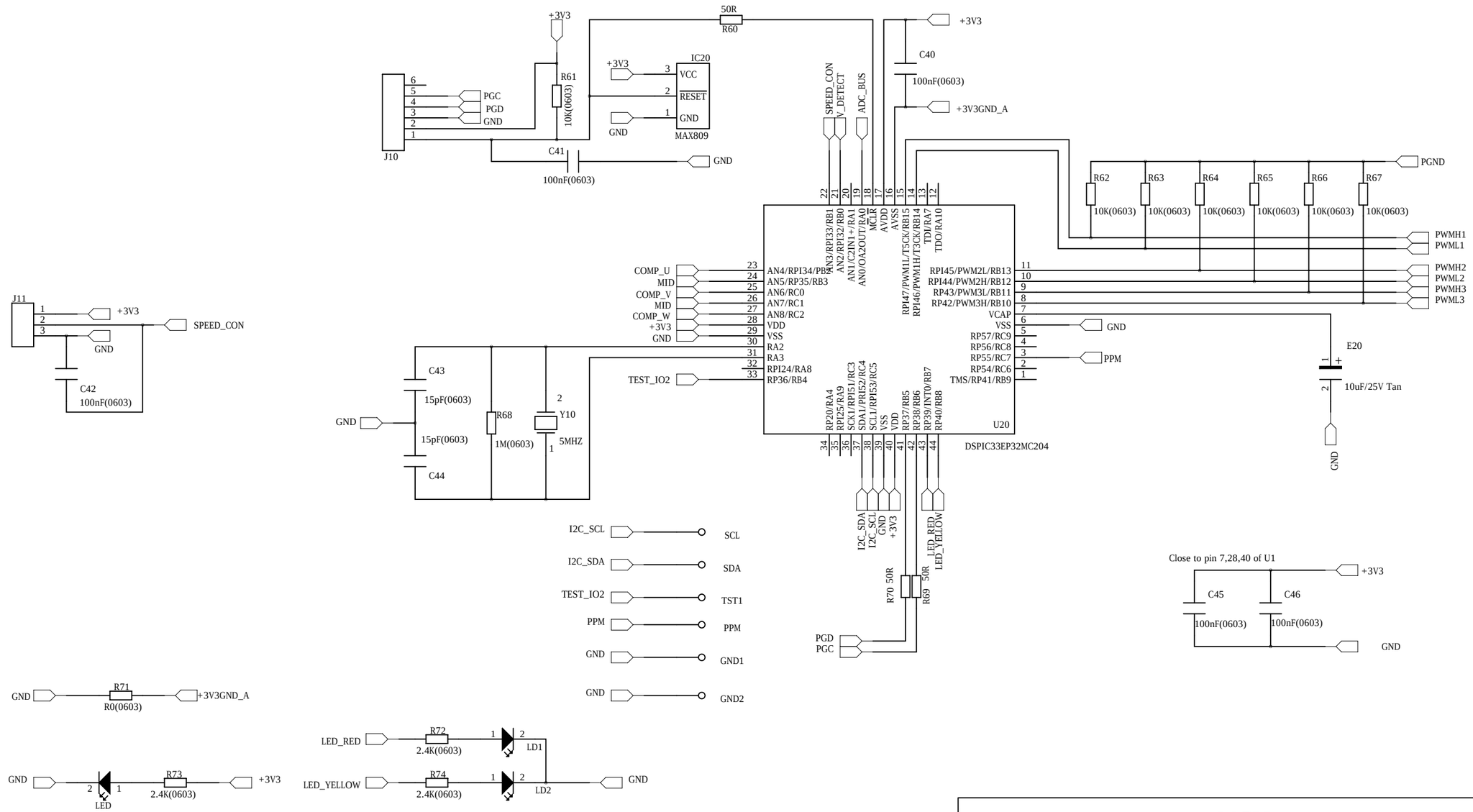

TITLE:	MCU
DESIGNED	
CHECKED	
APPROVED	

Last Modified.: 2015-06-08 | 5 OF 5 | REVISION: