JADARD

JD9853

Internal Command

JADARD confidential

Preliminary Version 0.05
2024/12/17

1. Revision History 5
2. JADARD COMMAND LIST 6
2.1. Jadard page 0 command 6
2.2. Jadard page 1 command 12
2.3. Jadard page 2 command 14
2.4. Jadard page 3 command 16
2.5. Jadard page 0 command Description 17
2.5.1. SEQUENCE CTRL: Power on sequence control (Page0 - B0h) 17
2.5.2. VCOM_SET: Set VCOM voltage for normal scan direction(Page0 - B2h) 20
2.5.3. GAMMA_SET: Set positive / negative voltage of Gamma power (Page0 - RB7h) 21
2.5.4. OTP_SET: Set internal OTP program related setting(Page0 - B8h) 22
2.5.5. POWER_CTRL2: Set power function related setting (Page0 - B9h) 24
2.5.6. POWER_STATE: Power status setting (Page0 - BAh) 25
2.5.7. DCDC_SEL: Power mode and charge pump related setting (Page0 - BBh) 26
2.5.8. VDDD_CTRL: Control logic voltage setting (Page0 - BCh) 29
2.5.9. SETRGBIF: (Page0 - BDh) 30
2.5.10. GAS_CTRL: GAS function control (Page0 - BEh) 31
2.5.11. SETSTBA: Set Source Output driving ability (Page0 - C0h) 32
2.5.12. SETPANEL: Set Panel relate register (Page0 - C1h) 33
2.5.13. SET_BIST: BIST Pattern setting (Page0 - C2h) 34
2.5.14. SETRGBCYC: Set Display Waveform Cycles of RGB Mode (Page0 - C3h) 35
2.5.15. SET TCON: Timing control setting (Page0 - C4h) 38
2.5.16. SET_R_GAMMA: Set Red Gamma output voltage(Page0 - C8h) 40
2.5.17. IF_OPTION: Interface Optiopn (Page0-CEh) 42
2.5.18. SET_GIP_L: SET CGOUTx_L Signal Mapping, GS_Panel=0 (Page0-D0h) 44
2.5.19. ABE_CTRL: (Page0-D3h) 45
2.5.20. OTP_REPAIR: (Page0-D6h) 46
2.5.21. RAMCTRL (Page0 - D7h) 47
2.5.22. AUTO_DISP_SETTING (Page0 - D8h) 48
2.5.23. OTP_PROG: OTP Program (Page0 - D9h) 49
2.5.24. SET_WD: Setup watch dog (Page0 - DDh) 50
2.5.25. SET_PAGE(Page0 - DEh) 51
2.5.26. SET_PASSWD: (Page0 - DFh) 51
2.5.27. SETECO: ECO used(Page0 - E6h) 51
2.5.28. GETIDVER: Get ID Version (Page0 - E7h) 52

2.5.29. UP_START_CTRL: Micro process control (Page0 - E8h) 53
2.5.30. SETID: Set ID (Page0 - E9h) 53
2.5.31. SELF_DIAG: UP debug used (Page0 - F0h) 53
2.5.32. SPI CMD: Set SPI command index (Page0 - F1h) 54
2.5.33. SPI DATA: Get SPI data (Page0 - F2h) 54
2.5.34. F5_CMD: Get standard command R44h value (Page0 - F5h) 54
2.5.35. UP_STATUS1: UP check status1(Page0 - F8h) 55
2.5.36. UP_STATUS2: UP check status2(Page0 - F9h) 55
2.5.37. UP_STATUS3: UP check status3(Page0 - FAh) 55
2.5.38. UP_STATUS4: UP check status4(Page0 - FBh) 55
2.6. Jadard page 1 command Description 56
2.6.1. POWER_OPT: Power engineer test mode register (Page1 - B2h) 56
2.6.2. POWER_TEST: Set Power control (Page1 - B4h) 57
2.6.3. OTP_ESD_SET: Auto reload OTP function(Page1 - B5h) 57
2.6.4. DCDC_OPT: DCDC design setting (Page1 - B7h) 58
2.6.5. SET_GPO: General Purpose Output setting(Page1 - BBh) 60
2.6.6. PWR_SEQ_ACCESS: power sequence control (Page1 - BCh) 62
2.6.7. PWR_SEQ_ACCESS_RD: power sequence control read (Page1 - BDh) 62
2.6.8. GAMMA_POWER_TEST: Set GAMMA power related setting (Page1 - BEh) 63
2.6.9. SETRGBCYC2: Set RGB IF source switch control timing (Page1 - C1h) 64
2.6.10. SETSTBA2: Set internal source option control (Page1 - C2h) 67
2.6.11. SETTCON_OPT: (Page1 - C3h) 68
2.6.12. SET_GAMMA_OP: Set Gamma OP related setting (Page1 - C4h) 70
2.6.13. SET_OSCM: Oscillator M setting (Page1 - C5h) 71
2.6.14. SET_IO_PAD: Set IO Pad output driving ability (Page1 - C8h) 72
2.6.15. SET_INH_CHKSUM: Set inhosue checksum(Page1 - D7h) 72
2.6.16. HWPIN_OFF: TEST_EN Register setting(Page1 - E7h) 73
2.6.17. STD_SEL: Standard command option R0Ah/R0Fh (Page1 - E9h) 73
2.6.18. SET_ESD_DET: SET ESD detect function (Page1 - EBh) 74
2.6.19. SET_WRX: SET WRX timing (Page1 - EEh) 74
2.7. Jadard page 2 command Description 75
2.7.1. GRAM_OPT_SET: GRAM OPTION SELECTION (Page2 - B0h) 75
2.7.2. INTR_ACC_SET: (Page2 - B4h) 75
2.7.3. GRAM_TMG_SET (Page2 - B5h) 75
2.7.4. GRAM_PWR_SET (Page2 - B6h) 76
2.7.5. GRAM_XREPAIR_L0 (Page2 - B8h) 76

2.7.6. GRAM_XREPAIR_L0(Page2 - B9h) 77
2.7.7. SET_DBGSEL(Page2 - BAh) 77
2.7.8. SETROM (Page2 - BBh) 77
2.7.9. TEST_CTRL: Source option for CP test (Pag2 - BCh) 78
2.7.10. INH_CHKSUM_LOCK: Inhouse checksum lock setting (Pag2 - BDh) 78
2.7.11. INH_CHKSUM_DBG: Inhouse checksum debug (Page2 - RBEh) 79
2.7.12. TEST_PAD_SEL (Page2 - BFh) 80
2.7.13. SET_TC_CHKSUM (Page2 - C0h) 81
2.7.14. SET_TC_OTHER (Page2 - C1h) 81
2.7.15. GRAM_BIST_SET (Page2 - E5h) 82
2.7.16. GRAM_BIST_SET (Page2 - E6h) 83
2.7.17. GRAM_CHKSUM_GET (Page2 - E7h) 83
2.8. Jadard page 3 command Description 84
2.8.1. TRIMMING2: Trimming for VREF (Page3 - B3h) 84
2.8.2. TRIMMING3: Trimming for Band Gap (Page3 - B4h) 84
2.8.3. TRIMMING4: Trimming for VDDD (Page4 - B5h) 84
2.8.4. TRIMMING6: Trimming for Gamma reference voltage (Page3 - B7h) 85
2.8.5. TRIMMING9: Trimming for VGH/VGL/AVDD/AVEE volatge (Page3 - BAh) 85
2.8.6. TRIM_GAS: Trimming for GAS (Page3 - BEh) 86
2.8.7. TRIMMING_OSCM1: Trimming temperature characteristics of Oscillator M (Page4 - C7h) .. 86
2.8.8. TRIMMING_OSCM2: Trimming frequency of Oscillator M (Page4 - C8h) 87
3. JADARD COMMAND LIST 88
3.1. OTP table 88
3.2. OTP Programming Flow 91
3.3. Programming Sequence 92
3.4. OTP Programming example of VCOM setting 93
3.5. OTP read example 94
4. Read sequence for inhouse register 95
4.1. Serial interface read sequence for inhouse register 95
4.2. Parallel interface read sequence for inhouse register 95

1. Revision History

Version	Date	Description of modification
0.00	2023/07/14	New setup
0.01	2023/08/18	Correcting description to P0, DFh Add Read sequence for inhouse register
0.02	2023/09/20	Correcting description to P0, C4h
0.03	2023/11/28	Optimizing OTP programming flow
0.04	2024/1/26	Optimizing OTP programming flow
0.05	2024/12/17	Correcting Programming Sequence

2. JADARD COMMAND LIST

2.1. Jadard page 0 command

Index	Operation Code	R/W	D7	D6	D5	D4	D3	D2	D1	D0	Default (Hex)
B0	SEQUENCE_CTRL	R/W	-	-	-	-	DC_UP_MODE[1:0]		DC_DN_MODE[1:0]		00
		R/W	-	-	-	-	T0P[1:0]		T8P[1:0]		0A
		R	-	-	-	-	-	-	-	POW_ON_STATE	00
B2	VGPOW_SET	R/W	-	VGPOW_OFFSET[6:0]							28
		R	-	-	-	-	-	-	VGPOW_SET_OTP_TIMES[1:0]		00
B7	GAMMA_SET	R/W	-	VGSP_S[6:0]							09
		R/W	-	VGMP_S[6:0]							29
		R/W	-	VGSN_S[6:0]							09
		R/W	-	VGMN_S[6:0]							29
		R	-	-	-	-	-	-	GAMMA_SET_OTP_TIMES[1:0]		00
B8	OTP_SET	R/W	-	-	VPP_DT[1:0]		-	-	VPP_VGHZ_RT[1:0]		33
		R/W	VPP_VGHZNC	VPP_VGHZ_S[2:0]			VPP_PWRCLK_DIV2	VPP_VGHZ_CLK[2:0]			53
		R/W	-	-	VPP_AVDDZ_S[1:0]		-	VPP_MVZ_S_CLK[2:0]			07
B9	POW_CTRL	R/W	-	AP[2:0]			-	MVZ_EN	-	VGM_EN	35
		R/W	AVDDZ_NC	AVEEZ_NC	VGHZ_NC	VGLZ_NC	-	-	VGHZ_EN	VGLZ_EN	03
BA	POWER_STATE	R/W	-	-	-	-		-	-	DSTBY	00
BB	DCDC_SEL	R/W	-	VGHZ_S[2:0]			PWRCLK_DIV2	VGLZ_S[2:0]			3C
		R/W	VGHZ_RT[1:0]		AVDDZ_S[1:0]		VGLZ_RT[1:0]		AVEEZ_S[1:0]		95
		R/W	-	VGHZ_CLK[2:0]			-	VGLZ_CLK[2:0]			77
		R/W	-	MVZ_S_CLK[2:0]			-	MVZ_G_CLK[2:0]			77
		R/W	-	MVZ_NS_CLK[2:0]			HV_CLKP[1:0]		MV_CLKP[1:0]		7A
		R/W	VGHZ_CLKE[1:0]		VGLZ_CLKE[1:0]		MVZ_S_CLKE[1:0]		MVZ_NS_CLKE[1:0]		FF
BC	VDDD_CTRL	R/W	-	AVSSN_EN	AVSSN_S[1:0]		-	VDDD_S[2:0]			73
BD	SETRGBIF	R/W	-	-	BLK_OPT	DEM	VSPL	HSPL	DEPL	PCPL	22
		R/W	-	-	RGB_SEL[1:0]		-	-	-	-	00
		R/W	RGB_SYNC_LN[7:0]								A0
		R/W	RGB_SYNC_RESO_X[7:0]								3C
		R/W	-	RGB_SYNC_VBP[6:0]							0A
		R/W	RGB_SYNC_HBP[7:0]								16

BE	GAS_CTRL	R/W	-	-	GAS_SLPIN_EN	-	GAS_VCI_EN	GAS_IOVCC_EN	GAS_BLK_NUM[1:0]		**2E**
		R/W	GAS_DBS_SEN	GAS_DBS_GEN	-	GAS_DBS_LTH[4:0]					**8C**
		R/W	-	-	DC_GAS_VGH_EN	DC_GAS_VGL_EN	-	-	DC_GAS_MVZ_EN	-	**20**
C0	SETSTBA	R/W	-	GAP[2:0]			SAP[3:0]				**22**
		R/W	SAP2_GAP2_EN	GAP2[2:0]			SAP2[3:0]				**22**
C1	SETPANEL	R/W	-	-	-	SS_PANEL	GS_PANEL	REV_PANEL	CFHR	-	**00**
C2	SET_BIST	R/W	-	LNPERLVL[1:0]		-	TEST_PATEN	TEST_PATTERN[2:0]			**00**
C3	SETRGBCYC	R/W	-	RGB_INV_PI[1:0]		RGB_INV_I[1:0]		IDLE_TYPE	RGB_INV_NP[1:0]		**7F**
		R/W	-	-	-	-	RGB_GND[3:0]				**07**
		R/W	-	-	-	RGB_EQ1[4:0]					**0E**
		R/W	-	-	-	RGB_EQ2[4:0]					**0E**
		R/W	RGB_CHGEN_OFF[1:0]		RGB_CHGEN_ON[5:0]						**C8**
		R/W	RGB_OFF[7:0]								**71**
		R/W	GAOPOFF_1ST_OFF	GAOPOFF_POL	GAOPOFFEN	GAOPOFF[4:0]					**6C**
		R/W	GAP2_ON[3:0]				SAP2_ON[3:0]				**77**
C4	SET_TCON	R/W	-	-	-	-	VBFP_RATIO[1:0]		TE_OPT[1:0]		**00**
		R/W	-	TE_DELAY[6:0]							**00**
		R/W	LN[7:0]								**A0**
		R/W	SLT_NP[7:0]								**79**
		R/W	-	VFP_NP[6:0]							**0E**
		R/W	-	VBP_NP[6:0]							**0A**
		R/W	-	HBP_NP[6:0]							**16**
		R/W	SLT_I[7:0]								**79**
		R/W	-	VFP_I[6:0]							**0E**
		R/W	-	VBP_I[6:0]							**0A**
		R/W	-	HBP_I[6:0]							**16**
		R/W	HBP_NCK[3:0]				HFP_NCK[3:0]				**82**

C8	SET_R_GAMMA	R/W	-	-	RPA15[5:0]						**3F**
		R/W	-	-	RPA14[5:0]						**3E**
		R/W	-	-	RPA13[5:0]						**23**
		R/W	-	-	RPA12[5:0]						**11**
		R/W	-	-	RPA11[5:0]						**13**
		R/W	-	-	RPA10[5:0]						**14**
		R/W	-	-	RPA9[5:0]						**13**
		R/W	-	-	RPA8[5:0]						**17**
		R/W	-	-	RPA7[5:0]						**1B**
		R/W	-	-	RPA6[5:0]						**1E**
		R/W	-	-	RPA5[5:0]						**22**
		R/W	-	-	RPA4[5:0]						**23**
		R/W	-	-	RPA3[5:0]						**25**
		R/W	-	-	RPA2[5:0]						**28**
		R/W	-	-	RPA1[5:0]						**1F**
		R/W	-	-	RPA0[5:0]						**0E**
		R/W	-	-	RNA15[5:0]						**3F**
		R/W	-	-	RNA14[5:0]						**3E**
		R/W	-	-	RNA13[5:0]						**23**
		R/W	-	-	RNA12[5:0]						**10**
		R/W	-	-	RNA11[5:0]						**12**
		R/W	-	-	RNA10[5:0]						**14**
		R/W	-	-	RNA9[5:0]						**11**
		R/W	-	-	RNA8[5:0]						**12**
		R/W	-	-	RNA7[5:0]						**14**
		R/W	-	-	RNA6[5:0]						**17**
		R/W	-	-	RNA5[5:0]						**18**
		R/W	-	-	RNA4[5:0]						**16**
		R/W	-	-	RNA3[5:0]						**18**
		R/W	-	-	RNA2[5:0]						**18**
		R/W	-	-	RNA1[5:0]						**18**
		R/W	-	-	RNA0[5:0]						**0E**
CE	IF_OPTION	R/W	-	IF_OPTION[6:0]							**6A**
		R/W	-	QSPI_SDO_TYPE[1:0]		-	STD_RD_DCX_LOW_E	STD_CSX_LOW_EN	RGB666_TYPE	RGB_BIT_REV	**00**
		R/W	-	-	LN_2B_WREN	MV_2A2B_LN_EN	DPI_STOP_SOL_EN	DUMMY_0B_03_EN	DB_OE_9BOPT	DB_OE_OPT	**04**

D0	SET_GD	R/W	-	-	-	-	-	GD_GAS_GATE_CLK	-	GD_LRSW	**04**
		R/W	-	-	GD_ON[5:0]						**06**
		R/W	GD_OFF[7:0]								**6B**
		R/W	-	-	-	GD_EQ_PTR0[4:0]					**07**
		R/W	-	-	-	GD_EQ_PTR1[4:0]					**03**
D3	ABE_CTRL	R/W	-	ABE_EN	ABE_DIM_EN	LE_ABE_BASE[4:0]					**28**
		R/W	ABE_DIM_FPS[3:0]				-	COLENG_SP_V0_EN	COLENG_SP_V63_EN	-	**16**
		R/W	ABE_GATING_EN[7:0]								**FF**
D6	OTP_REPAIR	R/W	-	-	-	-	-	-	REPAIR_PAGE[1:0]		**00**
		R/W	REPAIR_INDEX[7:0]								**00**
		R/W	REPAIR_PAR[7:0]								**00**
		R/W	REPAIR_VALUE[7:0]								**00**
		R	-	-	-	-	OTP_REMAINDER[3:0]				**-**
D7	RAMCTRL	R/W	-	CR_OPTION	SPI_2LAN_EN	RP	RM	MLBIT_INV	DM[1:0]		**00**
		R/W	SCL_PL	EXT_VS_PL	EPF[1:0]		ENDIAN[1:0]		MDT[1:0]		**30**
D8	AUTO_DISP_SETTING	R/W	-	-	-	-	GON	DTE	DISP_REG[1:0]		**08**
		R/W	-	-	DISP_SW_OPT[1:0]		-	BLK_DISABLE	BLK_MODE[1:0]		**01**
D9	OTP_PROG	R/W	-	OTP_INDEX[6:0]							**00**
		R/W	-	-	-	OTP_READ_SINGLE	OTP_WRITE_SINGLE	OTP_LOAD_DISABLE	OTP_INT_VPP	OTP_AUTO_PROG	**00**
		R	OTP_RDATA[7:0]								**-**
		R/W	OTP_WDATA[7:0]								**00**
		R/W	-	-	-	-	-	OTP_RLD_PTM[1:0]		-	**00**
		R/W	OTP_PPROG	OTP_VPP_SEL	OTP_PRD	OTP_PWE	-	-	OTP_PTM[1:0]		**00**
DD	SET_WD	R/W	-	WD_OFF	WD_MODE[1:0]		FBLK_EN	WD_CLK_SEL[2:0]			**2C**
		R/W	WD_TIMER_TCON[7:0]								**A3**
		R/W	-	-	-	-	-	ESD_TCON_OPT	ESD_SD_OPT	ESD_PRT_EN	**00**
		R	-	-	-	-	-	-	WD_FMS	WD_FBLK	**00**
DE	SET_PAGE	R/W	-	-	-	-	-	-	PAGE[1:0]		**00**
DF	SET_PASSWD	R/W	PASSWD1[7:0]								**00**
		R/W	PASSWD2[7:0]								**00**
E6	SETECO	R/W	-	ECO0[6:0]							**00**
E7	GET_ID_VERSION	R	JD_ID1[7:0]								**98**
		R	JD_ID2[7:0]								**53**
		R	JD_ID3[7:0]								**00**
		R/W	JD_ID_PASSWD1[7:0]								**00**
		R	JD_ID1_INHOUSE[2:0]			JD_ID2_INHOUSE[4:0]					**25**

E8	UP_START_CTRL	R/W	UP_KEY1[7:0]								00
		R/W	UP_START_EN[7:0]								00
		R/W	PWR_KEY[7:0]								00
E9	SETID	R/W	-	-	-	-	-	-	-	-	**00**
		R/W	ID1[7:0]								**98**
		R/W	ID2[7:0]								**53**
		R/W	ID3[7:0]								**00**
		R/W	ID4[7:0]								**00**
		R	-	-	-	-	-	-	SETID_OTP_TIMES[1:0]		**00**
F0	SELF_DIAG	R	REGLOAD_DETEC	FUNC_DETEC	ATTACH_DETEC	GBREAK_DETEC	-	-	-	-	**00**
F1	SPI_CMD	R/W	SPI_CMD_INDEX[7:0]								**00**
F2	SPI_READ	R	SPI_READ_DATA[7:0]								**00**
F5	**F5_CMD**	R	-	-	-	-	-	-	-	TELINE[8]	**00**
		R	TELINE[7:0]								**00**
		R	-	-	-	-	-	-	-	SC[8]	**00**
		R	SC[7:0]								**00**
		R	-	-	-	-	-	-	-	EC[8]	**00**
		R	EC[7:0]								**EF**
		R	-	-	-	-	-	-	-	SP[8]	**00**
		R	SP[7:0]								**00**
		R	-	-	-	-	-	-	-	EP[8]	**01**
		R	EP[7:0]								**3F**
		R	-	-	-	-	-	-	-	SR[8]	**00**
		R	SR[7:0]								**00**
		R	-	-	-	-	-	-	-	ER[8]	**01**
		R	ER[7:0]								**3F**
		R	-	-	-	-	-	-	-	TFA[8]	**00**
		R	TFA[7:0]								**00**
		R	-	-	-	-	-	-	-	VSA[8]	**01**
		R	VSA[7:0]								**40**
		R	-	-	-	-	-	-	-	BFA[8]	**00**
		R	BFA[7:0]								**00**
		R	-	-	-	-	-	-	-	VSP[8]	**00**
		R	VSP[7:0]								**00**

F8	UP_STATUS 1	R	UP_STA1[7:0]	-
F9	UP_STATUS 2	R	UP_STA2[7:0]	-
FA	UP_STATUS 3	R	UP_STA3[7:0]	-
FB	UP_STATUS 4	R	UP_STA4[7:0]	-

2.2. Jadard page 1 command

Index	Operation Code	R/W	D7	D6	D5	D4	D3	D2	D1	D0	Default (Hex)
B2	POWER_OPT	R/W	-	PDS[14:8]							13
		R/W	PDS[7:0]								A2
B4	POWER_TEST	R/W	-	-	-	-	-	-	-	SFT_CONT EN	00
B5	OTP_ESD_SET	R/W	ESD_FRM_CNT_EN[7:0]								00
		R/W	ESD_FRM_CNT[7:0]								77
B7	DCDC_OPT	R/W	-	MVZ_NOPS	-	-	DDS[3:0]				03
		R/W	-	HVZ_NOPS	-	HVZ_DISCH	-	-	EQ1_EN	EQ2_EN	13
		R/W	MV_CLKGT EN	VGLZ_CLK GT_EN	VGHZ_CLK GT_EN	DCDC_CLK_S[4:0]					06
		R/W	MV_G_CLK GT_EN	DCDC_CLK_E[6:0]							36
		R/W	-	DCDC_EQ1_EXT[6:0]							20
BB	SET_GPO	R/W	-	TE_REV	-	-	TE_SEL[3:0]				01
		R/W	-	GPO0_REV	GPO0_OE	-	GPO0_SEL[3:0]				22
		R/W	-	GPO1_REV	GPO1_OE	-	GPO1_SEL[3:0]				23
		R/W	INTERNAL_SEL2[3:0]				INTERNAL_SEL1[3:0]				00
BC	PWR_SEQ_ACCESS	R/W	-	-	PWR_POS_DISCH	PWR_POW EN	-	-	-	PWR_SOFT	00
		R/W	PWR_DC[7:0]								00
BD	PWR_SEQ_ACCESS_RD	R	-	-	UP_POS_DISCH	UP_POW_EN	-	-	-	UP_SOFT	00
		R	UP_DC[7:0]								00
BE	MA_POWER_	R/W	-	-	-	-	VGMP_TEST	VGSP_TEST	VGSN_TEST	VGMN_TEST	0F
C1	SETRGBCYC2	R/W	-	SDPRDUM	SDDUM[1:0]		SDSW[1:0]		SDPORCH[1:0]		10
		R/W	-	WB_V0_PGND_SKIP	WB_POL_KEEP_V63_E	WB_POL_KEEP_V0_E	RGB_SPAIF[1:0]		RGB_SPAIB[1:0]		05
		R/W	WB_FLAG G63	WB_SD_V0_FLAG	SDSW_GAS[1:0]		DUM_CHGEN_ON	DUM_GAOPOFF_ON	SDPARTIAL[1:0]		00
C2	SETSTBA2	R/W	-	-	-	-	SDT[3:0]				06
		R/W	SDS[15:8]								02
		R/W	SDS[7:0]								E7

C3	SETTCON_OPT	R/W	-	-	-	-	GAS_PULL GND_OPT	TE_GATIN G_OPT	EQS_OFF_ OPT	DISLEARN VBP	**08**
		R/W	-	-	-	LCLK_PAR K_STA	PWR_TC_C LK_OFF	PWR_SD_ OFF	DISP2TO3_ OPT	DISP2TO3_ EN	**00**
		R/W	L2EN_STR _OPT	STPLUSE_E[2:0]			-	-	STPLUSE_S[1:0]		**10**
		R/W	L3EN_E[3:0]				L3EN_S[3:0]				**42**
		R/W	L2EN_OFFSET[7:0]								**01**
		R/W	L2EN0_E[3:0]				L2EN0_S[3:0]				**31**
		R/W	L2EN1_E[3:0]				L2EN1_S[3:0]				**53**
		R/W	L2EN2_E[3:0]				L2EN2_S[3:0]				**64**
		R/W	L2EN3_E[3:0]				L2EN3_S[3:0]				**75**
		R/W	L2EN_STR[7:0]								**82**
C4	SET_GAMM A_OP	R/W	-	GAOPENN	GAOPENC	GAOPENP	R1P[1:0]		R0P[1:0]		**70**
		R/W	-	-	-	GAOP_CL AMP	R1N[1:0]		R0N[1:0]		**10**
C5	SET_OSCM	R/W	-	-	OSC_DIV[1:0]		-	-	OSCM_ADJ[1:0]		**01**
		R/W	-	-	-	-	-	-	OSCM_EN	OSCM_BIA S_EN	**00**
		R/W	OSC_KEY[7:0]								**00**
C8	SET_IO_PA D	R/W	-	-	-	IM_DSIO	-	-	-	IO_HOLDD LY	**01**
		R/W	IM_REG[3:0]				IM_EN[2:0]			-	**00**
D7	SET_INH_CH KSUM	R/W	-	INH_CHKSUM_PAGE_S EL[1:0]		SLPIN_RES ET_EN	INH_CHKS UM_OFF	INH_CHKSUM_SEL[2:0]			**1A**
E7	HWPIN_OFF	R/W	-	-	-	-	TEST_EN_REG[3:0]				**01**
E9	STD_SEL	R/W	-	-	RX0F_B0_ SEL	DISPON_SE L	RX0A_B2_ MIX	RX0A_B0_ MIX	-	-	**00**
EB	SET_ESD_DET	R/W	-	-	ERR_FG_SEL[1:0]		-	-	ESD_DET_ EN	CMD_VS_T G_EN	**00**
		R/W	-	HS_WIDTH[6:0]							**20**
EE	SET_WRX	R/W	-	-	-	-	-	-	-	WRX_SEL	**00**

2.3. Jadard page 2 command

Index	Operation Code	R/W	D7	D6	D5	D4	D3	D2	D1	D0	Default (Hex)
B0	GRAM_OPT	R/W	-	-	-	GRAM_CHKSUM_EN	GRAM_DATA_OW	-	-	-	**00**
B4	INTR_ACC_SET	R/W	-	-	INTR_DISP_VAL[5:0]						**00**
B5	GRAM_TMG_SET	R/W	-	GRAM_DMY0[4:2]			GRAM_SWON[1:0]		GRAM_SWOFF[1:0]		**0A**
		R/W	GRAM_DMY0[1:0]		GRAM_RDS[5:0]						**14**
B6	GRAM_PWR_SET	R/W	-	-	-	-	-	-	GRAM_OFF[1:0]		**00**
		R/W	-	GRAM_PWR_OPT	GRAM_RST_R	GRAM_RST_L	GRAM_PWR_R[1:0]		GRAM_PWR_L[1:0]		**00**
B8	GRAM_XREPAIR_L	R/W	-	-	-	-	GRAM_REPAIR_EN0_L	GRAM_REPAIR_EN1_L	GRAM_REPAIR_ROW0	GRAM_REPAIR_ROW1	**00**
		R/W	GRAM_REPAIR_ROW0_L[7:0]								**00**
		R/W	GRAM_REPAIR_ROW1_L[7:0]								**00**
B9	GRAM_XREPAIR_R	R/W	-	-	-	-	GRAM_REPAIR_EN0_R	GRAM_REPAIR_EN1_R	GRAM_REPAIR_ROW0	GRAM_REPAIR_ROW1	**00**
		R/W	GRAM_REPAIR_ROW0_R[7:0]								**00**
		R/W	GRAM_REPAIR_ROW1_R[7:0]								**00**
BA	SET_DBGSEL	R/W	DBG_SEL[7:0]								**00**
		R/W	DBG_SEL[8]	-	-	-	-	-	DBG_LOWEN	DBG_EN	**00**
BB	SETROM	R/W	-	-	-	-	ODS[3:0]				**00**
BC	TEST_CTRL	R/W	OSC_TEST EN	-	-	S_CP_POL_GATING[4:0]					**00**
BD	INH_CHKSUM_LOCK	R/W	-	-	-	-	-	-	NO_CHKSUM_EN[1:0]		**00**
		R/W	INH_CHKSUM_LOCK_EN[7:0]								**00**
BE	INH_CHKSUM_DBG	R/W	-	-	-	-	-	UP_TEST_MODE_EN	INH_CMPR_RST	TEST_MODE_EN	**00**
		R	INH_FCS[7:0]								**-**
		R	INH_CCS[7:0]								**-**
		R	LOCK_FCS[7:0]								**-**
		R	-	-	-	-	-	-	-	INH_CS_CMPR	**-**
		R	PN_CS[7:0]								**-**
BF	TEST_PAD_SEL	R/W	-	-	TEST_GAMMA_SEL[5:0]						**00**
		R/W	-	-	-	-	-	TESTPOW_S[2:0]			**00**
C0	SET_TC_CHKSUM	R/W	-	-	-	-	-	-	CRC_OPT	TC_CRC_EN	**00**
		R	-	-	TC_CRC_OUT[5:0]						**-**
C1	SET_TC_OTHER	R/W	TC_BACKUP[7:0]								**03**

E5	GRAM_BIST_SET	R/W	-	-	-	-	-	-	GRAM_MBIST_SCAN_	GRAM_BIST_EN	**00**
		R/W	-	-	-	-	-	GRAM_MBIST_ALGO_SEL[2:0]			**04**
		R/W	-	-	GRAM_MBIST_UD_PTN_TOGGLE[1:0]		-	-	GRAM_MBIST_UD_PTN[17:16]		**20**
		R/W	GRAM_MBIST_UD_PTN[15:8]								**00**
		R/W	GRAM_MBIST_UD_PTN[7:0]								**00**
E6	GRAM_BIST_RESULT	R	-	GRAM_MBIST_DONE	GRAM_MBIST_FAIL	GRAM_MBIST_REPAIR	MBIST_FAIL_NUM_R[1:0]		MBIST_FAIL_NUM_L[1:0]		**10**
		R	-	-	-	-	MBIST_FAIL_ADDR_R	MBIST_FAIL_ADDR_R	MBIST_FAIL_ADDR_L	MBIST_FAIL_ADDR_L	**00**
		R	MBIST_FAIL_ADDR_L_0[7:0]								**00**
		R	MBIST_FAIL_ADDR_L_1[7:0]								**00**
		R	MBIST_FAIL_ADDR_R_0[7:0]								**00**
		R	MBIST_FAIL_ADDR_R_1[7:0]								**00**
E7	GRAM_CHKSUM	R	-	-	GRAM_WR_CHKSUM[5:0]						**00**
		R	-	-	GRAM_RD_CHKSUM[5:0]						**00**

2.4. Jadard page 3 command

Index	Operation Code	R/W	D7	D6	D5	D4	D3	D2	D1	D0	Default (Hex)
B3	TRIMMING2	R/W	-	-	-	VREF_T[4:0]					**10**
B4	TRIMMING3	R/W	-	-	-	-	-	BG1_T[2:0]			**04**
B5	TRIMMING4	R/W	-	VDDD_T0[2:0]			-	-	VDDD_T1[1:0]		**31**
B7	TRIMMING6	R/W	-	VGSP_T[2:0]			-	VGMP_T[2:0]			**44**
		R/W	-	VGSN_T[2:0]			-	VGMN_T[2:0]			**44**
BA	TRIMMING9	R/W	-	-	VGHZ_T[1:0]		-	-	VGLZ_T[1:0]		**11**
		R/W	-	AVDDZ_T[2:0]			-	AVEEZ_T[2:0]			**33**
BE	TRIM_GAS	R/W	-	GASTRIM_VCI[2:0]			-	-	GASTRIM_IO[1:0]		**42**
C7	TRIMMING_OSCM1	R/W	-	OSCM_TEMP[2:0]			-	-	-	-	**30**
C8	TRIMMING_OSCM2	R/W	-	-	-	OSCM_TRIM[4:0]					**0C**

2.5. Jadard page 0 command Description

2.5.1. SEQUENCE CTRL: Power on sequence control (Page0 - B0h)

CMD_ADD	R/W	D7	D6	D5	D4	D3	D2	D1	D0	HEX
Command	**R/W**	1	0	1	1	0	0	0	0	B0
Parameter 1	**R/W**	-	-	-	-	DC_UP_MODE[1:0]		DC_DN_MODE[1:0]		-
Parameter 2	**R/W**	-	-	-	-	T0P[1:0]		T8P[1:0]		-
Parameter 3	**R**	-	-	-	-	-	-	-	POW_ON_STATE	-

Description

This command is used to set power on-off sequence related setting.

DC_UP_MODE[1:0]: Select the power on sequence timing mode.

00:

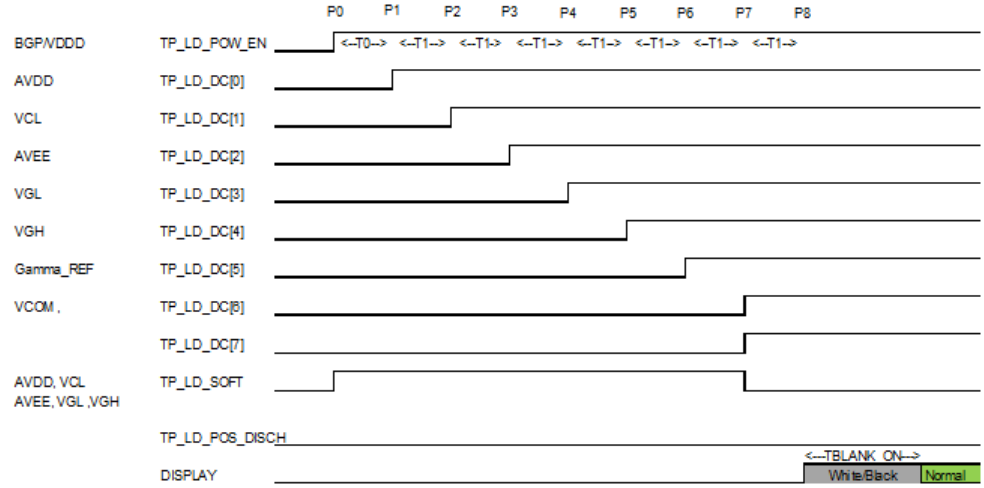

01:

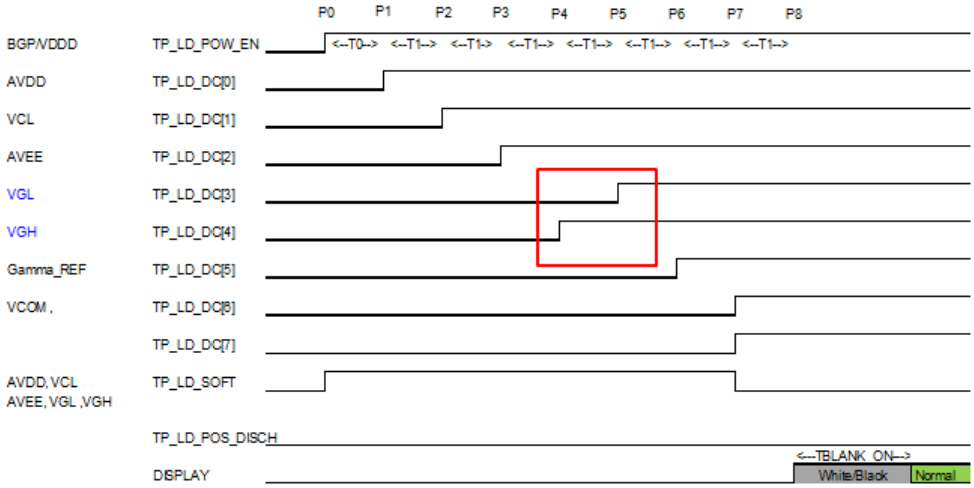

10:

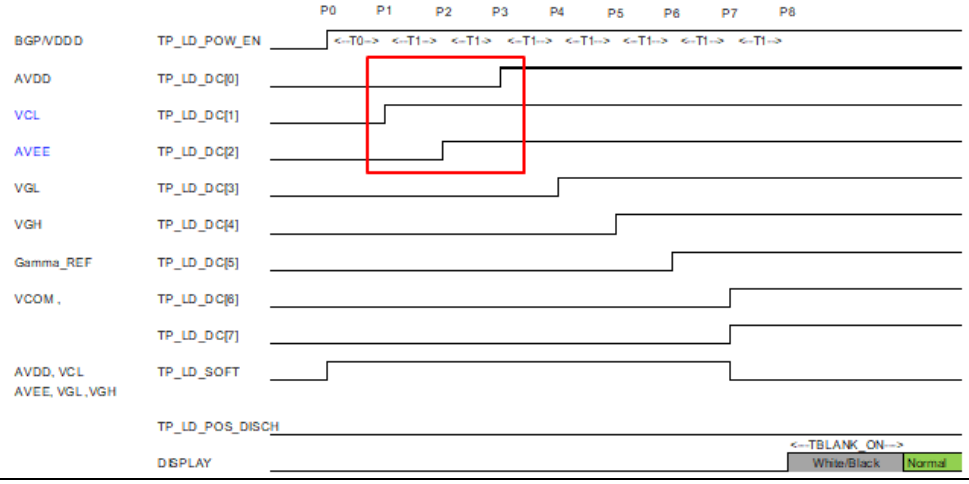

11:

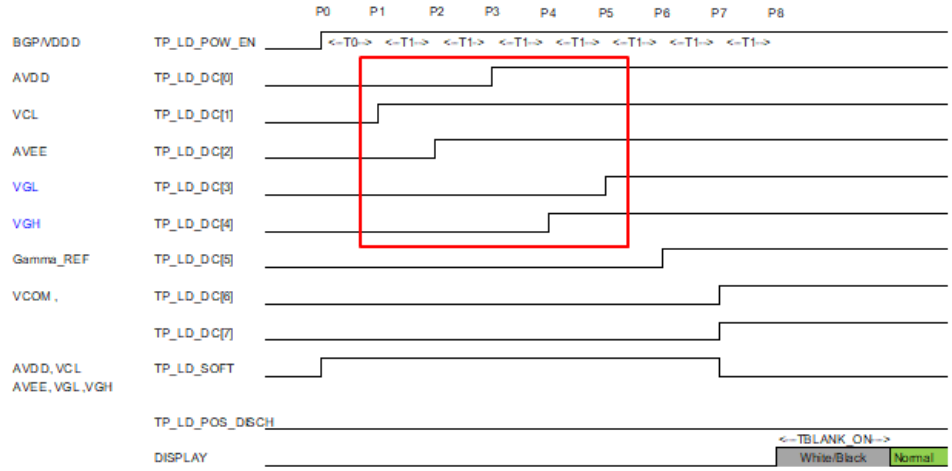

DC_DN_MODE[1:0]: Select the power off sequence timing mode.

00:

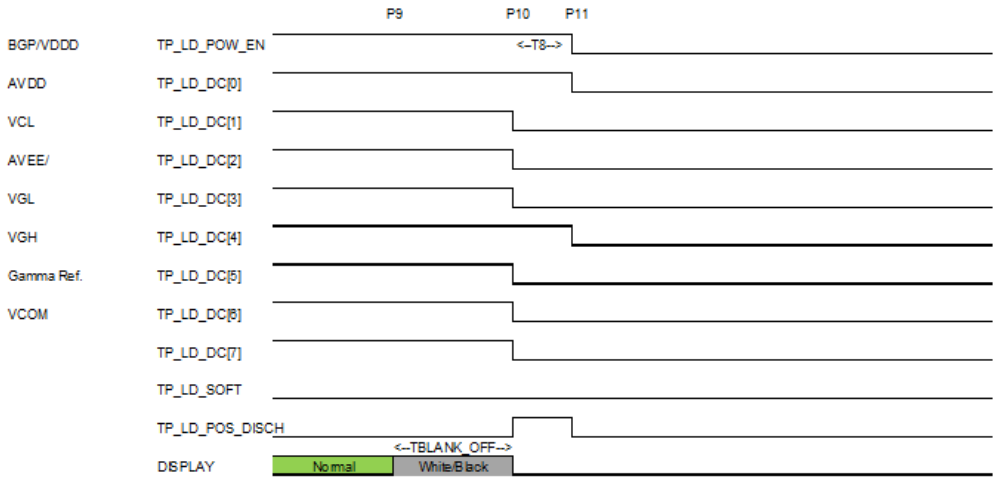

01:

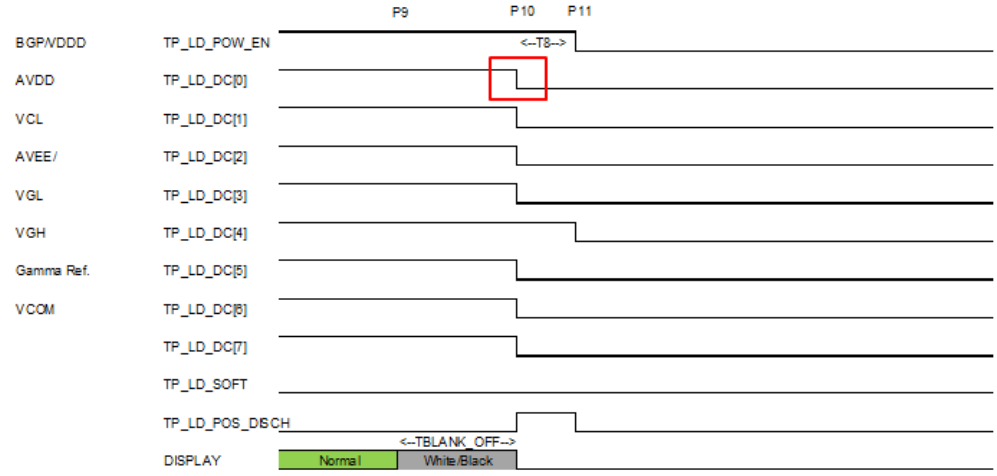

10:

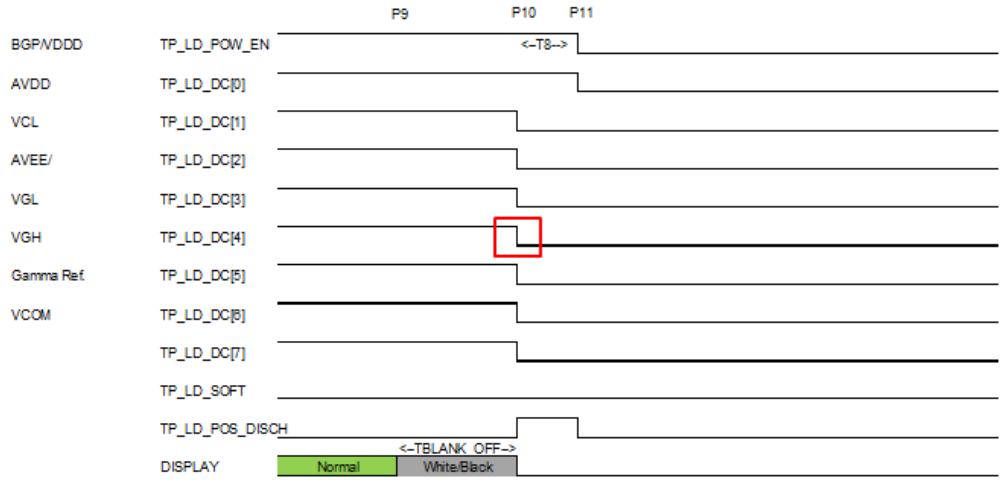

11:

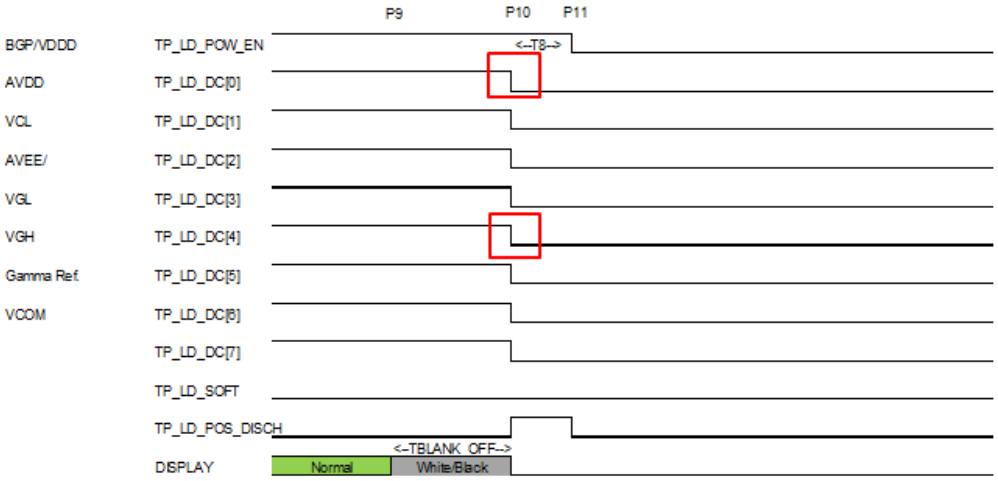

T0P[1:0]: Select the period time for T0.
T8P[1:0]: Select the period time for T8.

Power-on/off Period option		
TxP[1:0]	Period	
0	0.1ms	
1	1.6ms	
2	3.2ms	T0/T8 default
3	6.4ms	

POW_ON_STATE: All power ready when this bit is high.

Restriction	

2.5.2. VCOM_SET: Set VCOM voltage for normal scan direction(Page0 - B2h)

CMD/PAs	R/W	D7	D6	D5	D4	D3	D2	D1	D0	HEX
Command	**R/W**	1	0	1	1	0	0	1	0	B2
Parameter 1	**R/W**	VGPOW_OFFSET[6:0]								-
Parameter 2	**R**	-	-	-	-	-	-	VGPOW_OTP_ TIMES[1:0]		-

Description

This command is used to set VCOM voltage (used to Gamma shift voltage) and read OTP writing times for VCOM. (Gamma setting please refer to page2 BEh)

VGPOW_OFFSET[6:0]: Set VCOM voltage when normal scan.

VGPOW_OFFSET[6:0]	VCOM(v)
00h ~ 0Bh	Inhibit
0Ch	-0.300
~	-25mv/step
28h	-1.000
~	-25mv/step
64h	-2.500
65h ~ 7Fh	Inhibit

VGPOW_OTP_TIMES[1:0]: This register just can be written by up.
Due to VCOM is belonging to MTP, VGPOW_OTP_TIMES[1:0] is used to record OTP being programmed times of VCOM.

VCOM_OTP_TIMES[1:0]	OTP programmed times
00	No programmed
01	OTP programmed 1 times
10	OTP programmed 2 times
Others	Inhibit

Restriction

-

2.5.3. GAMMA_SET: Set positive / negative voltage of Gamma power (Page0 - RB7h)

CMD/PAs	R/W	D7	D6	D5	D4	D3	D2	D1	D0	HEX
Command	**R/W**	1	0	1	1	0	1	1	1	B7
Parameter 1	**R/W**	-	VGSP_S[6:0]							-
Parameter 2	**R/W**		VGMP_S[6:0]							-
Parameter 3	**R/W**	-	VGSN_S[6:0]							-
Parameter 4	**R/W**		VGMN_S[6:0]							-

Description

This command is used to set postive / Negative reference volatge of Gamma. (Gamma setting please refer to page2 BEh)

When Page1,BEh(GAMMA_POWER_TEST) set to 0x0F

VGMP_S[7:0]: Set power source volatge of postive polarity.

VGMP_S[7:0]	VGMP(V)
00h	0
01h	3.500
~	0.025/step
29h	4.500
~	0.025/step
7Dh	6.600
7Eh	AVDD
7Fh	Hiz

VGMN_S[7:0]: Set power source volatge of negative polarity.

VGMN_S[7:0]	VGMN(V)
00h	0
01h	-2.500
~	0.025/step
29h	-3.500
~	0.025/step
7Dh	-5.600
7Eh	AVEE
7Fh	Hiz

VGSP_S[6:0]: Set refernce volatge of postive polarity.

VGSP_S[6:0]	VGSP(V)
00h	0
01h	0.300
~	0.025/step
09h	0.500
~	0.025/step
5Fh	2.650
60~7Eh	2.650
7Fh	Hiz

VGSN_S[6:0]: Set refernce volatge of negative polarity.

VGSN _S[7:0]	VGMP(V)
00h	0
01h	0.300
~	0.025/step
09h	0.500
~	0.025/step
5Fh	2.650
60~7Eh	2.650
7Fh	Hiz

When Page1,BEh(GAMMA_POWER_TEST) set to 0x00

VGPOW_OFFSET[6:0]: Set VCOM voltage when normal scan.

VGPOW_OFFSET[6:0]	VCOM(v)
00h ~ 0Bh	Inhibit
0Ch	-0.300
~	-25mv/step
28h	-1.000
~	-25mv/step
64h	-2.500
65h ~ 7Fh	Inhibit

VGMP_S[7:0]: Set power source volatge of postive polarity.
VGMN_S[7:0]: Set power source volatge of negative polarity.
VGSP_S[6:0]: Set refernce volatge of postive polarity.
VGSN_S[6:0]: Set refernce volatge of negative polarity.

VGMP_S1[6:0] = VGMP_S[6:0] + VGPOW_OFFSET[6:0]
VGMN_S1[6:0] = VGMN_S[6:0] - VGPOW_OFFSET [6:0]
VGSP_S1[6:0]= VGPOW_OFFSET [6:0] + VGSP_S[6:0] - OffsetP(0Bh)
VGSN_S1[6:0]= VGPOW_OFFSET [6:0] – VGSN_S[6:0]– OffsetP(0Bh)

Limitation:
VGMP_S[6:0] + VGPOW_OFFSET [6:0] < 7Eh
VGMN_S[6:0] > VGPOW_OFFSET [6:0]
VGPOW_OFFSET [6:0] + VGSP_S[6:0] > 0Bh
VGPOW_OFFSET [6:0] > (VGSN_S[6:0] + 0Bh)

Restriction: -

2.5.4. OTP_SET: Set internal OTP program related setting(Page0 - B8h)

CMD/PAs	R/W	D7	D6	D5	D4	D3	D2	D1	D0	HEX
Command	**R/W**	1	0	1	1	1	0	0	0	B8
Parameter 1	**R/W**	-	-	VPP_DT[1:0]		-	-	VPP_VGHZ_RT[1:0]		-
Parameter 2	**R/W**	VPP_VGHZ_NC	VPP_VGHZ_S[2:0]			VPP_PWRCLK_DIV2	VPP_VGHZ_CLK[2:0]			-
Parameter 2	**R/W**	-	-	VPP_AVDDZ_S[1:0]		-	VPP_MVZ_S_CLK[2:0]			-

Description

This command is used to set internal OTP program relaetd setting.
VPP_DT[1:0]:When INT_VPP=1(D9h), internal OTP will program 1bit step by step until 1 byte program finished. VPP_DT[1:0] can define delay time between each cycle.

VPP_DT[2:0]	Delaytime (ms)
0h	0.25
1h	0.5
2h	1
3h	2

VPP_VGHZ_RT[1:0] : Working on OTP_INT_VPP=1.

VPP_VGHZ_RT[1:0]	VGH (V)
0	2*AVDD
1	
2	
3	

VPP_VGHZ_NC: Set VPP_VGHZ output state
0: clamping
1: no Clamping

VPP_PWRCLK_DIV2: Specify the OSCM frequency
0:OSCM=20MHz
1:OSCM=10MHz

VPP_VGHZ_S[2:0]: When OTP_INT_VPP=1, set VGH voltage level of internal OTP program.

VPP_VGHZ_S[2:0]	VPP_VGHZ Voltage
0	7.4
1	7.6
2	7.8
3	8
4	8.2
5	8.4
6	8.6
7	8.8

VPP_VGHZ_CLK[3:0] :
When OTP_INT_VPP=1, TP_LT_CPCLKZ [5] = VPP_VGHZ_CLK[3:0])

VPP_VGHZ_CLK[2:0] :	Frequency
0	OSCM / 24
1	OSCM / 16
2	OSCM / 12
3	OSCM / 8
4	OSCM / 6
5	OSCM / 4
6	OSCM / 3
7	OSCM / 2

AVDDZ_S[1:0]: Set clamping voltage level of AVDDZ.

AVDDZ_S[1:0]	AVDDZ (V)
0h	6.4
1h	6.6
2h	6.8
3h	inhibit

VPP_MVZ_S_CLK[2:0]: Set frequency of pumping clock of VPP_MVZ_NS.

VPP_VGHZ_CLK[2:0] :	Frequency
0	OSCM / 24
1	OSCM / 16
2	OSCM / 12
3	OSCM / 8
4	OSCM / 6
5	OSCM / 4
6	OSCM / 3
7	OSCM / 2

Restriction	-

2.5.5. POWER_CTRL2: Set power function related setting (Page0 - B9h)

CMD_ADD	R/W	D7	D6	D5	D4	D3	D2	D1	D0	HEX
Command	**R/W**	1	0	1	1	1	0	0	1	B9
Parameter 1	**R/W**	-	AP[2:0]			-	MVZ_EN	-	VGM_EN	-
Parameter 2	**R/W**	AVDDZ_NC	AVEEZ_NC	VGHZ_NC	VGLZ_NC	-	-	VGHZ_EN	VGLZ_EN	-

Description

This command is used to control engineer mode of power related setting.

AP[2:0]: Adjust the ratio of fixed current for the operatinal amplifier in the power supply circuit.

AP[2:0]	Bias Current
0h	25%
1h	50%
2h	75%
3h	100%
4h	125%
5h	150%
6h	175%
7h	200%

MVZ_EN: Control Source/Gamma MV charge pump
0: disable
1: enable

VGM_EN: Control Gamma power regulator output
0: disable
1: enable

AVDDZ_NC: Set AVDDZ output state
0: clamping
1: no Clamping

AVEEZ_NC: Set AVEEZ output state
0: clamping
1: no Clamping

VGHZ_NC: Set VGHZ output state.
0: clamping
1: no Clamping

VGLZ_NC: Set VGLZ output state
0: clamping
1: no Clamping

VGHZ_EN: Control VGHZ DC/DC circuit On/Off.
0: disable
1: enable

VGLZ_EN: Control VGLZ DC/DC circuit On/Off.
0: disable
1: enable

Restriction

2.5.6. POWER_STATE: Power status setting (Page0 - BAh)

CMD_ADD	R/W	D7	D6	D5	D4	D3	D2	D1	D0	HEX
Command	**R/W**	1	0	1	1	1	0	1	0	BA
Parameter 1	**R/W**	-	-	-	-	-	-	-	DSTBY	-
Description	This command is used to set power state. **DSTBY:** Standby mode select. DSTBY=1, driver IC enters the deep standby mode when POW_EN=0. DSTBY=0, driver IC enters the standby mode when POW_EN=0. When DSTBY=1, all the display operation stops, All the internal operations and R-C oscillators are suspended. Driver IC should receive reset pull low 3ms at leats to exist deep standby mode.									
Restriction										

2.5.7. DCDC_SEL: Power mode and charge pump related setting (Page0 - BBh)

CMD_ADD	R/W	D7	D6	D5	D4	D3	D2	D1	D0	HEX
Command	**R/W**	1	0	1	1	1	0	1	1	BB
Parameter 1	**R/W**		VGHZ_S[2:0]			PWR CLK_ DIV2	VGLZ_S[2:0]			-
Parameter 2	**R/W**	VGHZ_RT[1:0]		AVDDZ_S[1:0]		VGLZ_RT[1:0]		AVEEZ_S[1:0]		
Parameter 3	**R/W**	-	VGHZ_CLK[2:0]			-	VGLZ_CLK[2:0]			
Parameter 4	**R/W**	-	MVZ_S_CLK[2:0]			-	MVZ_G_CLK[2:0]			
Parameter 5	**R/W**	-	MVZ_NS_CLK[2:0]			HV_CLKP[1:0]		MV_CLKP[1:0]		
Parameter 6	**R/W**	VGHZ_CLKE[1:0]		VGLZ_CLKE[1:0]		MVZ_S_CLKE [1:0]		MVZ_NS_CLKE[1:0]		

Description

This command is used to set charge pump related setting. Which inlcude pumping frequency and ratio of voltage .

VGHZ_S[2:0]: Set clamping voltage level of VGLZ

VGHZ_S[2:0]	VGHZ Voltage
0	11
1	12
2	12.6
3	13.2
4	13.8
5	14.4
6	15
7	16

VGLZ_S[2:0]: Set clamping voltage level of VGLZ

VGHZ_S[2:0]	VGHZ Voltage
0	-7
1	-7.75
2	-8.5
3	-9.25
4	-10
5	-10.75
6	-11.5
7	-12.25

PWRCLK_DIV2: Specify the OSCM frequency
0:OSCM=20MHz
1:OSCM=10MHz

VGHZ_RT: Specify the charge pump ratio of VGHZ.

VGH Z_RT[1:0]	VGHZ charge pump
0	3*VCIPX2
1	AVDD+2*VCIPX2
2	2*AVDD+VCIPX2
3	3*AVDD

VGLZ_RT: Specify the charge pump ratio of VGLZ.

VGL Z_RT[1:0]	VGLZ charge pump
0	2*VCL – 2*VCI
1	3*VCL – 2*VCI
2	AVEE+VCL – 2*VCI
3	AVEE+2*VCL – 2*VCI

AVDDZ_S[1:0]: Set clamping voltage level of AVDDZ.

AVDDZ_S[1:0]	AVDDZ (V)
0h	6.4
1h	6.6
2h	6.8
3h	inhibit

AVEEZ_S[1:0]: Set clamping voltage level of AVEEZ_S.

AVEEZ_S[1:0]	AVEEZ (V)
0h	-4.2
1h	-4.4
2h	-4.6
3h	-4.8

VGHZ_CLK[2:0]: Set frequency of pumping clock of VGHZ under normal mode.
VGLZ_CLK[2:0]: Set frequency of pumping clock of VGLZ under normal mode.
MVZ_S_CLK[2:0]: Set frequency of pumping clock of MVZ_S under normal mode.
MVZ_NS_CLK[2:0]: Set frequency of pumping clock of MVZ_NS under normal mode.
MVZ_G_CLK[2:0]: Set frequency of pumping clock of MVZ_G under normal mode.
MVZ_S_CLKE[2:0]: Set frequency of pumping clock of MVZ_S under EQ mode.
MVZ_NS_CLKE[2:0]: Set frequency of pumping clock of MVZ_NS under EQ mode.

Register		**Register**	**APR Pin name**
MVZ_S_CLK[2:0] MVZ_NS_CLK[2:0]		MVZ_S_CLKE[1:0] MVZ_NS_CLKE[1:0]	TP_LT_CPCLKZ_S TP_LT_CPCLKZ_NS
0h	OSCM_D24	0h~3h	OSCM_D24
1h	OSCM_D16	0h~3h	OSCM_D16
2h	OSCM_D12	0h~3h	OSCM_D12
3h	OSCM_D8	0h~3h	OSCM_D8
4h	OSCM_D6	0h	OSCM_D16
		1h	OSCM_D12
		2h	OSCM_D8
		3h	OSCM_D6
5h	OSCM_D4	0h	OSCM_D12
		1h	OSCM_D8
		2h	OSCM_D6
		3h	OSCM_D4
6h	OSCM_D3	0h	OSCM_D8
		1h	OSCM_D6
		2h	OSCM_D4
		3h	OSCM_D3
7h	OSCM_D2	0h	OSCM_D6
		1h	OSCM_D4
		2h	OSCM_D3
		3h	OSCM_D2

Register	
MVZ_G_CLK[2:0]	
0h	OSCM_D24
1h	OSCM_D16
2h	OSCM_D12
3h	OSCM_D8
4h	OSCM_D6
5h	OSCM_D4
6h	OSCM_D3
7h	OSCM_D2

Register		Register	APR Pin name
VGHZ_CLK[2:0] VGLZ_CLK[2:0]		VGHZ_CLKE[2:0] VGLZ_CLKE[2:0]	TP_LT_CPCLKZ3 TP_LT_CPCLKZ4
0h	OSCM_D96	0h~3h	OSCM_D96
1h	OSCM_D64	0h~3h	OSCM_D64
2h	OSCM_D48	0h~3h	OSCM_D48
3h	OSCM_D32	0h~3h	OSCM_D32
4h	OSCM_D24	0h	OSCM_D64
		1h	OSCM_D48
		2h	OSCM_D32
		3h	OSCM_D24
5h	OSCM_D16	0h	OSCM_D48
		1h	OSCM_D32
		2h	OSCM_D24
		3h	OSCM_D16
6h	OSCM_D12	0h	OSCM_D32
		1h	OSCM_D24
		2h	OSCM_D16
		3h	OSCM_D12
7h	OSCM_D8	0h	OSCM_D24
		1h	OSCM_D16
		2h	OSCM_D12
		3h	OSCM_D8

HV_CLKP[1:0]: Set frequency of pumping clock of HV under soft start.
MV_CLKP[1:0]: Set frequency of pumping clock of MV under soft start.

HV_CLKP[1:0]	TP_LT_CPCLKZ3 TP_LT_CPCLKZ4
0h	MV_CLK[2:0] period X1
1h	MV_CLK[2:0] period X2
2h	MV_CLK[2:0] period X4
3h	MV_CLK[2:0] period X8

MV_CLKP[1:0]	TP_LT_MVZ_S TP_LT_MVZ_NS TP_LT_MVZ_G
0h	MV_CLK[2:0] period X1
1h	MV_CLK[2:0] period X2
2h	MV_CLK[2:0] period X4
3h	MV_CLK[2:0] period X8

Restriction	

2.5.8. VDDD_CTRL: Control logic voltage setting (Page0 - BCh)

<table>
<tr><th>CMD/Pas</th><th>R/W</th><th>D7</th><th>D6</th><th>D5</th><th>D4</th><th>D3</th><th>D2</th><th>D1</th><th>D0</th><th>HEX</th></tr>
<tr><td>Command</td><td>R/W</td><td>1</td><td>0</td><td>1</td><td>1</td><td>1</td><td>1</td><td>0</td><td>0</td><td>BC</td></tr>
<tr><td>Parameter 1</td><td>R/W</td><td>-</td><td>AVSSN_EN</td><td colspan="2">AVSSN_S[1:0]</td><td>-</td><td colspan="3">VDDD_S[2:0]</td><td>-</td></tr>
<tr><td>Description</td><td colspan="10">This command is used to control internal logic voltage setting.

VDDD_S[2:0]: Set VDDD voltage.
<table>
<tr><th>VDDD_S[2:0]</th><th>VDDD (V)</th></tr>
<tr><td>0h</td><td>1.434</td></tr>
<tr><td>1h</td><td>1.456</td></tr>
<tr><td>2h</td><td>1.478</td></tr>
<tr><td>3h</td><td>1.501</td></tr>
<tr><td>4h</td><td>1.523</td></tr>
<tr><td>5h</td><td>1.546</td></tr>
<tr><td>6h</td><td>1.568</td></tr>
<tr><td>7h</td><td>1.590</td></tr>
</table>

AVSSN_EN:Enable/disable AVSSN regulator.
AVSSN_S[1:0]:Set AVSSN voltage setting.
<table>
<tr><th>AVSSN_S[1:0]</th><th>AVSSN (V)</th></tr>
<tr><td>0h</td><td>2.0</td></tr>
<tr><td>1h</td><td>1.9</td></tr>
<tr><td>2h</td><td>1.8</td></tr>
<tr><td>3h</td><td>1.7</td></tr>
</table></td></tr>
<tr><td>Restriction</td><td colspan="10">-</td></tr>
</table>

2.5.9. SETRGBIF: (Page0 - BDh)

CMD/Pas	R/W	D7	D6	D5	D4	D3	D2	D1	D0	HEX
Command	**R/W**	1	0	1	1	1	1	0	1	BD
Parameter 1	**R/W**	-	-	BLK_ OTP	DEM	VSPL	HSPL	DEPL	PCPL	-
Parameter 2	**R/W**	-	-	RGB_SEL[1:0]		-	-	-	-	-
Parameter 3	**R/W**	RGB_SYNC_LN[7:0]								-
Parameter 4	**R/W**	RGB_SYNC_RESO_X[7:0]								-
Parameter 5	**R/W**	RGB_SYNC_VBP[7:0]								-
Parameter 6	**R/W**	RGB_SYNC_HBP[7:0]								-

Description

This command is used to set RGB interface Related Setting.
BLK_OPT: TBD.

DEM: chose DE mode
0: external DE (DE mode)
1: internal DE (HV mode)

VSPL: Indicate the VSYNC active polarity
0: active low
1: active high

HSPL: Indicate the HSYNC active polarity
0: active low
1: active high

PCPL: Indicate the PCLK polarity
0: normal
1: reverse PCLK

DEPL: Indicate the DE polarity
0: normal
1: reverse DE

RGB_SEL[1:0]:
00: disable RGB IF
01: disable RGB IF
10: RGB 16b/18b
11: RGB 6b

RGB_SYNC_LN[7:0]: line setting for internal timing.
line = RGB_SYNC_LN[10:0]*2.

RGB_SYNC_RESO_X[7:0]: pixel setting for internal timing.
Pixel/line = RGB_SYNC_RESO_X[7:0]*4

RGB_SYNC_VBP[7:0]: VBP setting for internal DE generate.
RGB_SYNC_HBP[7:0]: HBP setting for internal DE generate.

Restriction

-

2.5.10.GAS_CTRL: GAS function control (Page0 - BEh)

CMD/PAs	R/W	D7	D6	D5	D4	D3	D2	D1	D0	HEX
Command	**R/W**	1	0	1	1	1	1	1	0	BE
Parameter 1	**R/W**	-	-	-	-	-	-	-	-	-
Parameter 2	**R/W**	-	-	GAS_SLPIN_EN	-	GAS_VCI_EN	GAS_IOVCC_EN	GAS_BLK_NUM[1:0]		-
Parameter 3	**R/W**	GAS_DBS_SEN	GAS_DBS_GEN	-	GAS_DBS_LTH[4:0]					-
Parameter 4	**R/W**	-	-	DC_GAS_VGH_EN	DC_GAS_VGL_EN	-	-	DC_GAS_MVZ_EN	-	-

Description

This command is used to set related setting while abnormal pwoer off cccurs.
GAS_SLPIN_EN: Enable SLPIN function On/Off during GAS occurs.
0: When GAS occurs, DDIC will keep blanking until all power off.
1: When GAS occurs, DDIC will excute SLPIN flow after blanking frame satisfy

GAS_VCI_EN: GAS function enable for VCI. (REG*SleepOut)
GAS_IOVCC_EN: GAS function enable for IOVCC. (REG*SleepOut)

GAS_BLK_NUM[1:0]:GAS sweep white frame number to sleep in.
Sweep white number = GAS_BLK_NUM[1:0]

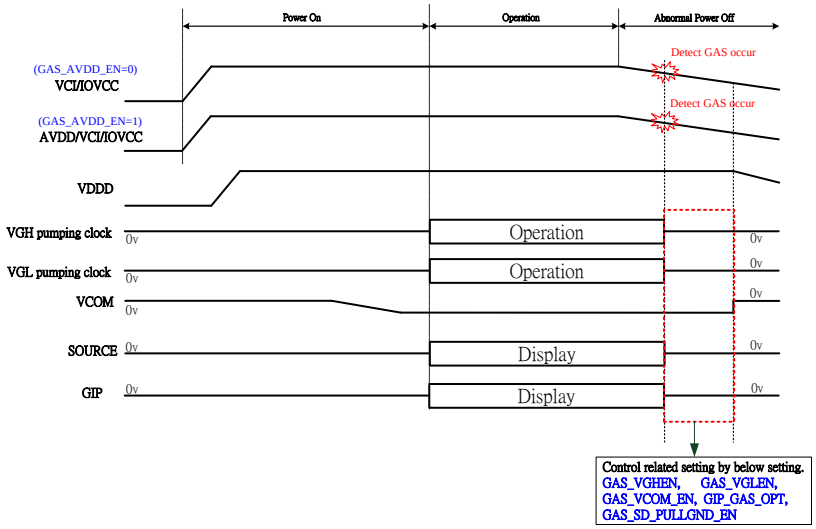

GAS_DBS_SEN:gas debounce for source tcon enable
GAS_DBS_GEN:gas debounce for gip enable
GAS_DBS_LTH[4:0]:gas debounce counter.
Debounce time = OSC period * 8 * GAS_DBS_LTH[5:0]

DC_GAS_VGH_EN: Enable VGH function at GAS
0: Disable
1: Enable – VGH pumping at GAS
DC_GAS_VGL_EN: Enable VGL function at GAS
0: Disable
1: Enable – VGL pumping at GAS
DC_GAS_MVZ_EN: Enable MVZ_D function at GAS
0: Disable
1: Enable – MVZ_D pumping at GAS

Restriction: -

2.5.11.SETSTBA: Set Source Output driving ability (Page0 - C0h)

CMD/Pas	R/W	D7	D6	D5	D4	D3	D2	D1	D0	HEX
Command	**R/W**	1	1	0	0	0	0	0	0	C0
Parameter 1	**R/W**	-	GAP[2:0]			SAP[3:0]				-
Parameter 2	**R/W**	GAP2 _EN	GAP2[2:0]			SAP2[3:0]				

Description

This command is used to set internal OTP program related setting.

GAP2_EN:enable GAP2 enable

.

GAP[2:0]:Set Gamma OP output driving ability.
GAP2[2:0]:Set Gamma OP output driving ability during idle mode

GAP[2:0]/ GAP2[2:0]	Bias current (uA)
000	1.79
001	3.12
010	4.31
011	5.43
100	6.5
101	7.54
110	8.55
111	9.54

SAP[3:0]: Set channel OP output driving ability of general pattern.
SAP2[3:0]: Set channel OP output driving ability for power saving

SAP[3:0]	Bias current (uA)	SAP[3:0]	Bias current (uA)
0000	0.4	1000	0.3
0001	0.75	1001	0.58
0010	1.1	1010	0.85
0011	1.44	1011	1.114
0100	1.78	1100	1.37
0101	2.11	1101	1.63
0110	2.45	1110	1.88
0111	2.75	1111	2.13

Restriction: -

2.5.12.SETPANEL: Set Panel relate register (Page0 - C1h)

CMD/Pas	R/W	D7	D6	D5	D4	D3	D2	D1	D0	HEX
Command	**R/W**	1	1	0	0	0	0	0	1	C1
Parameter 1	**R/W**	-	-	-	SS_PANEL	GS_PANEL	REV_PANEL	CFHR	-	-

Description

This command is used to panel related setting.

SS_Panel: Set Source scan output direction.

SS_Panel	S/D scan direction
0	S1 -> S240
1	S240-> S1

GS_Panel: Set Gate scan output direction.

GS_Panel	G/D scan direction
0	Top -> Bottom Scan (G1->G320)
1	Bottom -> Top Scan (G320 -> G1)

Note: Exmaple, resolution is 1080RGB x 1920.

REV_Panel: Set the display of the same data on both normally-white and normally-black panels.

REV_Panel	Panel (Normally-type)
0	Normal Black panel
1	Normal White panel

CFHR: Set color fliter horizontial alignment order.

CFHR	Horizontial color fliter alignment
0	<S1><S2> alignment to <R1><G1><B1><R2><G2><B2> alignment
1	<S1><S2> alignment to <B1><G1><R1><B2><G2><R2> alignment

Restriction: -

2.5.13.SET_BIST: BIST Pattern setting (Page0 - C2h)

CMD/PAs	R/W	D7	D6	D5	D4	D3	D2	D1	D0	HEX
Command	**R/W**	1	1	0	0	0	0	1	0	C2
Parameter 1	**R/W**	-	LNPERLVL[1:0]		-	TEST_ PAT_EN	TEST_PATTERN[2:0]			-

Description

This command is used to set internal BIST pattern selection.

TEST_PAT_EN: Enable BIST Pattern On/Off.
0: Disable (default)
1: Enable

LNPERLVL[1:0]: Number of lines of each gray level for V94
0: 1 line
1: 2 lines
2: 4 lines(default)
3: 8 lines

TEST_PATTERN[2:0]: Set which BIST pattern on display.

TEST_PATTERN[2:0]	Image	Description
0	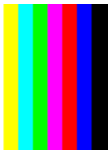	8 Color
1		Black
2		White
3		Red
4		Green
5		Blue
6:		V256 Gray which is evenly distributed in Y-direction
7		BGWB2 Outer border : Red； Inner border : Blue；Inside: Black

Restriction

-

2.5.14.SETRGBCYC: Set Display Waveform Cycles of RGB Mode (Page0 - C3h)

CMD_ADD	R/W	D7	D6	D5	D4	D3	D2	D1	D0	HEX
Command	**R/W**	1	1	0	0	0	0	1	1	C3
Parameter 1	**R/W**		RGB_INV_PI[1:0]		RGB_INV_I[1:0]		IDLE_TYPE	RGB_INV_NP[1:0]		
Parameter 2	**R/W**					RGB_GND[3:0]				
Parameter 3	**R/W**				RGB_EQ1[4:0]					
Parameter 4	**R/W**				RGB_EQ2[4:0]					
Parameter 5	**R/W**	RGB_CHGEN_OFF[1:0]		RGB_CHGEN_ON[5:0]						
Parameter 6	**R/W**	RGB_OFF[7:0]								
Parameter 7	**R/W**	GAOPOFF_1ST_OFF	GAOPOFF_POL	GAOPOFFEN	GAOPOFF[4:0]					
Parameter 8	**R/W**	GAP2_ON[3:0]				SAP2_ON[3:0]				

Description

This command is used to set internal SD output timing.

IDLE_TYPE:
0: (MSB,5'b0)
1: 6'b(MSB)

RGB_INV_NP[1:0]: Set source dot inversion type at normal or partial mode.
RGB_INV_PI[1:0]: Set source dot inversion type at (idle+partial) mode.
RGB_INV_I[1:0]: Set source dot inversion type at idle mode.

RGB_INV_NP[1:0] RGB_INV_PI[1:0] RGB_INV_I[1:0]	Dot inversion type
00	1-dot
01	2-dot
10	Column
11	inhibit

RGB_GND[3:0]: Set positive source output GND function.
RGB _EQ1[4:0]: Set negative SD EQ1 time.
RGB _EQ2[4:0]: Set negative SD EQ2 time.

RGB _GND[3:0] RGB _EQ1[4:0] RGB _EQ2[4:0]	Clock cycle
00h	0 timing clock
01h	1 timing clock
:	1 timing clock /step
1Eh	30 timing clock
1Fh	31 timing clock

Note: 1 timing clock = 8 multiple of Fosc.

RGB _CHGEN_ON[5:0]: Set SD OP output time.
RGB _CHGEN_OFF[7:0]: Set SD OP output time (after RGB_OFF).

RGB _CHGEN_OFF[7:0]	Clock cycle
00h	0 timing clock
01h	1 timing clock
:	1 timing clock /step
FEh	254 timing clock
FFh	255 timing clock

Note: 1 timing clock = 4 multiple of Fosc.

RGB _OFF[7:0]: Set SD data output time.

RGB _OFF[7:0]	Clock cycle
00h	0 timing clock
01h	1 timing clock
:	1 timing clock /step
FEh	254 timing clock
FFh	255 timing clock

Note: 1 timing clock = 4 multiple of Fosc.

GAOPOFF_1ST_OFF:
1:Enable
0:Disable

GAOPOFF_POL:
1:Enable
0:Disable

GAOPOFFEN:
1:Enable
0:Disable(GAOPOFF keeps low)

GAOPOFF [4:0]: Set GAMMA OP OFF time.
GAP2_ON[3:0]: setting Gamma OP output driving ability near gate off.
SAP2_ON[3:0]: setting channel OP output driving ability near gate off.

GAOPOFF[4:0] GAP2_ON[4:0] SAP2_ON[4:0]	Clock cycle
00h	0 timing clock
01h	1 timing clock
:	1 timing clock /step
1Eh	30 timing clock
1Fh	31 timing clock

Note: 1 timing clock = 8 multiple of Fosc.

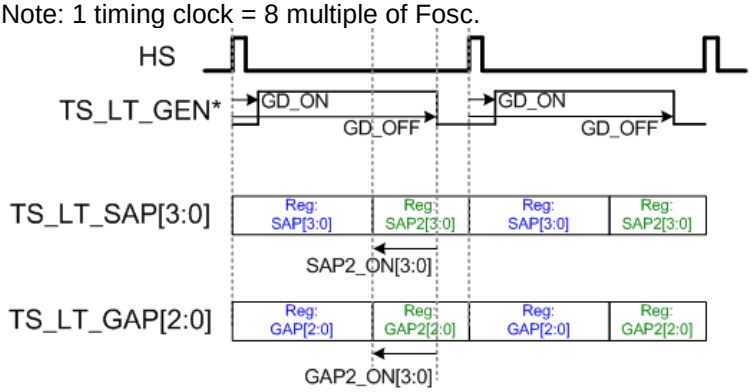

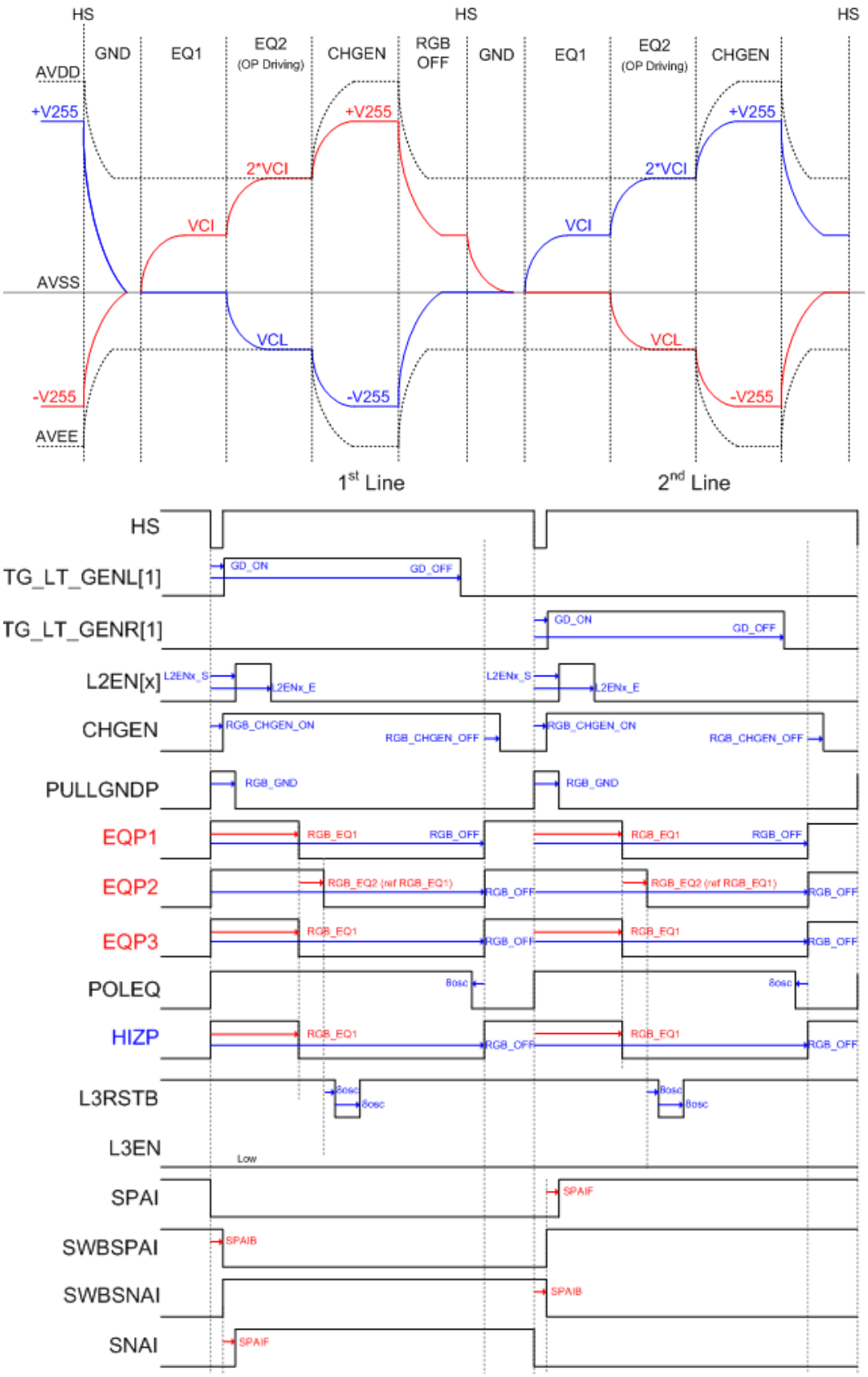

Note:

1. L2EN high pulse needs to be covered by PULLGND high pulse when changing polarity.
2. If sets RGB_EQ*=00, EQ pulse will keep low.

Restriction	-

2.5.15.SET TCON: Timing control setting (Page0 - C4h)

CMD/PAs	R/W	D7	D6	D5	D4	D3	D2	D1	D0	HEX
Command	**R/W**	1	1	0	0	0	1	0	0	C4
Parameter 1	**R/W**	-	-	-	-	VBFP_RATIO[1:0]		TE_OPT[1:0]		-
Parameter 2	**R/W**	-	TE_DELAY[6:0]							-
Parameter 3	**R/W**	LN[7:0]								-
Parameter 4	**R/W**	SLT_NP[7:0]								-
Parameter 5	**R/W**	-	VFP_NP[6:0]							-
Parameter 6	**R/W**	-	VBP_NP[6:0]							-
Parameter 7	**R/W**	-	HBP_NP[6:0]							-
Parameter 8	**R/W**	SLT_I[7:0]								-
Parameter 9	**R/W**	-	VFP_I[6:0]							-
Parameter 10	**R/W**	-	VBP_I[6:0]							-
Parameter 11	**R/W**	-	HBP_I[6:0]							-
Parameter 12	**R/W**	HBP_NCK[3:0]				HFP_NCK[3:0]				-

Description

This command is used to set timing control.

TE_OPT[0]:
1'b0: Enable TE during V-blanking.
1'b1: Disable TE during V-blanking at odd frames.
TE_OPT[1]:
1'b0: Normal TE.
1'b1: Fram_cnt[0], i.e., output 1'b1 at odd frames.

TE_Delay[6:0]: TE delay setting

TE_Delay[6:0]								Gate Line
0	0	0	0	0	0	0	0	4
0	0	0	0	0	0	0	1	8
-	-	-	-	-	-	-	-	4 line / step
0	1	0	1	0	0	0	0	320

LN[7:0]: Sets the gate line number to drive LCD panel. The number of lines must be equal or more than the gate line number of LCD panel. Gate line number = LN*2.

LN[7:0]								Gate Line
0	0	0	0	0	0	0	0	0
0	0	0	0	0	0	0	1	2
-	-	-	-	-	-	-	-	2 line / step
1	0	1	0	0	0	0	0	320

SLT_xx[7:0]: Sets the scan line time width. (4 x OSC) CLK / step

STL_xx[7:0]								Scan Line time(OSC CLK)
0	0	0	0	0	0	0	0	Inhibit
0	0	0	0	0	0	0	1	(4x OSC) CLK
0	0	0	0	0	0	1	0	(8 x OSC) CLK
0	0	0		0	0	1	1	(12 x OSC) CLK
-	-	-	-	-	-	-	-	(4 x OSC) CLK / step
1	1	1	1	1	1	0	1	(1012 x OSC) CLK
1	1	1	1	1	1	1	0	(1016 x OSC) CLK
1	1	1	1	1	1	1	1	(1020 x OSC) CLK

Note: fosc = 10MHz.

VBP_xx[6:0]: Vertical back porch number setting.
VFP_xx[6:0]: Vertical front porch number setting.
HBP_xx[6:0]: Horizontal back porch number setting.(for DPI sync mode)

VBP_xx[6:0] VFP_xx[6:0] HBP_xx[6:0]	Number of VBP/ VFP(line) HBP(dot clock)
8h’00	Inhibit
8h’01	1
8h’02	2
:	:
8h’7E	126
8h’7F	127

Note: VBP = External (VS + VBP) -1 line. VFP = External VFP line.
XXX_NP[6:0]: for normal+partial mode
XXX_I[6:0]: for idle mode

VBFP_RATIO [1:0]: VFP and VBP ratio

RGB_INV_NP[1:0]	ratio
00	x1
01	x2
10	x4
11	inhibit

HFP_NCK[3:0]: Defined the number of HFP in the internal time.
HBP_NCK[3:0]: Defined the number of HBP in the internal time.

Restriction	-

2.5.16.SET_R_GAMMA: Set Red Gamma output voltage(Page0 - C8h)

CMD/Pas	R/W	D7	D6	D5	D4	D3	D2	D1	D0	HEX
Command	**R/W**	1	1	0	0	1	0	0	0	C8
Parameter 1	**R/W**	-	RPA15[5:0]							-
Parameter 2	**R/W**	-	RPA14[5:0]							-
Parameter 3	**R/W**	-	RPA13[5:0]							-
Parameter 4	**R/W**	-	RPA12[5:0]							-
Parameter 5	**R/W**	-	RPA11[5:0]							-
Parameter 6	**R/W**	-	RPA10[5:0]							-
Parameter 7	**R/W**	-	RPA9[5:0]							-
Parameter 8	**R/W**	-	RPA8[5:0]							-
Parameter 9	**R/W**	-	RPA7[5:0]							-
Parameter 10	**R/W**	-	RPA6[5:0]							-
Parameter 11	**R/W**	-	RPA5[5:0]							-
Parameter 12	**R/W**	-	RPA4[5:0]							-
Parameter 13	**R/W**	-	RPA3[5:0]							-
Parameter 14	**R/W**	-	RPA2[5:0]							-
Parameter 15	**R/W**	-	RPA1[5:0]							-
Parameter 16	**R/W**	-	RPA0[5:0]							-
Parameter 17	**R/W**	-	RNA15[5:0]							-
Parameter 18	**R/W**	-	RNA14[5:0]							-
Parameter 19	**R/W**	-	RNA13[5:0]							-
Parameter 20	**R/W**	-	RNA12[5:0]							-
Parameter 21	**R/W**	-	RNA11[5:0]							-
Parameter 22	**R/W**	-	RNA10[5:0]							-
Parameter 23	**R/W**	-	RNA9[5:0]							-
Parameter 24	**R/W**	-	RNA8[5:0]							-
Parameter 25	**R/W**	-	RNA7[5:0]							-
Parameter 26	**R/W**	-	RNA6[5:0]							-
Parameter 27	**R/W**	-	RNA5[5:0]							-
Parameter 28	**R/W**	-	RNA4[5:0]							-
Parameter 29	**R/W**	-	RNA3[5:0]							-
Parameter 30	**R/W**	-	RNA2[5:0]							-
Parameter 31	**R/W**	-	RNA1[5:0]							-
Parameter 32	**R/W**	-	RNA0[5:0]							-
Description	This command is used to set postive /neagative volatge of source output.									

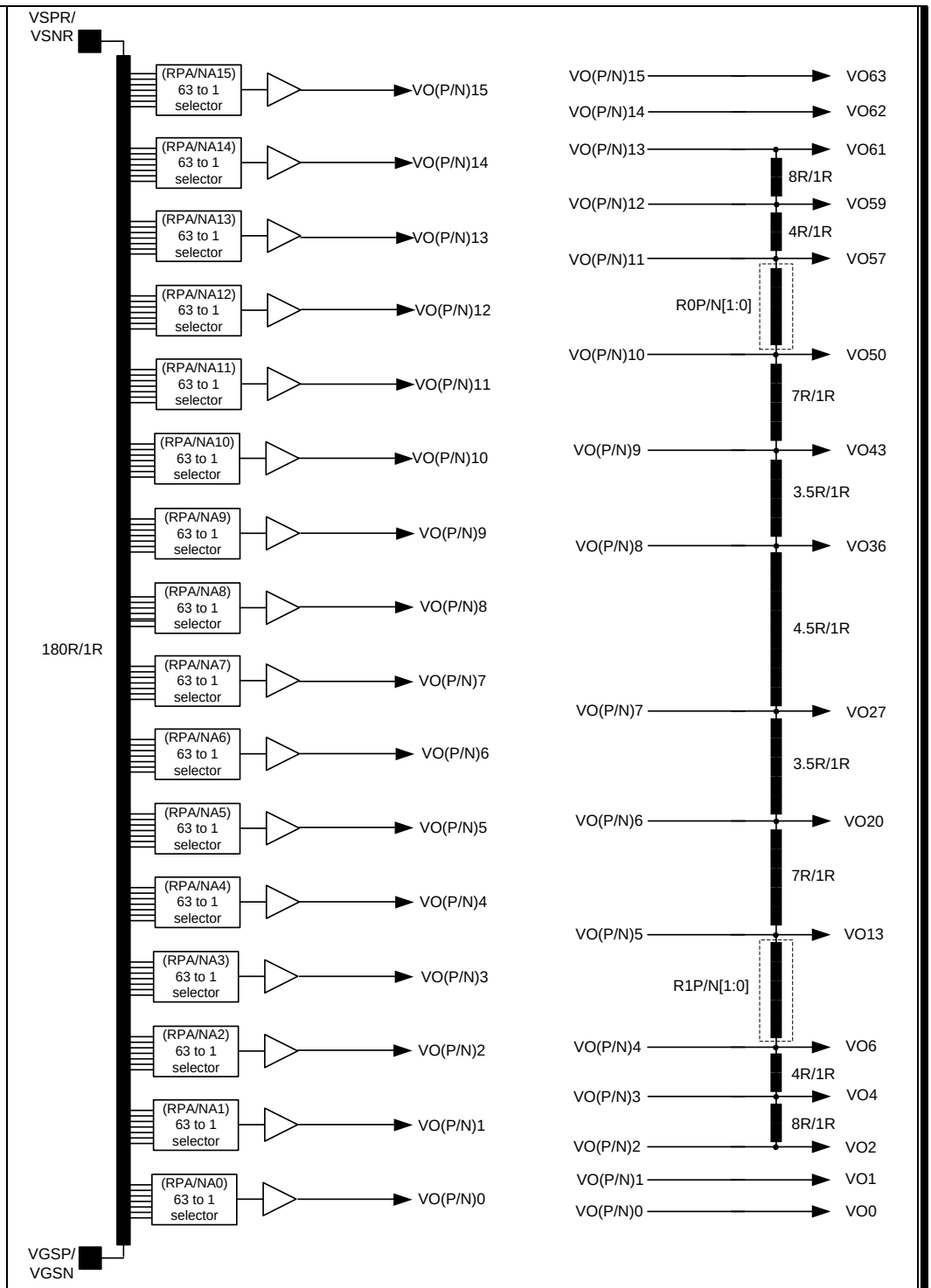

Restriction	-

2.5.17.IF_OPTION: Interface Optiopn (Page0-CEh)

CMD/PAs	R/W	D7	D6	D5	D4	D3	D2	D1	D0	HEX
Command	**R/W**	1	1	0	0	1	1	1	0	CE
Parameter 1	**R/W**	-	IF_OPTION[6:0]							6A
Parameter 2	**R/W**	-	QSPI_SDO_TYPE[1:0]-		-	STD_RD_DCX_LOW_EN	STD_CSX_LOW_EN	RGB666_TYPE	RGB_BIT_REV	00
Parameter 3	**R/W**	--	--	LN_2B_WR_EN	MV_2A2B_LN_EN	DPI_STOP_SOL_EN	DUMMY_0B_03_EN	DB_OE_9B_OPT	DB_OE_OPT	04

Description

IF_OPTION[6:0]:
IF_OPTION[6]:for dsi FF, FE command
0:disable
1:enable
IF_OPTION[5]:for spi w command afer 2c bug
0:disable
1:enable
IF_OPTION[4]:for 2a2b auto change
0:enable
1:disable
IF_OPTION[3]:select ic internal csx source
1 :with delay
0: from OPTION[2]
IF_OPTION[2] :
1:csx always keep low
0:keep input csx
IF_OPTION[1]:for 2c insert command
0:disable
1:enable

QSPI_SDO_TYPE[1:0]:

QSPI_SDO_TYPE = 2'b11/2'b00 (default)			QSPI_SDO_TYPE = 2'b10		QSPI_SDO_TYPE = 2' b01	
QSPI						
	CASE1		CASE2		CASE3	
	W	R	W	R	W	R
SDA(in/out)	input	output	input	input	input	input
SDO(out)	HiZ	HiZ	HiZ	output	HiZ	HiZ
DB[0](in/out)	input	input	input	input	input	output

STD_RD_DCX_LOW_EN: when read standard command
1. : allow DCX to low
0. : must be high

分析

目前的設計 參考下表
原因: CSX/DCX 需要其中一個是正確的, 才能讓設計訊息完整

CSX	DCX	設計狀況	備註
Toggle	Toggle	支援	
Keep0	Toggle	支援	必須設定 STD_CSX_LOW_EN=1
Toggle	Keep 0	支援	必須設定 STD_RD_DCX_LOW_EN=1
Keep 0	Keep 0	不支援	

STD_CSX_LOW_EN: support csx always keep low when read/write standard command
1. : allow csx keep low
0. : csx must toggle

RGB666_TYPE: only for QSPI 1A1D(1 Lane address、1 Lane Data) and RGB 666 Format
0:Loosely

1	2	3
R5	G5	B5
R4	G4	B4
R3	G3	B3
R2	G2	B2
R1	G1	B1
R0	G0	B0
0	0	0
0	0	0

1: non-Loosely

1	2	3
R5	G3	B1
R4	G2	B0
R3	G1	R5
R2	G0	R4
R1	B5	R3
R0	B4	R2
G5	B3	R1
G4	B2	R0

RGB_BIT_REV: RGB data MSB/LSB reversal only for QSPI RGB 666 format

LN_2B_WR_EN : updage 2B index when LN[7:0] changed
0: disable
1: enable

MV_2A2B_LN_EN: RAM boundry
0: fix 240x320
1: follow LN

DPI_STOP_SOL_EN:reserved

DUMMY_0B_03_EN:

- DUMMY_0B_03 _EN = 1 (default) => 0x0B + dummy ; 0x03+No dummy

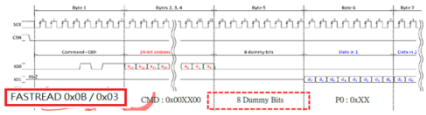

- DUMMY_0B_03 _EN = 0 => 0x0B + No dummy ; 0x03+ dummy

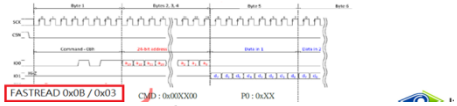

DB_OE_9B_OPT: reserved

DB_OE_OPT: reserved

Restriction	-

2.5.18.SET_GIP_L: SET CGOUTx_L Signal Mapping, GS_Panel=0 (Page0-D0h)

CMD/PAs	R/W	D7	D6	D5	D4	D3	D2	D1	D0	HEX
Command	**R/W**	1	1	0	1	0	0	0	0	D0
Parameter 1	**R/W**	-	-	-	-	-	GD_GAS_GATE_CLK	-	GD_LRSW	-
Parameter 2	**R/W**	-	-	GD_ON[5:0]						-
Parameter 3	**R/W**	GD_OFF[7:0]								-
Parameter 4	**R/W**	-	-		GD_EQ_PTR0[4:0]					-
Parameter 5	**R/W**	-	-	-	GD_EQ_PTR1[4:0]					-
Description	This command sets GIP CGOUTx_L signal mapping when XOR(GS_Panel, GS)=0. GD_GAS_GATE_CLK // 0: not gating clock in gas (default) // 1: gating clock in gas GD_LRSW gate driver L/R switch // 0: gate driver L (default) // 1: gate driver R GD_ON[5:0] gate driver on (Time unit = osc*4) GD_OFF[7:0] gate driver off (Time unit = osc*4) GD_EQ_PTR0[5:0] gate driver EQ0 pulse width(Time unit = osc*4) EQ0 end point = gate driver on + EQ0 pulse wodth GD_EQ_PTR1[7:0] gate driver EQ1 pulse width(Time unit = osc*4) EQ1 start point = gate driver off - EQ1 pulse wodth									
Restriction	-									

2.5.19.ABE_CTRL: (Page0-D3h)

CMD/PAs	R/W	D7	D6	D5	D4	D3	D2	D1	D0	HEX
Command	**R/W**	1	1	0	1	0	0	1	1	DD
Parameter 1	**R/W**		ABE_EN	ABE_DIM_EN	LE_ABE_BASE[4:0]					-
Parameter 2	**R/W**	ABE_DIM_FPS[3:0]				-	COLENG_SP_V0_EN	COLENG_SP_V63_EN	-	-
Parameter 3	**R/W**	ABE_GATING_EN[7:0]								-
Description	This command is use to repair OTP value **ABE_EN:** ABE function switch. 0: ABE off 1: ABE on **LE_ABE_BASE[4:0]:** ABE base **ABE_DIM_EN:** for ABE_Base diming. 0: disable 1: enable **ABE_DIM_FPS[3:0]:** ABE_Dimming FPS. **ABE_GATING_EN[7:0]:** for LE clk gating. **COLENG_SP_V0_EN:** V0_SP detection switch. **COLENG_SP_V63_EN:** V63_SP detection switch.									
Restriction	-									

2.5.20.OTP_REPAIR: (Page0-D6h)

CMD/PAs	R/W	D7	D6	D5	D4	D3	D2	D1	D0	HEX
Command	**R/W**	1	1	0	1	0	1	1	0	D6
Parameter 1	**R/W**	-	-	-	-	-	-	REPAIR_PAGE[1:0]		-
Parameter 2	**R/W**	REPAIR_INDEX[7:0]								-
Parameter 3	**R/W**	REPAIR_PAR[7:0]								-
Parameter 4	**R/W**	REPAIR_VALUE[7:0]								-
Description	This command is use to repair OTP value **REPAIR_PAGE[1:0]:** Fix register page. **REPAIR_INDEX[7:0]:** Fix register index. **REPAIR_PAR[7:0]:** Fix register parameter. **REPAIR_VALUE[7:0]:** Fix register value.									
Restriction	-									

2.5.21.RAMCTRL (Page0 - D7h)

CMD/Pas	R/W	D7	D6	D5	D4	D3	D2	D1	D0	HEX
Command	**R/W**	1	1	0	1	0	1	1	1	D7
Parameter 1	**R/W**	-	CR_OPTION	SPI_2LAN_EN	RP	RM	MLBIT_INV	DM[1:0]		-
Parameter 2	**R/W**	SCL_PL	EXT_VS_PL	EPF[1:0]		ENDIAN[1:0]		MDT[1:0]		-

Description

This command is use to set interface related setting.

SPI_2LAN_EN: Enable SPI 2 data lane when IM[3:0]=0101.

RP : Enable DPI data path.

0:disble

1:enable

RM : select data path for GRAM

1:data from DPI/DSI

0:data from 2C/3C command

MLBIT_INV: RGB data MSB/LSB reversal(only for MCU Interface RGB565,except QSPI)

DM[1:0]: select contol timing and display data path

DM[1:0]	Control Timing	Display Data Path
00	internal vs, hs ,de	GRAM
01	external vs(hardware pin)	GRAM
10	external vs(video vs)	GRAM
11	external vs ,hs, de(video mode)	DPI

SCL_PL: Indicate the HSYNC active polarity

0:normal

1:reverse PCLK

EXT_VS_PL: Indicate the HSYNC active polarity

0:active

1:active

CR_OPTION: for data mapping

EPF[1:0]: 16bits to 18 bits data mapping

EPF	CR_OPTION	565																	
2'b00	1'b0	R5	R4	R3	R2	R1	1'b0	G6	G5	G4	G3	G2	G1	B5	B4	B3	B2	B1	1'b0
	1'b1	1	1	1	1	1	1'b1	1	1	1	1	1	1	1	1	1	1	1	1'b1
	1'b1	R5	R4	R3	R2	R1	1'b0	G6	G5	G4	G3	G2	G1	B5	B4	B3	B2	B1	1'b0
2'b01	1'b0	R5	R4	R3	R2	R1	1'b1	G6	G5	G4	G3	G2	G1	B5	B4	B3	B2	B1	1'b1
	1'b1	0	0	0	0	0	1'b0	G6	G5	G4	G3	G2	G1	0	0	0	0	0	1'b0
	1'b1	R5	R4	R3	R2	R1	1'b1	G6	G5	G4	G3	G2	G1	B5	B4	B3	B2	B1	1'b1
2'b10	1'b0	R5	R4	R3	R2	R1	R5	G6	G5	G4	G3	G2	G1	B5	B4	B3	B2	B1	B5
	1'b1	R5	R4	R3	R2	R1	R5	G6	G5	G4	G3	G2	G1	B5	B4	B3	B2	B1	B5
2'b11	1'b0	R5	R4	R3	R2	R1	G1	G6	G5	G4	G3	G2	G1	B5	B4	B3	B2	B1	G1
	1'b1	R5	R4	R3	R2	R1	G1	G6	G5	G4	G3	G2	G1	B5	B4	B3	B2	B1	G1

ENDIAN: only for 8/9bit DBIB in 565

0:normal(MSB first)

1:little Endian(LSB first)

MDT[1:0]: select display data mapping for parallel interface.

Restriction

-

2.5.22.AUTO_DISP_SETTING (Page0 - D8h)

CMD/PAs	R/W	D7	D6	D5	D4	D3	D2	D1	D0	HEX
Command	**R/W**	1	1	0	1	1	0	0	0	D8
Parameter 1	**R/W**	-	-	-	-	GON	DTE	DISP[1:0]		-
Parameter 2	**R/W**	-	-	DISP_SW_OPT [1:0]		-	BLK_DISABLE	BLK_MODE [1:0]		-

Description

This command is used to set display sequence Related Setting.

DISP[1:0]: Source output setting.

DISP1	DISP0	Internal Display Operations	Source Output
0	0	Halt	VSSD
0	1	Inhibit	Inhibit
1	0	Operate	V255
1	1	Operate	Display

DTE, GON: Gate / SD output setting.

GON	Gate Output
0	VGL
1	VGH/VGL

DTE	SD Output
0	Off (Hi-Z)
1	ON

BLK_DISABLE: Control blanking frame is displayed after SLPOUT/SLPIN.
1: No blanking frame is displayed.
0: 2blanking frame are displayed. (default)

BLK_MODE[1:0]: When BLK_DISABLE=0,

BLK_MODE [1:0]	Blank mode
00	Turn off blanking after 2 blanking frame
01	Keep blanking after 2 blanking frames
Others	Inhibit

DISP_SW_OPT[1:0]: Define status of DISP[1:0] after SW reset command receivered.

Restriction	-

2.5.23.OTP_PROG: OTP Program (Page0 - D9h)

CMD/PAs	R/W	D7	D6	D5	D4	D3	D2	D1	D0	HEX
Command	**R/W**	1	1	0	1	1	0	0	1	D9
Parameter 1	**R/W**	OTP_INDEX[6:0]								-
Parameter 2	**R/W**	-	-	-	OTP_READ_SINGLE	OTP_WRITE_SINGLE	OTP_LOAD_DISABLE	OTP_INT_VPP	OTP_AUTO_PROG	-
Parameter 3	**R**	OTP_RDATA[7:0]								
Parameter 4	**R/W**	OTP_WDATA[7:0]								-
Parameter 5	**R/W**	-	-	-	-	-	OTP_RLD_PTM[1:0]		-	-
Parameter 6	**R/W**	OTP_PPROG	OTP_VPP_SEL	OTP_PRD	OTP_PWE	-	-	OTP_PTM[1:0]		-
Description	**OTP_INDEX[6:0] :** Set index of OTP table for programming. **OTP_PGM_SEL:** **OTP_INT_VPP:** Select VPP voltage from external or internal. 0: VPP voltage from external power supply. (VPP pad) (default) 1: VPP voltage from internal power supply (VGH). **OTP_LOAD_DISABLE:** Auto reload OTP value. 0: Enable auto reload OTP value after SLPOUT command send. (default) 1: Disable auto reload OTP value after SLPOUT command send. **OTP_AUTO_PROG:** When set to 1, the register content of OTP index is programmed. Following description is for OTP manual mode. (Not release to customer) **OTP_WRITE_SINGLE:** For 1 byte OTP programing only.(Not release to customer) 0: Disable. (default) 1: Enable. EX: set MASK[7:0], INDEX[9:0] ,WDATA[7:0] and WRITE_SINGLE=1 first then set AUTO_PROG=1, the WDATA will write to INDEX. **OTP_ READ_SINGLE:** Read 1 byte OTP value. 0: Disable. (default) 1: Enable. EX: set INDEX[9:0], READ_SINGLE=1 and AUTO_PROG=1, then read OTP_RDATA[7:0] **OTP_ RDATA [7:0]:** Read back the OTP index data. (Not release to customer) **OTP_WDATA[7:0]:** Set OTP data for programming when OTP_WRITE_SINGLE=1. **OTP_RLD_PTM[1:0]:** for margin read. **OTP_PPROG:** Pin for program mode enabling. **OTP_VPP_SEL:** High voltage power supply for programming. **OTP_PRD:** Pin to define read cycle. **OTP_PWE:** Pin to define program cycle. **OTP_PTM[1:0]:** Pins for test mode enabling.									
Restriction	-									

2.5.24.SET_WD: Setup watch dog (Page0 - DDh)

CMD/PAs	R/W	D7	D6	D5	D4	D3	D2	D1	D0	HEX
Command	**R/W**	1	1	0	1	1	1	0	1	DD
Parameter 1	**R/W**	-	WD_OFF	WD_MODE[1:0]		FBLK_EN	WD_CLK_SEL[2:0]			-
Parameter 2	**R/W**	WD_Timer[7:0]								-
Parameter 3	**R/W**						ESD_TCON_OPT	ESD_SD_OPT	ESD_PRT_EN	-
Parameter 4	**R**	-					-	WD_FMS	WD_FBLK	-

Description

WD_MODE[1:0]: Watch dog mode select.

WD_MODE[1:0]		WD Alarm start	WD Alarm stop
0	0	Inhibit	Inhibit
0	1	Inhibit	Inhibit
1	0	Display off	Display on
1	1	Inhibit	Inhibit

WD_OFF: Control watch dog function on/off while externl video singal was disappear.
0: Enable watch dog function. (default)
1: Disable watch dog function.

WD_CLK_SEL[2:0]: Set base clock frequency of watch dog.

WD_CLK_SEL[2:0]	WDosc (us)
000	0.5us
001	1us
010	2us
011	4us
100	8us

WD_Timer[7:0]: Set watch dog timer. When external HSYNC stop, watch dog timer start to count. Send alarm signal to watch dog if timer counting value is the same as WD_Timer[7:0] setting. When HSYNC resume, alarm signal is stoped.

WD_Timer[7:0]	Time to alarm (ms)
0x00	0 x WDosc(Inhibit)
0x01	1 x WDosc
…	1 WDosc / step
0xFE	254 x WDosc
0xFF	255 x WDosc

Total duration to activate WD_Alarm = WD_TIMER[7:0]*Time Unit*4

WD_FMS: Force Mode Switch when WDT occurs(not release)
WD_FBLK: Force Blanking when WDT or Hwreset occurs(not release)

ESD_SD_OPT: Define the source reaction while ESD
0:Floating
1:Keep the original data

ESD_TCON_OPT:
1:If ESD happened in A line the display data will stop updating a frame. It will update new display data on next frame A+1 line.
0:IF ESD happened in A line the display data of A+1 line will same as A line.

Restriction: -

2.5.25.SET_PAGE(Page0 - DEh)

CMD/PAs	R/W	D7	D6	D5	D4	D3	D2	D1	D0	HEX
Command	**R/W**	1	1	0	1	1	1	1	0	DE
Parameter 1	**R/W**	-	-	-	-	-	-	PAGE[1:0]		-
Description	This command is used to change page. **PAGE[1:0]:** Register page select.									
Restriction	-									

2.5.26.SET_PASSWD: (Page0 - DFh)

CMD/PAs	R/W	D7	D6	D5	D4	D3	D2	D1	D0	HEX
Command	**R/W**	1	1	0	1	1	1	1	1	DF
Parameter 1	**R/W**	PASSWD1[7:0]								-
Parameter 2	**R/W**	PASSWD2[7:0]								-
Description	This command is used to set password to access inhouse register. Normal mode:									

{PASSWD1, PASSWD2, PASSWD3}	Description
{98h, 53h }	Standard & All inhouse CMD access
{5Ah, A5h }	Enable STD CMD and P0, P1 Registers
{09h, B1h}	Enter ESD protection mode
Others	Standard CMD access (default)

Restriction	-

2.5.27.SETECO: ECO used(Page0 - E6h)

CMD/PAs	R/W	D7	D6	D5	D4	D3	D2	D1	D0	HEX
Command	**R/W**	1	1	1	0	0	1	1	0	E6
Parameter 1	**R/W**		ECO0[6:0]							-

Description

This command is used to set ECO for internal test.

ECO0[0]: for uP turn on SPI_2LAN_EN option
0:disable
1:enable

ECO0[1]: for std 0x37 vsp option
0: 不卡bound
1: 卡bound

ECO0[2]: for pwr pumping clock change to soft start settings option
0:disable
1:enable

ECO0[3]:
1 : When disp_sync = 2 or 3 , TS_LT_BIASEN and TS_LT_GABIAS_EN keep high
0 : When disp_sync = 1 , TS_LT_BIASEN and TS_LT_GABIAS_EN keep high

Other bits are reserve.

Restriction	-

2.5.28. GETIDVER: Get ID Version (Page0 - E7h)

CMD/PAs	R/W	D7	D6	D5	D4	D3	D2	D1	D0	HEX
Command	**R/W**	1	1	1	0	0	1	1	1	E7
Parameter 1	**R**	JD_ID1[7:0]								-
Parameter 2	**R**	JD_ID2[7:0]								-
Parameter 3	**R**	JD_ID3[7:0]								-
Parameter 4	**R/W**	JD_ID_PASSWD1[7:0]								-
Parameter 5	**R**	JD_ID1_INHOUSE[2:0]			JD_ID2_INHOUSE[4:0]					-

Description

JD_ID1[7:0]: 0x91 IC production number.
JD_ID2[7:0]: 0x62. IC production number.
JD_ID3[7:0]: IC Version

//Below description is for internal used only. (Not release to customer)
JD_ID_PASSWS1[7:0]: The PASSWORD is 0xB4
JD_ID1_INHOUSE[2:0]: Internal IC version MSB chart

JD_ID1_INHOUSE[2:0]	MSB Chart
000	Inhibit
001	A
010	B
011	C
100	D
101	E
110	F
111	G

JD_ID2_ INHOUSE[4:0]: Internal IC version LSB chart

JD_ID2_INHOUSE[2:0]	MSB Chart
0_0000	Inhibit
0_0001	A
0_0010	B
0_0011	C
…	…
1_1000	X
1_1001	Y
1_1010	Z

Restriction: -

2.5.29.UP_START_CTRL: Micro process control (Page0 - E8h)

CMD/PAs	R/W	D7	D6	D5	D4	D3	D2	D1	D0	HEX
Command	**R/W**	1	1	1	0	1	0	0	0	E8
Parameter 1	**R/W**	UP_KEY1[7:0]								-
Parameter 2	**R/W**	UP_START_EN[7:0]								-
Parameter 3	**R/W**	PWR_KEY[7:0]								-
Description	**UP_KEY1[7:0]:** This command is used to enter OTP program mode. Before OTP programming, setting UP_KEY1=5Ah and UP_KEY2=A5h first. Otherwise OTP programming will fail. UP_KEY1[7:0] — Description 0x5Ah — OTP control by up 0x55h — OTP control directly 0x3F — ROM BIST Following description is for OTP manual mode. (Not release to customer) **UP_START_EN[7:0]:** Set 0xAF to to disable up. **UP_START_EN[7:0]:** Set 0xAA to enable direct power on flwo control by RBCh of page2.									
Restriction	-									

2.5.30.SETID: Set ID (Page0 - E9h)

CMD/PAs	R/W	D7	D6	D5	D4	D3	D2	D1	D0	HEX
Command	**R/W**	1	1	1	0	1	0	0	1	E9
Parameter 1	**R**	-	-	-	-	-	-	-	-	-
Parameter 2	**R/W**	ID1[7:0]								-
Parameter 3	**R/W**	ID2[7:0]								-
Parameter 4	**R/W**	ID3[7:0]								-
Parameter 5	**R/W**	ID4[7:0]								-
Parameter 6	**R**	-	-	-	-	-	-	ID_OTP_ TIMES[1:0]		-
Description	**ID1[7:0]:** This is used to set ID1 and read value from DAh. **ID2[7:0]:** This is used to set ID2 and read value from DBh. **ID3[7:0]:** This is used to set ID3 and read value from DCh. **ID4[7:0]:** This is used to set ID4. **ID_OTP_TIMES [1:0]:** Read the OTP program times of ID. (Not release to customer) 0: No valid SETID in OTP, use register default value. 1: SETID is programmed once in OTP. Reload 1st valid one. 2: SETID is programmed 2 times in OTP. Reload 2th valid one.									
Restriction	-									

2.5.31.SELF_DIAG: UP debug used (Page0 - F0h)

CMD/PAs	R/W	D7	D6	D5	D4	D3	D2	D1	D0	HEX
Command	**R/W**	1	1	1	1	0	0	0	0	F0
Parameter 1	**R**	regload _detec	func_de tec	attach_ detec	gbreak_ detec	-	-	-	-	-
Description	This command is used to debug for UP function.									
Restriction	-									

2.5.32.SPI CMD: Set SPI command index (Page0 - F1h)

CMD/PAs	R/W	D7	D6	D5	D4	D3	D2	D1	D0	HEX
Command	**R/W**	1	1	1	1	0	0	0	1	F1
Parameter 1	**R/W**	SPI_CMD_INDEX[7:0]								-
Description	This command is used to set SPI command index. **SPI_CMD_INDEX[7:0]:** SET SPI READ Command Address for Jadard Command.									
Restriction	-									

2.5.33.SPI DATA: Get SPI data (Page0 - F2h)

CMD/PAs	R/W	D7	D6	D5	D4	D3	D2	D1	D0	HEX
Command	**R/W**	1	1	1	1	0	0	1	0	F2
Parameter 1	**R**	SPI_CMD_DATA1[7:0]								-
:	**:**	**:**								-
Parameter n	**R**	SPI_CMD_DATAn[7:0]								-
Description	This command is used to get SPI command data. **SPI_CMD_DATA[7:0]:** GET SPI READ Command data for Jadard Command.									
Restriction	-									

2.5.34.F5_CMD: Get standard command R44h value (Page0 - F5h)

CMD/PAs	R/W	D7	D6	D5	D4	D3	D2	D1	D0	HEX
Command	**R/W**	1	1	1	1	0	1	0	1	F5
Parameter 1	**R**	-	-	-	-	-	-	-	TELINE[8]	-
Parameter 2	**R**	TELINE[7:0]								-
Parameter 3	**R**	-	-	-	-	-	-	-	SC[8]	-
Parameter 4	**R**	SC[7:0]								-
Parameter 5	**R**	-	-	-	-	-	-	-	EC[8]	-
Parameter 6	**R**	EC[7:0]								
Parameter 7	**R**	-	-	-	-	-	-	-	SP[8]	-
Parameter 8	**R**	SP[7:0]								
Parameter 9	**R**	-	-	-	-	-	-	-	EP[8]	-
Parameter 10	**R**	EP[7:0]								
Parameter 11	**R**	-	-	-	-	-	-	-	SR[8]	-
Parameter 12	**R**	SR[7:0]								
Parameter 13	**R**	-	-	-	-	-	-	-	ER[8]	-
Parameter 14	**R**	ER[7:0]								
Parameter 15	**R**	-	-	-	-	-	-	-	TFA[8]	-
Parameter 16	**R**	TFA[7:0]								
Parameter 17	**R**	-	-	-	-	-	-	-	VSA[8]	-
Parameter 18	**R**	VSA[7:0]								
Parameter 19	**R**	-	-	-	-	-	-	-	BFA[8]	-
Parameter 20	**R**	BFA7:0]								
Parameter 21	**R**	-	-	-	-	-	-	-	VSP[8]	-
Parameter 22	**R**	VSP[7:0]								
Description	This command is used to get value of standard command. **TELINE[15:0]:** The value is the smae as R44h setting.									
Restriction	-									

2.5.35.UP_STATUS1: UP check status1(Page0 - F8h)

CMD/PAs	R/W	D7	D6	D5	D4	D3	D2	D1	D0	HEX
Command	**R/W**	1	1	1	1	1	0	0	0	F8
Parameter 1	**R**	UP_STA1[7:0]								-
Description	This command is used to check internal status by UP. **UP_STA1[7:0]:** reversed.									
Restriction	-									

2.5.36.UP_STATUS2: UP check status2(Page0 - F9h)

CMD/PAs	R/W	D7	D6	D5	D4	D3	D2	D1	D0	HEX
Command	**R/W**	1	1	1	1	1	0	0	1	F9
Parameter 1	**R**	UP_STA2[7:0]								-
Description	This command is used to check internal status by UP. **UP_STA2[7:0]:** reversed.									
Restriction	-									

2.5.37.UP_STATUS3: UP check status3(Page0 - FAh)

CMD/PAs	R/W	D7	D6	D5	D4	D3	D2	D1	D0	HEX
Command	**R/W**	1	1	1	1	1	0	1	0	FA
Parameter 1	**R**	UP_STA3[7:0]								-
Description	This command is used to check internal status by UP. **UP_STA3[7:0]:** reversed.									
Restriction	-									

2.5.38.UP_STATUS4: UP check status4(Page0 - FBh)

CMD/PAs	R/W	D7	D6	D5	D4	D3	D2	D1	D0	HEX
Command	**R/W**	1	1	1	1	1	0	1	1	FB
Parameter 1	**R**	UP_STA4[7:0]								-
Description	This command is used to check internal status by UP. **UP_STA4[7:0]:** reversed.									
Restriction	-									

2.6. Jadard page 1 command Description

2.6.1. POWER_OPT: Power engineer test mode register (Page1 - B2h)

CMD/PAs	R/W	D7	D6	D5	D4	D3	D2	D1	D0	HEX
Command	**R/W**	1	0	1	1	0	0	1	0	B2
Parameter 1	**R/W**	-	PDS[14:8]							-
Parameter 2	**R/W**	PDS[7:0]								-

Description

This command is used to set power engineer test mdoe.

PDS[30:0]: Set power engineer test mdoe relaetd setting.

Name	Default	Descreption
PDS[14]	0	ITU[3] tune OP_VGMS bias current of VGMP; 0: bias=2uA, 1: bias=4uA
PDS[13]	0	ITU[2] tune OP_VGMS bias current of VGSP; 0: bias=2uA, 1: bias=4uA
PDS[12]	1	ITU[1] tune OP_VGMS bias current of VGSN; 0: bias=2uA, 1: bias=4uA
PDS[11]	0	ITU[0] tune OP_VGMS_N bias current of VGMN; 0: bias=2uA, 1: bias=4uA
PDS[10]	0	1: increase VGMP & VGMN compensation cap
PDS[9]	1	no use
PDS[8]	1	no use
PDS[7]	1	SD bias current MSB
PDS[6]	0	SD bias current LSB: PDS[7:6]=11=IB_SD[4]~[0]=5uA, =10: IB_SD[x]=4uA, =01: =3uA
PDS[5]	1	1: turn on VDDD_P boost function
PDS[4]	0	0: only turn on VDDD_IOVCC regulator when (COMBO_OSC_EN + POW_EN) & EN_VDDD_IOVCC; 1: add DSI-LP VDDD driving, when LP_OR_HS_EN=1, turn on VDDD_IOVCC regulator, (COMBO_OSC_EN + POW_EN + (LP_OR_HS_EN & PDS[8])) & EN_VDDD_IOVCC
PDS[3]	0	1:DCDC HV Bias=8uA
PDS[2]	0	1:DCDC MV Bias=8uA
PDS[1]	1	0: VREF_1D8V_BUF[1] (for DPHY_TOP, VDDD_SLPO) connect to VREF_IN directly, VREF_1D8V_BUF[1] off 1:OP_VREF_BUF on when SLP-OUT
PDS[0]	0	0: VDDD_IN connect to VDDD pad (net name VDDD_IO)

Restriction

-

2.6.2. POWER_TEST: Set Power control (Page1 - B4h)

CMD/PAs	R/W	D7	D6	D5	D4	D3	D2	D1	D0	HEX
Command	**R/W**	1	0	1	1	0	1	0	0	B4
Parameter 1	**R/W**	-	-	-	-	-	-	-	SFT_CONT_EN	-
Description	This command is used to shifter regsiter operation of internal register setting. **SFT_CONT_EN:** Set shifter register operation mode. 0: Internal shifter register operation will sync. with SLPOUT command or VSYNC. 1: Internal shifter register operation will always transfer continuously.									
Restriction	-									

2.6.3. OTP_ESD_SET: Auto reload OTP function(Page1 - B5h)

CMD/PAs	R/W	D7	D6	D5	D4	D3	D2	D1	D0	HEX
Command	**R/W**	1	0	1	1	0	1	0	1	B5
Parameter 1	**R/W**	ESD_FRM_CNT_EN[7:0]								-
Parameter 2	**R/W**	ESD_FRM_CNT[7:0]								-
Description	This command is used to set AUTO relaod OTP during ESD test. **ESD_FRM_CNT_EN[7:0]:** Use special password to enable OTP reload function. Except Set ESD_FRM_CNT_EN[7:0]=0x5A to enable, others will be disable. **ESD_FRM_CNT[7:0]:** Count interval time of OTP reload by frame counter.									
Restriction	-									

2.6.4. DCDC_OPT: DCDC design setting (Page1 - B7h)

CMD/Pas	R/W	D7	D6	D5	D4	D3	D2	D1	D0	HEX
Command	**R/W**	1	0	1	1	0	1	1	1	B7
Parameter 1	**R/W**	-	MVZ_NOPS	-	-	DCDC_EQ1_EXT[6:0]				-
Parameter 2	**R/W**	-	HVZ_NOPS	-	HVZ_DISCH	-	-	EQ1_EN	EQ2_EN	-
Parameter 3	**R/W**	MV_CLKGT_EN	VGLZ_CLKGT_EN	VGHZ_CLKGT_EN	DCDC_CLK_S[4:0]					-
Parameter 4	**R/W**	MV_G_CLKGT_EN	DCDC_CLK_E[6:0]							
Parameter 5	**R/W**	-	DCDC_EQ1_EXT[6:0]							

Description

This register is use to set internal DC/DC charge pumping mode.

MVZ_NOPS: Set non-overlap time between CLKP and CLKN for MVZ.
HVZ_NOPS: Set non-overlap time between CLKP and CLKN for VGHZ/VGLZ.

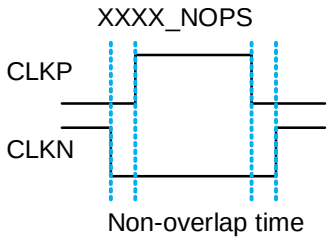

XXX_NOPS	MVZ (MVZ_S/MVZ_G) MVZ_D/NMVZ_D	VGHZ	VGLZ
0	Default	Default	Default
1	+50%	+50%	+50%

HVZ_DISCH: Enable VGLZ discharge function at power off flow.

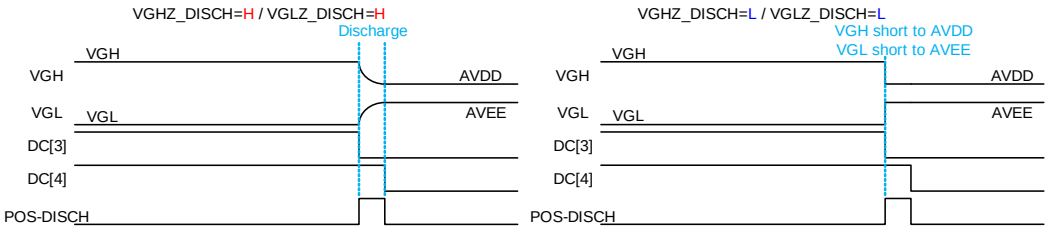

EQ1_EN: EQ1 enable
EQ2_EN: EQ2 enable

MV_CLKGT_EN: MVZ_S clock gating function.
MV_G_CLKGT_EN: MVZ_G clock gating function
VGLZ_CLKGT_EN: VGLZ clock gating function.
VGHZ_CLKGT_EN: VGhZ clock gating function.
DCDC_CLK_S[4:0]: pumping clock gating control
DCDC_CLK_E[6:0]: pumping clock gating control

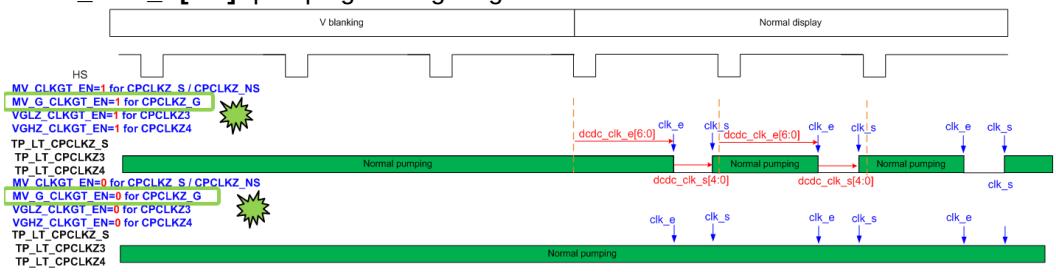

DCDC_EQ1_EXT[6:0]:

- GNDP/N:換極性to GND.
- EQP1: +V0→VCI; EQN1:-V0→GND.
- EQP2/EQN2 : AVDD=VCIPX2 ; AVEE=VCL

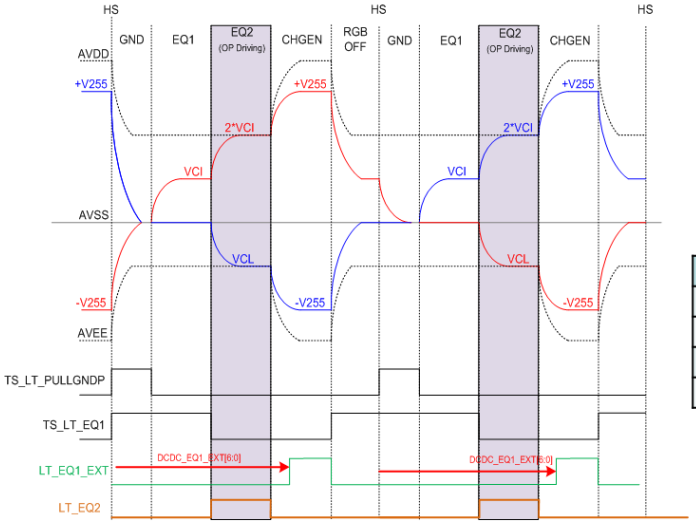

EQ2 region : VCIPX2/VCL full pump

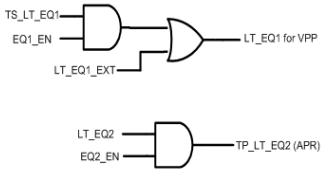

	EQ1_EXT[6:0]
BIT	7
Number	0-127
Time step	OSC/8
Period	0~101.6us

Restriction	-

2.6.5. SET_GPO: General Purpose Output setting(Page1 - BBh)

CMD/Pas	R/W	D7	D6	D5	D4	D3	D2	D1	D0	HEX
Command	**R/W**	1	0	1	1	1	0	1	1	BB
Parameter 1	**R/W**	-	TE_REV	-	-	TE_SEL[3:0]				-
Parameter 2	**R/W**	-	GPO0_REV	GPO0_OE	-	GPO0_SEL[3:0]				-
Parameter 3	**R/W**	-	GPO1_REV	GPO1_OE	-	GPO1_SEL[3:0]				
Parameter 4	**R/W**	INTERNAL_SEL2[3:0]				INTERNAL_SEL1[3:0]				-

Description

This command is used to set general purpose output state.

TE_REV: Enable TE output reversed.
GPO0_REV: Enable GPO0 output reversed.
GPO1_REV: Enable GPO1 output reversed.

XXX_REV	Output state
0	Normal output
1	Reverse output

GPO0_OE: Enable GPO0 output.
GPO1_OE: Enable GPO1 output.

XX_OE	Output On/Off
0	Off (Hi-Z)
1	On

XXX_SEL[4:0]: Select output type on TE pad.

TE_x_SEL[4:0]	Output type
0h	GND
1h	TCON__TE_OUT
2h	0
3h	0
4h	TCON__TE_OUT& (~REGT__cs_cmpr_mix)
5h	int_vs1
6h	int_hs1
7h	int_de1
8h	DBG__signal[0]
9h	DBG__signal[1]
Ah	DBG__signal[2]
Bh	DBG__signal[3]
Ch	DBG__signal[4]
Dh	DBG__signal[5]
Eh	DBG__signal[6]
Fh	DBG__signal[7]

INTERNAL_SELx[3:0]: Switch internal signal at TE_X_SEL[4:0]=0x13h, 0x14h, 0x15h, 0x16h, 0x17h, 0x18h

INTERNAL_SELx[3:0]	INT_VS1	INT_HS1	INT_DE1
0h	0	0	0
1h	RGBMX__VS	RGBMX__HS	RGBMX__DE
2h	LE__vsync_o	LE__hsync_o	LE__de_o
3h	0	cs_cmpr_mix	CPU__up_start
4h	0	0	0
5h	PREMX__RAM_VS	PREMX__RAM_PCLK	PREMX__RAM_DE
6h	PREMX__VS	PREMX__HS	PREMX__DE
7h	TCON__isc_vsync	TCON__isc_hsync	TCON__isc_de
8h	sram__vsync	sram__hsync	sram__de
9h	TCON__DM_sync[0]	TCON__DM_sync[1]	0
Ah	TO_LT_OTP_PPROG	TO_LT_OTP_PWE	TP_LT_OTP_VPP_SEL
Bh	IFC__if_index_2e	IFC__if2ram_r_clk	IFC__if2ram_rde

	Ch	MIPID__2c3c_vs	MIPID__2c3c_pclk	MIPID__2c3c_de
	Dh	TS_LTL_GASHORT	TS_LT_GAOPOFF	TP_LT_EQ2
	Eh	TP_LT_EQ3	TCON__PWR_FM_CTRL	TCON__PWR_LN_CTRL
	Fh	DISP_sync[0]	DISP_sync[1]	REGS__dte_sample
Restriction	-			

2.6.6. PWR_SEQ_ACCESS: power sequence control (Page1 - BCh)

CMD/Pas	R/W	D7	D6	D5	D4	D3	D2	D1	D0	HEX
Command	**R/W**	1	0	1	1	1	1	0	0	BC
Parameter 1	**R/W**	-	-	PWR_POS_DISCH	PWR_POW_EN	-	-	-	PWR_SOFT	-
Parameter 2	**R/W**	PWR_DC[7:0]								-
Description	This command is used to set manual power on flow when up disbaled. **Below control methos is base on UP off** **PWR_POS_DISH**: Control internal POS_DISCH pin. **PWR_POW_EN**: Control internal POW_EN pin. **PWR_SOFT**: Control internal PWR_SOFT pin. **PWR_DC[7:0]**: Control internal DC[7:0] pin. • Power-on Sequence Flow 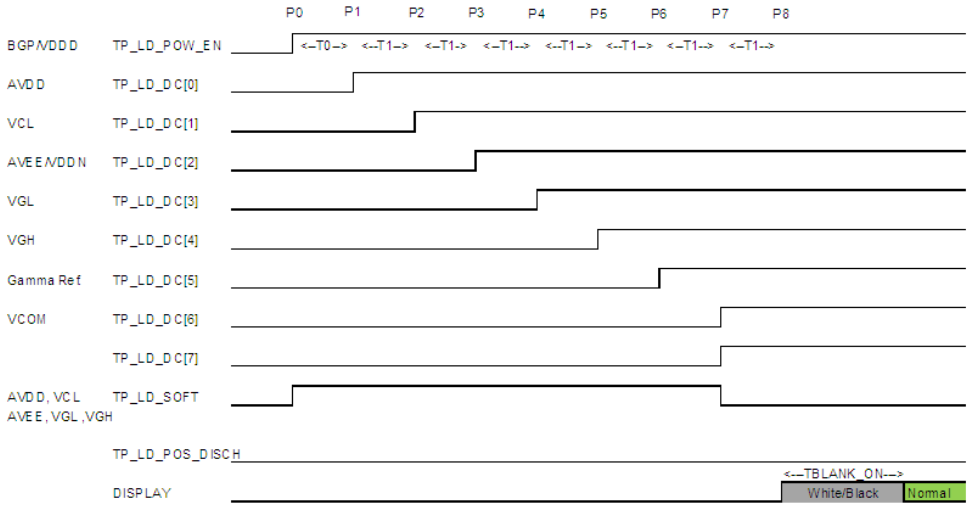 									
Restriction	-									

2.6.7. PWR_SEQ_ACCESS_RD: power sequence control read (Page1 - BDh)

CMD/Pas	R/W	D7	D6	D5	D4	D3	D2	D1	D0	HEX
Command	**R/W**	1	0	1	1	1	1	0	1	BD
Parameter 1	**R**	-	-	UP_POS_DISCH	UP_POW_EN	-	-	-	UP_SOFT	-
Parameter 2	**R**	UP_DC[7:0]								-
Description	This command is used to read manual power on flow when up disbaled. **Below control methos is base on UP on** **UP_POS_DISH**: Check state of internal POS_DISCH pin by UP. **UP_POW_EN**: Check state of internal POW_EN pin by UP. **UP_SOFT**: Check state of internal SOFT Pin by UP. **UP_DC[7:0]**: Check state of internal DC[7:0] pin by UP.									
Restriction	-									

2.6.8. GAMMA_POWER_TEST: Set GAMMA power related setting (Page1 - BEh)

CMD/PAs	R/W	D7	D6	D5	D4	D3	D2	D1	D0	HEX
Command	**R/W**	1	0	1	1	1	1	1	0	BE
Parameter 1	**R/W**	-	-	-	-	VGMP_TEST	VGSP_TEST	VGSN_TEST	VGMN_TEST	-
Description	This command is used to set GAMMA power voltage related setting (used to Gamma shift voltage). **VGMP_TEST:** output VGMP_S[6:0] to VGMP circuit when VGMP_TEST=1. **VGSP_TEST:** output VGSP_S[6:0] to VGMP circuit when VGSP_TEST=1. **VGSN_TEST:** output VGSN_S[6:0] to VGMP circuit when VGSN_TEST=1. **VGMN_TEST:** output VGMN_S[6:0] to VGMP circuit when VGMN_TEST=1. When xxxx_TEST=0 VGMP_S1[6:0] = VGMP_S[6:0] + VCOM_S[6:0] VGSP_S1[6:0]= VCOM_S[6:0] + VGSP_S[6:0] - OffsetP(0Bh) VGMN_S1[6:0] = VGMN_S[6:0] - VCOM_S[6:0] VGSN_S1[6:0]=VCOM_S[6:0] – VGSN_S[6:0]– OffsetP(0Bh)									
Restriction	-									

2.6.9. SETRGBCYC2: Set RGB IF source switch control timing (Page1 - C1h)

CMD/PAs	R/W	D7	D6	D5	D4	D3	D2	D1	D0	HEX
Command	R/W	1	1	0	0	0	0	0	1	C1
Parameter 1	R/W	-	SDPRDUM	SDDUM[1:0]		SDSW[1:0]		SDPORCH[1:0]		-
Parameter 2	R/W	-	WB_V0_PGND_SKIP_EN	WB_POL_KEEP_V63_EN	WB_POL_KEEP_V0_EN	RGB_SPAIF[1:0]		RGB_SPAIB[1:0]		-
Parameter 4	R/W	WB_FLAG_G63	WB_SD_V0_FLAG	SDSW_GAS[1:0]		DUM_CHGEN_ON	DUM_GAOPOFF_ON	SDPARTIAL[1:0]		-

Description

This command is used to set SD relaetd control timing.

SDPORCH[1:0]: Set SD output at blanking area.
SDSW[1:0]: Set SD output at sweep white case.
SDSW_GAS[1:0]: Set SD output during abnormal power off.
SDPARTIAL[1:0]: Set SD output for partial display.

SDPORCH[1:0]/ SDSW [1:0]/ SDSW_GAS [1:0]/ SDPARTIAL[1:0]	SD Output
00	PullGND
01	V0
10	V255
11	Hi-Z

SDPRDUM: Enable SD pre-dummy line function.
0:indicates normal display lines
1:indicates add one dummy display lines

SDDUM[1:0]: Set SD output at dummy display line.

SDDUM[1:0]	SD Output
00	PullGND
01	V0
10	V255
11	EQ Level

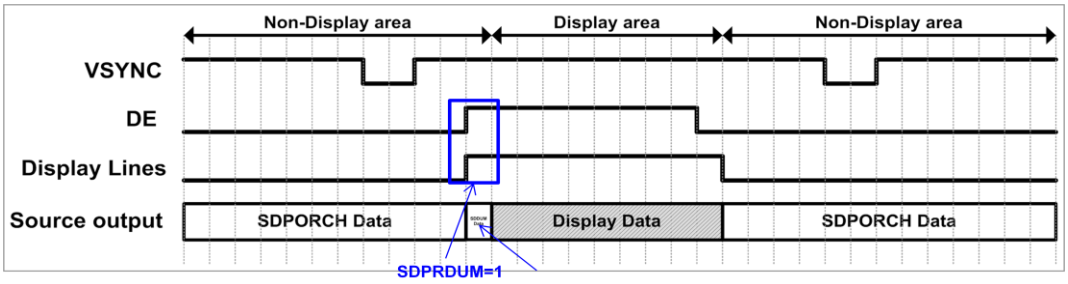

WB_V0_PGND_SKIP_EN: for power reducing

WB_POL_KEEP_V63_EN: set TCON polarity at special pattern
WB_POL_KEEP_V0_EN: set TCON polarity at special pattern

WB_POL_KEEP_V0_EN	WB_POL_KEEP_V63_EN	Function
0	0	POL keep function disable, Source normal operation
0	1	POL keep function enable only at IP_V63_FLAG=1
1	0	POL keep function enable only at IP_V0_FLAG=1
1	1	POL keep function enable at IP_V0_FLAG or IP_V63_FLAG=1

WB_FLAG_G63:

WB_FLAG_G63 (Reg)	TS_LT_G63
1	TS_LT_G63=1 @ TCON_SP_FLAG1=1
0	TS_LT_G63=normal operation

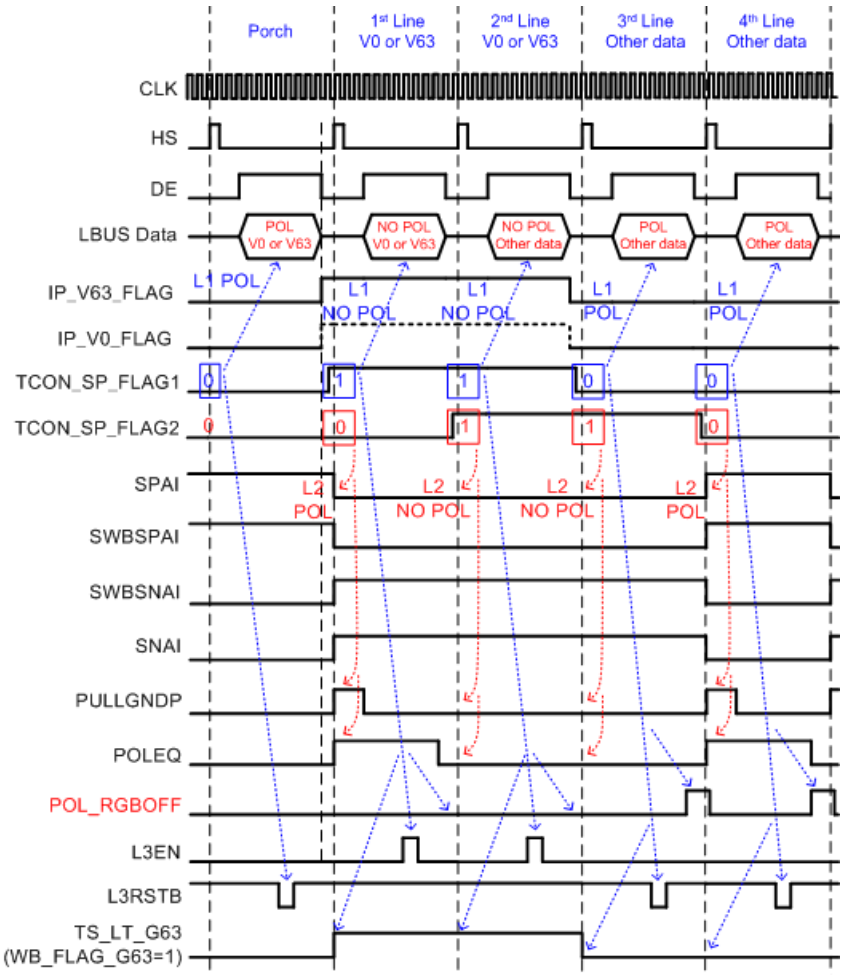

WB_SD_V0_FLAG:

WB_SD_V0_FLAG (REG)	TS_LT_V0_FLAG
0	Don't care TCON_V0_FLAG TS_LT_V0_FLAG keep low
1	If TCON_V0_FLAG=1 ➔ TS_LT_V0_FLAG=1 (Line base and align HS)

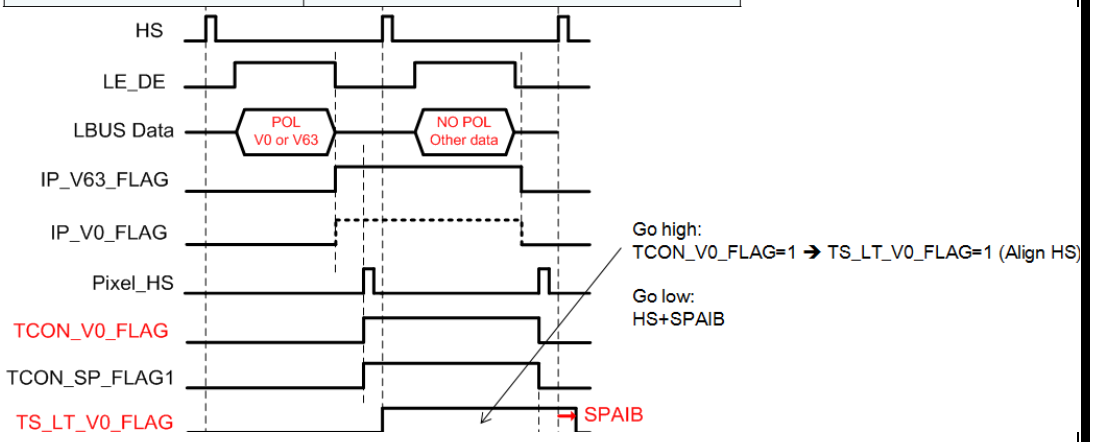

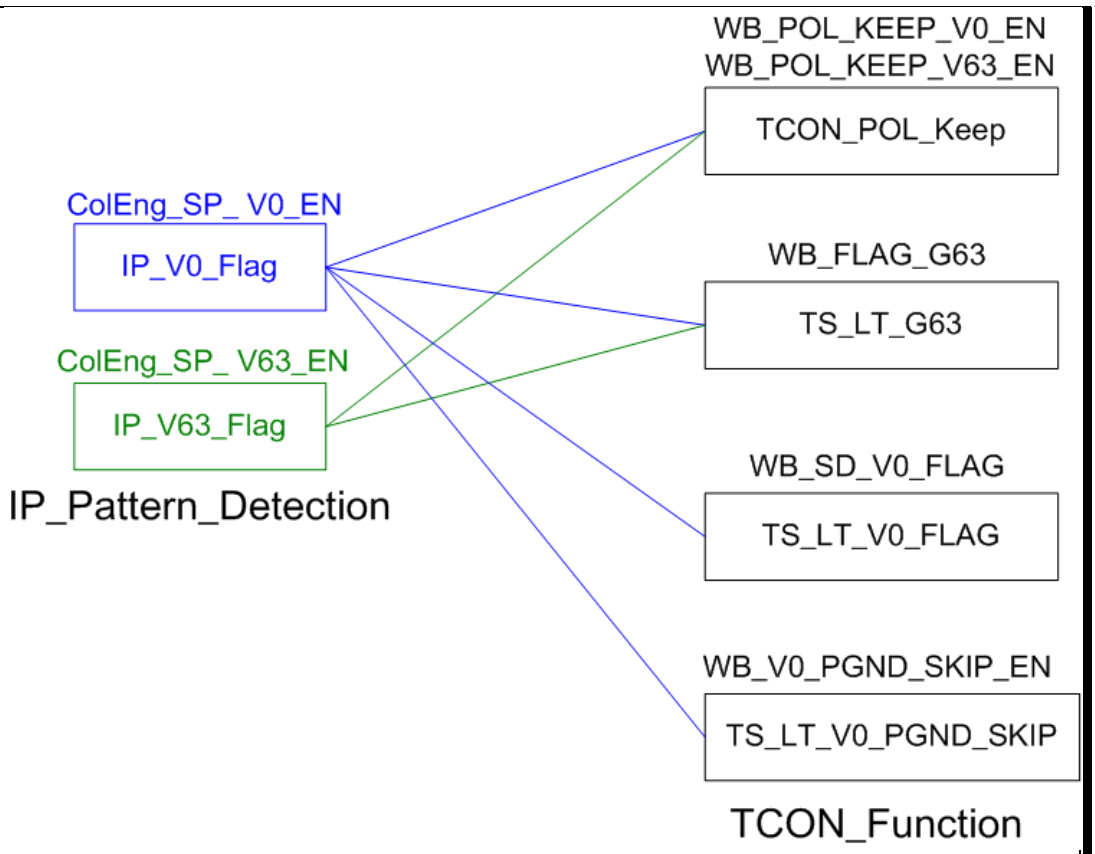

Below parameters are setting shift time between SWBSPAI and SPAI for channel OP polarity control timing.

RGB_SPAIF[1:0]: Set rising edge delay time of SPA to SWBSPAI rising edge.
RGB_SPAIB[1:0]: Set falling edge shift time of SPA to SWBSPAI falling edge.

RGB_SPAIF [1:0] RGB_SPAIB [1:0]	Clock cycle
0h	0*OSC/8
1h	1*OSC/8
2h	2*OSC/8
3h	3*OSC/8

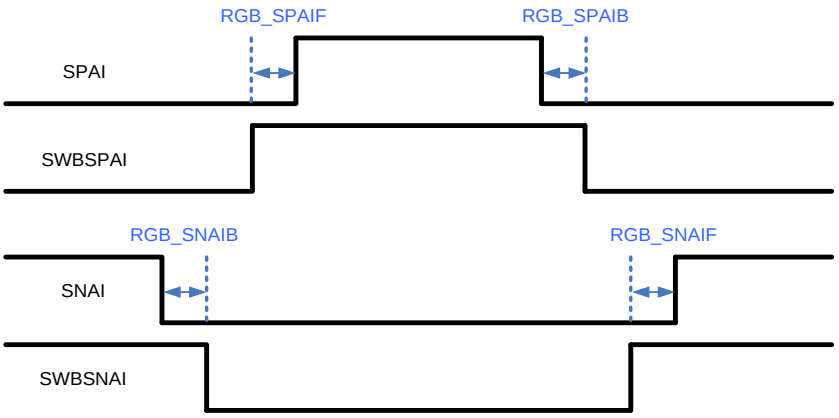

Restriction	-

2.6.10.SETSTBA2: Set internal source option control (Page1 - C2h)

CMD/PAs	R/W	D7	D6	D5	D4	D3	D2	D1	D0	HEX
Command	**R/W**	1	1	0	0	0	0	1	0	C2
Parameter 1	**R/W**	-	-	-	-	SDT[3:0]				-
Parameter 2	**R/W**	SDS[15:8]								-
Parameter 3	**R/W**	SDS[7:0]								-

Description

This command is used to set internal source option control at engineer mode .

SDT[6:0]: Set source related logic control timing.

Name	Default	Description
SDT[3]	1	CHGEN not gating by register “CHGEN_OFF”. (1=CHGEN keep high)
SDT[2]	00	Sleep in swbspai swbsnai option 0: sleep in swbspai=0 swbsnai=0 1: sleep in swbspai=1 swbsnai=1
SDT[1:0]	00	Gamma OP chopper setting

SDT[1:0]	GOPM-function
00	TS_LT*_OPM=0
01	TS_LT*_OPM=1
10	TS_LT*_OPM=F1→F2→F3→F4
11	TS_LT*_OPM=F1→F4→F3→F2

SDS[15:0]: Set source related logic control timing.

Name	default	Description
SDS[0]	1	EQ at polarity change. (0=disable)
SDS[3:1]	011	Channel op bias ratio setting
SDS[4]	1	EQ ignore MSB. (1=ignore)
SDS[5]	1	CHGEN on by TCON control. (0=always off)
SDS[6]	1	Chopper clamp release timing for channel op
SDS[7]	1	CHOPPER enable
SDS[8]	0	POL_RGBOFF function enable
SDS[9]	1	EQ compare option.(0=MSB; 1=MSB&condition)
SDS[10]	0	Positive source EQ1 behavior 0: Power=VCI2X, output EQ to VCI 1: Power=VCI, source driving output to data
SDS[12:11]	00	Positive V0 line power selection order 00: Normal operation 01/11: V0 line power select to VCI 10: V0 line power select to VCI2X
SDS[13]	0	Negative V0 line power selection order 0: Normal operation 1: V0 line power select to VCL
SDS[14]	0	V0/V63 line chopper enable (suitable for WB_POL_KEEP_V0/63_EN=1)
SDS[15]	0	Gamma OP power selection 0: Follow Source OP power selection 1: Tie to VCI3X, VCL2X

Restriction	-

2.6.11.SETTCON_OPT: (Page1 - C3h)

CMD/PAs	R/W	D7	D6	D5	D4	D3	D2	D1	D0	HEX
Command	**R/W**	1	1	0	0	0	0	1	1	C3
Parameter 1	**R/W**	-	-	-	-	GAS_PULLGND_OPT	TE_GATING_OPT	EQS_OFF_OPT	DISLEARNVBP	-
Parameter 2	**R/W**	-	-	-	LCLK_PARK_STA	PWR_TC_CLK_OFF	PWR_SD_OFF	DISP2TO3_OPT	DISP2TO3_EN	-
Parameter 3	**R/W**	L2EN_STR_OPT	STPLUSE_E[2:0]			-	-	STPLUSE_S[1:0]		-
Parameter 4	**R/W**	L3EN_E[3:0]				L3EN_S[3:0]				-
Parameter 5	**R/W**	L2EN_OFFSET[7:0]								-
Parameter 6	**R/W**	L2EN0_E[3:0]				L2EN0_S[3:0]				-
Parameter 7	**R/W**	L2EN1_E[3:0]				L2EN1_S[3:0]				-
Parameter 8	**R/W**	L2EN2_E[3:0]				L2EN2_S[3:0]				-
Parameter 9	**R/W**	L2EN3_E[3:0]				L2EN3_S[3:0]				-
Parameter 10	**R/W**	L2EN_STR[7:0]								-

Description

This command is used to set TCON option used.

GAS_PULLGND_OPT
0: non-PULLGND
1: PULLGND

TE_GATING_OPT
0 : assertion @ Endpoint of source driver
1 : assertion @ Hsync

EQS_OFF_OPT
0 : turn-on
1 : turn-off

DISLEARNVBP
0 : enable
1 : disable

LCLK_PARK_STA
0 : LCLK parking low at blanking
1 : LCLK parking high at blanking

PWR_TC_CLK_OFF
0 : TCON clock on
1 : TCON clock off

PWR_SD_OFF
0 : latch 2 EN on
1 : latch 2 EN off

DISP2TO3_EN
0 : display on immediately
1 : display on after RAM update

DISP2TO3_OPT
0 : check RAM update once
1 : check RAM update every time

L2EN_STR_OPT
0: reference RGB_OFF
1: reference L2EN_STR[7:0]

	L2EN_OFFSET[7:0]: offset for L2EN. **STPLUSE_S[1:0]**: STPULSE signal rising edge timing adjust **STPLUSE_E[1:0]**: STPULSE signal falling edge timing adjust 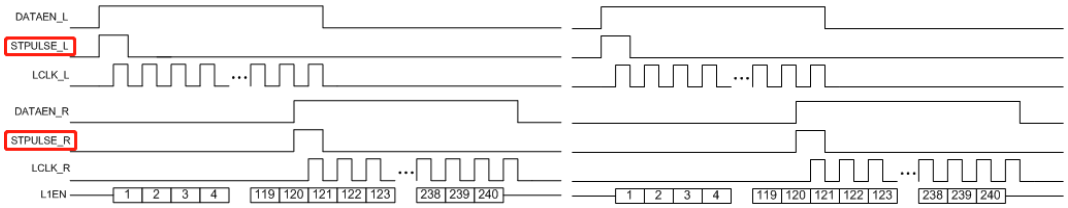 **L2ENx_S[3:0]**: L2ENx signal rising edge timing adjust **L2ENx_F[3:0]**: L2ENx signal falling edge timing adjust **L3EN_S[3:0]**: L3EN signal rising edge timing adjust **L3EN_F[3:0]**: L3EN signal falling edge timing adjust 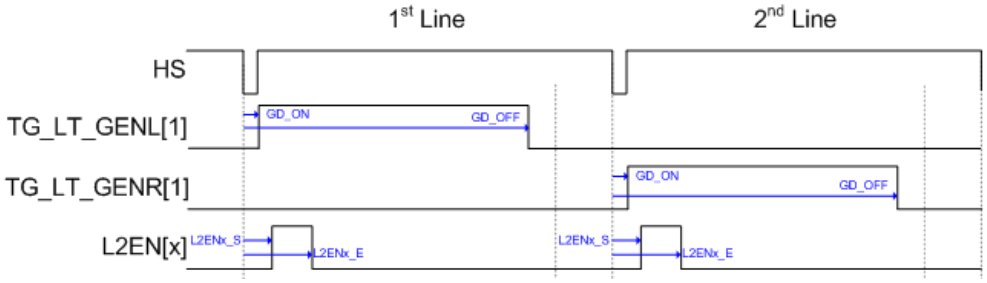
Restriction	-

2.6.12.SET_GAMMA_OP: Set Gamma OP related setting (Page1 - C4h)

CMD/PAs	R/W	D7	D6	D5	D4	D3	D2	D1	D0	HEX
Command	**R/W**	1	1	0	0	0	1	0	0	C4
Parameter 1	**R/W**	-	GAOP ENN	GAOP ENC	GAOP ENP	R1P[1:0]		R0P[1:0]		-
Parameter 2	**R/W**	-	-	-	GAOP_ CLAMP	R1N[1:0]		R0N[1:0]		-

Description

This command is used to set Gamma OP on/off and input range.

GAOPENP: Control Gamma OP15 output enable On/Off.
GAOPENC: Control Gamma OP14~1 output enable On/Off.
GAOPENN: Control Gamma OP0 output enable On/Off.

VGMP		VGMN
OP15	GAOPENP	OP15
OP14~1	GAOPENC	OP14~1
OP0	GAOPENN	OP0
VGSP		VGSN

R1P[1:0]: Change the resist ratio of positive OP V12~V7
R0P[1:0]: Change the resist ratio of positive OP V56~V51
R1N[1:0]: Change the resist ratio of negative OP V12~V7
R0N[1:0]: Change the resist ratio of negative OP V56~V51

R0P/N	00	01	10	11
V56	85.7%	70.8%	80.4%	66.4%
V55	71.4%	56.9%	63.6%	49.6%
V54	57.1%	40.2%	49.7%	34.3%
V53	42.8%	29.1%	34.3%	22.9%
V52	28.5%	16.6%	20.3%	13.7%
V51	14.2%	5.5%	9.2%	6.1%

R1P/N	00	01	10	11
V12	85.7%	86.1%	86%	89.1%
V11	71.4%	70.8%	76.7%	80%
V10	57.1%	59.7%	62.7%	69.1%
V9	42.8%	45.8%	46%	51%
V8	28.5%	33.3%	30.7%	37.4%
V7	14.2%	16.6%	13.9%	20.4%

GAOP_CLAMP: Gamma output overshoot suppression.

Restriction	-

2.6.13.SET_OSCM: Oscillator M setting (Page1 - C5h)

CMD/PAs	R/W	D7	D6	D5	D4	D3	D2	D1	D0	HEX
Command	**R/W**	1	1	0	0	0	1	0	1	C5
Parameter 1	**R/W**	-	-	OSC_DIV[1:0]		-	-	OSCM_ADJ[1:0]		-
Parameter 2	**R/W**	-	-	-	-	-	-	OSCM _EN	OSCM _BIAS_ EN	-
Parameter 3	**R/W**	OSC_KEY[7:0]								

Description

This command is used to set oscillator OSCM.

OSCM_EN: Control oscillation of OSCM On/Off.
0 : Disable
1 : Enable

OSCM_BIAS_EN: Oscillator M bias current enable method.
0 : Bias turn on only when OSCM_EN=1
1 : Enables R path bias for fast start-up

OSCM_ADJ[1:0]: Adjust frequency oscillator M.

OSCM_ADJ[1:0]		OSCD (MHz) power	OSCD/2 (MHz)/2 TCON
0	0	16	8
0	1	20(default)	10
1	0	24	12
1	1	28	14

OSCM_DIV[1:0]: Adjust frequency oscillator M.

OSCM_ADJ[1:0]		TCON frequency
0	0	OSCD/2
0	1	OSCD/4
1	0	OSCD/8
1	1	reserved

OSC_KEY[7:0]: Set 5Ah to force disable Clock.

Restriction

-

2.6.14.SET_IO_PAD: Set IO Pad output driving ability (Page1 - C8h)

CMD/PAs	R/W	D7	D6	D5	D4	D3	D2	D1	D0	HEX
Command	**R/W**	1	1	0	0	1	0	0	0	C8
Parameter 1	**R/W**	-	-	-	-	-	-	-	IO_HOLDDLY	-
Parameter 2	**R/W**	IM_REG[3:0]				IM_EN[2:0]			-	-

Description

This command is used to set output pad driving abilty.

IO_HOLDDLY: SDO/DB/SDA hold time delay.

IM_REG[3:0]: Internal use, not open. IM_REG[3:2] don't care.

IM_EN[2:0]: Select IM. Internal use, not open.

IM_EN[2:0]	IM select
101	IM_REG
Others	Hardware pins

Restriction

-

2.6.15.SET_INH_CHKSUM: Set inhosue checksum(Page1 - D7h)

CMD/PAs	R/W	D7	D6	D5	D4	D3	D2	D1	D0	HEX
Command	**R/W**	1	1	0	1	0	1	1	1	D7
Parameter 1	**R/W**	-	INH_CHKSUM_PAGE_SEL[1:0]		SLPIN_RESET_EN	INH_CHKSUM_OFF	INH_CHKSUM_SEL[2:0]			-

Description

This command is used to set checksum of inhouse register.

NH_CHKSUM_PAGE_SEL[1:0]: Select the inhouse checksum to be included in the calculation.

INH_CHKSUM_PAGE_SEL[1:0]	Pages included in calculation
00	Page0
01	Page0+Page1
10	Page0+Page1+Page2
11	Page0+Page1+Page2+Page3

SLPIN_RESET_EN:

0: Disable the function of reset Inhouse checksum in Sleep-in(for ESD TEST)
1: Enable the function of reset Inhouse checksum in Sleep-in

INH_CHKSUM_OFF:

0: Inhouse register checksum function ON
1: Inhouse register checksum function OFF

INH_CHKSUM_SEL[2:0]: The interval between each checksum calculation

INH_CHKSUM_SEL[2:0]:	Checksum Calculation Interval
000	2 Frames
001	4 Frames
010	8 Frames
011	16 Frames
100	32 Frames
Others	64 Frames

Restriction

-

2.6.16.HWPIN_OFF: TEST_EN Register setting(Page1 - E7h)

CMD/PAs	R/W	D7	D6	D5	D4	D3	D2	D1	D0	HEX
Command	**R/W**	1	1	1	0	0	1	1	1	E7
Parameter 1	**R/W**	-	-	-	-	TEST_EN_REG[3:0]				-

Description

This command is used to set TEST mode enable.

TEST_EN_REG:

TEST_EN _REG[3:0]	uP_Key	TSETI[2:0]	uP	re-load OTP	ROM test	OSC
1110	meet	-	off	off	allow	external
1110	NO	101	on	on	NO	external
1110	NO	001	off	off	NO	internal
1110	NO	010	off	off	NO	external
1110	NO	011	on	off	NO	internal
1110	NO	100	on	off	NO	external
1110	NO	000	on	on	NO	internal
1110	NO	111	on	on	NO	internal
1110	NO	110	on	on	NO	internal

Restriction

-

2.6.17.STD_SEL: Standard command option R0Ah/R0Fh (Page1 - E9h)

CMD/PAs	R/W	D7	D6	D5	D4	D3	D2	D1	D0	HEX
Command	**R/W**	1	1	1	0	1	0	0	1	E9
Parameter 1	**R/W**	-	-	RX0F _B0_ SEL	DISP ON_S EL	RX0A _B2_ MIX	RX0A _B0_ MIX	-	-	-

Description

This command is used to set STD command checksum comparison status

DISPON_SEL: select dispon read status
0:without DISP_sync
1: with DISP_sync

RX0F_B0_SEL: Nokia mode 0F bit 0 select
0:disable
1:inh_cs_cmpr

RX0A_B2_MIX: mix Rx0A bit2 with chksum error flag
0:disable
1:enable

RX0A_B0_MIX: mix Rx0A bit0 with chksum error flag
0:disable
1:enable

Restriction

-

2.6.18.SET_ESD_DET: SET ESD detect function (Page1 - EBh)

CMD/PAs	R/W	D7	D6	D5	D4	D3	D2	D1	D0	HEX
Command	**R/W**	1	1	1	0	1	0	1	1	EB
Parameter 1	**R/W**	-	-	ERR_FG_SEL [1:0]				ESD_ DET_ EN	CMD_ VS_T G_EN	-
Parameter 2	**R/W**			HS_WIDTH[6:0]						
Description	This command is used to ESD protect **ERR_FG_SEL[1:0]**:select error flag 00:DE 01:HS 10:N/A 11:N/A **CMD_VS_TG_EN**:enable 2c3c vs toggle flag 0:enable 1:disable **ESD_DET_EN**:enable video ESD detect function 0:enable 1:disable **HS_WIDTH[6:0]**:set hs range for esd detect: 240(pclk)+HS_WIDTH[6:0]*8(pclk)=hs width(it must large then 1Eh)									
Restriction	-									

2.6.19.SET_WRX: SET WRX timing (Page1 - EEh)

CMD/PAs	R/W	D7	D6	D5	D4	D3	D2	D1	D0	HEX
Command	**R/W**	1	1	1	0	1	1	1	0	EE
Parameter 1	**R/W**	-	-	-	-	-	-	-	WRX_ SEL	-
Description	**WRX_SEL** :1:enable abnormal WRX timing(CSX is shorter than WRX) 0:disable									
Restriction	-									

2.7. Jadard page 2 command Description

2.7.1. GRAM_OPT_SET: GRAM OPTION SELECTION (Page2 - B0h)

CMD/Pas	R/W	D7	D6	D5	D4	D3	D2	D1	D0	HEX
Command	**R/W**	1	0	1	1	0	0	0	0	B0
Parameter 1	**R/W**				GRAM_CHKSUM_EN	GRAM_DATA_OW				-
Description	This command is used to set GRAM option. GRAM_CHKSUM_EN : GRAM checksum enable GRAM_DATA_OW : data over write setting 0: return 1: ignore									
Restriction	-									

2.7.2. INTR_ACC_SET: (Page2 - B4h)

CMD/Pas	R/W	D7	D6	D5	D4	D3	D2	D1	D0	HEX
Command	**R/W**	1	0	1	1	1	0	0	0	B4
Parameter 1	**R/W**			INTR_DISP_VAL[5:0]						-
Description	This command is used to set non-display area. INTR_DISP_VAL[6:0] : Indicate non-display area of data on partial mode									
Restriction	-									

2.7.3. GRAM_TMG_SET (Page2 - B5h)

CMD/Pas	R/W	D7	D6	D5	D4	D3	D2	D1	D0	HEX
Command	**R/W**	1	0	1	1	0	1	0	1	B5
Parameter 1	**R/W**	-	GRAM_DMY0[4:2]			GRAM_SWON[1:0]		GRAM_SWOFF[1:0]		-
Parameter 2	**R/W**	GRAM_DMY0[1:0]	GRAM_RDS[5:0]							
Description	GRAM_SWON:Turn on GRAM power switch timing. 00: 0us 01: 2us 10: 5us (default) 11: 10us GRAM_SWOFF:Turn off GRAM power switch timing. 00: 0us 01: 2us 10: 5us (default) 11: 10us GRAM_DMY0[4:0] : reserve. GRAM_RDS[5:0] : GRAM internal timing adjusting.									
Restriction	-									

2.7.4. GRAM_PWR_SET (Page2 - B6h)

CMD/Pas	R/W	D7	D6	D5	D4	D3	D2	D1	D0	HEX
Command	**R/W**	1	0	1	1	0	1	1	0	B6
Parameter 1	**R/W**	-	-	-	-	-	-	GRAM_OFF[1:0]		-
Parameter 2	**R/W**	-	GRAM_PWR_OPT	GRAM_RST_R	GRAM_RST_L	GRAM_PWR_R[1:0]		GRAM_PWR_L[1:0]		
Description	**GRAM_OFF[1:0]** : Shut down GRAM power mode 00: Turn off GRAM power only when reset keep low (default) 01: N/A 10: Turn off GRAM power when reset keep low or sleep-in 11: Always turn off GRAM power **GRAM_PWR_OPT :** GRAM PWM/RST control by register/ TCON 00: TCON 01: Register **GRAM_RST_R/L :** GRAM control signal **GRAM_PWR_R/L[1:0] :** GRAM control signal									
Restriction	-									

2.7.5. GRAM_XREPAIR_L0 (Page2 - B8h)

CMD/Pas	R/W	D7	D6	D5	D4	D3	D2	D1	D0	HEX
Command	**R/W**	1	0	1	1	1	0	0	0	B8
Parameter 1	**R/W**	-	-	-	-	GRAM_REPAIR_EN0_L	GRAM_REPAIR_EN1_L	GRAM_REPAIR_ROW0_L[8]	GRAM_REPAIR_ROW1_L[8]	-
Parameter 2	**R/W**	GRAM_REPAIR_ROW0_L[7:0]								
Parameter 3	**R/W**	GRAM_REPAIR_ROW1_L[7:0]								
Description	//For CP test **GRAM_REPAIR_EN0_L0 :** repair enable **GRAM_REPAIR_EN0_L1 :** repair enable **GRAM_REPAIR_ROW0_L[8:0] :** Repair row address **GRAM_REPAIR_ROW1_L[8:0] :** Repair row address 3									
Restriction	-									

2.7.6. GRAM_XREPAIR_L0(Page2 - B9h)

CMD/Pas	R/W	D7	D6	D5	D4	D3	D2	D1	D0	HEX
Command	**R/W**	1	0	1	1	1	0	0	1	B9
Parameter 1	**R/W**	-	-	-	-	GRAM_REPAIR_EN0_R	GRAM_REPAIR_EN1_R	GRAM_REPAIR_ROW0_R[8]	GRAM_REPAIR_ROW1_R[8]	-
Parameter 2	**R/W**	GRAM_REPAIR_ROW0_R[7:0]								
Parameter 3	**R/W**	GRAM_REPAIR_ROW1_R[7:0]								
Description	//For CP test **GRAM_REPAIR_EN0_R0 :** repair enable **GRAM_REPAIR_EN0_R1 :** repair enable **GRAM_REPAIR_ROW0_R[8:0] :** Repair row address **GRAM_REPAIR_ROW1_R[8:0] :** Repair row address 3									
Restriction	-									

2.7.7. SET_DBGSEL(Page2 - BAh)

CMD/Pas	R/W	D7	D6	D5	D4	D3	D2	D1	D0	HEX
Command	**R/W**	1	0	1	1	1	0	0	1	B9
Parameter 1	**R/W**	DBG_SEL[7:0]								-
Parameter 2	**R/W**	DBG_SEL[8]						DBG_LOW_EN	DBG_EN	
Description	**DBG_EN :** Debug port enable **DBG_SEL[8:0] :** debug index **DBG_LOW_EN :** switch high/low byte for DBIB/ QSPI/ RGB interface									
Restriction	-									

2.7.8. SETROM (Page2 - BBh)

CMD/Pas	R/W	D7	D6	D5	D4	D3	D2	D1	D0	HEX
Command	**R/W**	1	0	1	1	1	0	0	1	B9
Parameter 1	**R/W**	-	-	-	-	ODS[3:0]				
Description	This command is use to set internal ROM test. **ODS[3:2]:** Trim pulse falling delay. **ODS[1:0]:** Trim pulse rising delay.									
Restriction	-									

JX9851 ROM ODS[3:0] 設定表 @ page5-B2			
Enable Falling delay	ODS[3:2]	Enable Rising delay	ODS[1:0]
1	00	0	00
4	01	2	01
0	10	1	10
3	11	3	11

*remark : 數字越大，Delay Time 越長

2.7.9. TEST_CTRL: Source option for CP test (Pag2 - BCh)

CMD/PAs	R/W	D7	D6	D5	D4	D3	D2	D1	D0	HEX
Command	**R/W**	1	0	1	1	1	1	0	0	BC
Parameter 1	**R/W**	OSC_TEST_EN	-	-	S_CP_POL_GATING[4:0]					-
Description	This command is use to set source option for CP test. **OSC_TEST_EN:** Enable external OSC path. 0: Disable (Internal clock of TCON is come from embedded OSC circuit) 1: Enable (Internal clock of TCON is come from TEST_OSC Pad) **S_CP_POL_GATING[4:0]:** Fix source polarity for CP test.									
Restriction	-									

2.7.10.INH_CHKSUM_LOCK: Inhouse checksum lock setting (Pag2 - BDh)

CMD/PAs	R/W	D7	D6	D5	D4	D3	D2	D1	D0	HEX
Command	**R/W**	1	0	1	1	1	1	0	1	BD
Parameter 1	**R/W**	-	-	-	-	-	-	NO_CHKSUM_EN[1:0]		-
Parameter 2	**R/W**	INH_CHKSUM_LOCK_EN[7:0]								-
Description	This command is used to set inhouse checksum lock function. **NO_CHKSUM_EN[1:0]:** Select GAMMA_SET , VGPOW_SET, and trim page(page3) will be excluded from inhouse checksum calculation or not. **00/01/10:** GAMMA_SET , VGPOW_SET, and trim page will be excluded from inhouse checksum calculation. **11:** GAMMA_SET , VGPOW_SET, and trim page will be included in inhouse checksum calculation. **INH_CHKSUM_LOCK_EN[7:0]:** Inhouse checksum (FCC_LOCK) will be a fixed value when inhouse checksum lock function is enabled. **0x5A:** Enable inhouse checksum lock. **0x69:** Disable inhouse checksum lock. Note: Set 0x5A to activate lock function when DISP_SYNC=3.									
Restriction	-									

2.7.11.INH_CHKSUM_DBG: Inhouse checksum debug (Page2 - RBEh)

CMD/PAs	R/W	D7	D6	D5	D4	D3	D2	D1	D0	HEX
Command	**R/W**	1	0	1	1	1	1	1	0	BE
Parameter 1	**R/W**	-	-	-	-	-	UP_ TEST_ MODE _EN	INH_ CMPR _RST	TEST_ MODE _EN	-
Parameter 2	**R**	INH_FCS[7:0]								-
Parameter 3	**R**	INH_CCS[7:0]								-
Parameter 4	**R**	LOCK_FCS[7:0]								-
Parameter 5	**R**	-	-	-	-	-	-	-	INH_ CS_ CMPR	-
Parameter 6	**R**	PN_CS[7:0]								-
Description	This command is used to set inhouse checksum debug. **UP_TEST_MODE_EN:** uP turn on/off TEST_MODE_EN option. **0:** Do nothing. **1:** Turn on TEST_MODE_EN after DISPON; turn off TEST_MODE_EN after DISPOFF/SLPIN. **INH_CMPR_RST:** Wake up uP to reload OTP when checksum comparison is incorrect. **0:** Disable **1:** Enable **TEST_MODE_EN:** Enable registers read/write test mode. **0:** Disable **1:** Enable **INH_FCS[7:0]:** Read inhouse first checksum. **INH_CCS[7:0]:** Read inhouse continuous checksum. **LOCK_FCS[7:0]:** Read inhouse locked first checksum when **INH_CHKSUM_LOCK_EN[7:0] = 0x5A.** **INH_CS_CMPR:** Inhouse checksum comparison result. **0:** Correct **1:** Incorrect **PN_CS[7:0]:** Read inhouse checksum corresponding to INH_CHKSUM_PAGE_SEL[1:0] setting.									
Restriction	-									

2.7.12.TEST_PAD_SEL (Page2 - BFh)

CMD/Pas	R/W	D7	D6	D5	D4	D3	D2	D1	D0	HEX
Command	**R/W**	1	0	1	1	1	0	0	1	B9
Parameter 1	**R/W**	-	-	TEST_GAMMA_SEL[5:0]						-
Parameter 2	**R/W**	-	-	-	-	-	TESTPOW_S[2:0]			

Description

TEST_GAMMA_SEL[5:0]: To set gamma output from TESTP1/TESTN1 pad .

TEST_GAMMA_SEL [5:0]	Pos Debug Port	Neg Debug Port
100000	VO0	VO0
100001	VO1	VO1
100010	VO2	VO2
100011	VO4	VO4
100100	VO6	VO6
100101	VO13	VO13
100110	VO20	VO20
100111	VO27	VO27
101000	VO36	VO36
101001	VO43	VO43
101010	VO50	VO50
101011	VO57	VO57
101100	VO59	VO59
101101	VO61	VO61
101110	VO62	VO62
101111	VO63	VO63
110000	VO10	VO10
110001	VO17	VO17
110010	VO24	VO24
110011	VO31	VO31
110100	VO32	VO32
110101	VO39	VO39
110110	VO46	VO46
110111	VO54	VO54
111000	AVDD_SOURCE	AVEE_SOURCE
111001	AVSS	AVEE
111010	AVSS	AVEE
111011	AVSS	AVEE
111100	AVSS	AVEE
111101	AVSS	AVEE
111110	AVSS	AVEE
111111	AVSS	AVEE

TEST_GAMMA_SEL [5]=0, Debug port=HiZ

	TESTPOW_S[2:0] : debug index

TESTPOW_S[2:0]	TEST_P	TEST_N
111	VREF_BUF[1]	AVSS
110	VCIP2X_G	-
101	AVSSN	VCL_G
100	VGSN_IN	AVEE_G
011	AVDD_G	VGMN_IN
010	VGMP_IN	-
001	VGSP_IN	-
000	Hi-Z	Hi-Z

Restriction	-

2.7.13.SET_TC_CHKSUM (Page2 - C0h)

CMD/Pas	R/W	D7	D6	D5	D4	D3	D2	D1	D0	HEX
Command	**R/W**	1	0	1	1	1	0	0	1	B9
Parameter 1	**R/W**							CRC_OPT	TC_CRC_EN	-
Parameter 2	**R**			TC_CRC_OUT[5:0]						
Description	**TC_CRC_EN:** Enable CRC output of TC_CRC_OUT[7:0]. **CRC_OPT :** reserve **TC_CRC_OUT[5:0]:** Read TCON CRC output value									
Restriction	-									

2.7.14.SET_TC_OTHER (Page2 - C1h)

CMD/Pas	R/W	D7	D6	D5	D4	D3	D2	D1	D0	HEX
Command	**R/W**	1	0	1	1	1	0	0	1	B9
Parameter 1	**R/W**	TC_BACKUP[7:0]								-
Description	For backup register									
Restriction	-									

2.7.15.GRAM_BIST_SET (Page2 - E5h)

CMD/Pas	R/W	D7	D6	D5	D4	D3	D2	D1	D0	HEX
Command	**R/W**	1	1	1	0	0	1	0	1	E5
Parameter 1	**R/W**	-	-	-	-	-	-	GRAM_MBIST_SCAN_DIR	GRAM_BIST_EN	-
Parameter 2	**R/W**	-	-	-	-	-	GRAM_MBIST_ALGO_SEL[2:0]			
Parameter 3	**R/W**	-	-	GRAM_MBIST_UD_PTN_TOGGLE[1:0]		-	-	GRAM_MBIST_UD_PTN[17:16]		
Parameter 4	**R/W**	GRAM_MBIST_UD_PTN[15:8]								
Parameter 5	**R/W**	GRAM_MBIST_UD_PTN[7:0]								
Description	//For CP test **GRAM_BIST_EN :** BIST Enable **GRAM_MBIST_SCAN_DIR :** BIST scan direction **GRAM_MBIST_ALGO_SEL[2:0] :** BIST algorithm select (1/2/4) **MBIST_FAIL_ADDR_L_0/1[7:0] :** toggle for BIST pattern **GRAM_MBIST_UD_PTN[17:0] :** BIST pattern setting									
Restriction	-									

2.7.16.GRAM_BIST_SET (Page2 - E6h)

CMD/Pas	R/W	D7	D6	D5	D4	D3	D2	D1	D0	HEX
Command	**R/W**	1	1	1	0	0	1	1	0	E6
Parameter 1	**R/W**	-	GRAM_ MBIST_ DONE	GRAM_ MBIST_ FAIL	GRAM_ MBIST_ REPAIR	MBIST_FAIL_ NUM_R[1:0]		MBIST_FAIL_ NUM_L[1:0]		-
Parameter 2	**R/W**	-	-	-	-	MBIST_ FAIL_A DDR_R _1[8]	MBIST_ FAIL_A DDR_R _0[8]	MBIST_ FAIL_A DDR_L _1[8]	MBIST_ FAIL_A DDR_L _0[8]	
Parameter 3	**R/W**	MBIST_FAIL_ADDR_L_0[7:0]								
Parameter 4	**R/W**	MBIST_FAIL_ADDR_L_1[7:0]								
Parameter 5	**R/W**	MBIST_FAIL_ADDR_R_0[7:0]								
Parameter 6	**R/W**	MBIST_FAIL_ADDR_R_1[7:0]								
Description	//For CP test **GRAM_MBIST_REPAIR:** GRAM BIST repairable check **GRAM_MBIST_FAIL:** GRAM BIST fail flag **GRAM_MBIST_DONE:** GRAM BIST done flag **MBIST_FAIL_NUM_L/R[1:0]:** GRAM MBIST fail row number **MBIST_FAIL_ADDR_L_0/1[8:0] :** GRAM MBIST fail address (lefr) **MBIST_FAIL_ADDR_R_0/1[8:0] :** GRAM MBIST fail address (right)									
Restriction	-									

2.7.17.GRAM_CHKSUM_GET (Page2 - E7h)

CMD/Pas	R/W	D7	D6	D5	D4	D3	D2	D1	D0	HEX
Command	**R/W**	1	1	1	0	0	1	1	1	E7
Parameter 1	**R**	GRAM_WR_CHKSUM[5:0]								-
Parameter 2	**R**	GRAM_RD_CHKSUM[5:0]								
Description	//For CP test **GRAM_WR_CHKSUM[5:0]** : Write checksum result **GRAM_RD_CHKSUM[5:0] :** Read checksum result									
Restriction	-									

2.8. Jadard page 3 command Description

2.8.1. TRIMMING2: Trimming for VREF (Page3 - B3h)

CMD/Pas	R/W	D7	D6	D5	D4	D3	D2	D1	D0	HEX
Command	**R/W**	1	0	1	1	0	0	1	1	B3
Parameter 1	**R/W**	-	-	-	VREF_T[4:0]					-
Description	This command is used to trim VREF voltage level. **VREF_T[4:0]:** VREF trimming about 6mV/step.									
Restriction	-									

2.8.2. TRIMMING3: Trimming for Band Gap (Page3 - B4h)

CMD/Pas	R/W	D7	D6	D5	D4	D3	D2	D1	D0	HEX
Command	**R/W**	1	0	1	1	0	1	0	0	B4
Parameter 1	**R/W**	-	-	-	-	-	BG1_T[2:0]			-
Description	This command is used to trim BGP voltage. **BG1_T[2:0]:** BGP1 trimming.									
Restriction	-									

2.8.3. TRIMMING4: Trimming for VDDD (Page4 - B5h)

CMD/Pas	R/W	D7	D6	D5	D4	D3	D2	D1	D0	HEX
Command	**R/W**	1	0	1	1	0	1	0	1	B5
Parameter 1	**R/W**	VDDD_T0[2:0]			-	-	VDDD_T1[1:0]			-

Description

This command is used to trim VDDD voltage.

VDDD_T0[2:0]: SLPIN VDDD voltage trimming.

VDDD_T0[2:0]	VDDD(V)
000	1.434
001	1.456
010	1.478
011	1.501
100	1.523
101	1.546
110	1.568
111	1.590

VDDD_T1[1:0]: VDDD voltage trimming.

VDDD_T1[1:0]	VDDD(V)
00	1.474
01	1.501
10	1.528
11	1.554

Restriction: -

2.8.4. TRIMMING6: Trimming for Gamma reference voltage (Page3 - B7h)

CMD/Pas	R/W	D7	D6	D5	D4	D3	D2	D1	D0	HEX
Command	**R/W**	1	0	1	1	0	1	1	1	B7
Parameter 1	**R/W**	-	VGSP_T[2:0]			VGMP_T[3:0]				-
Parameter 2	**R/W**	-	VGSN_T[2:0]			VGMN_T[3:0]				-
Description	This command is used to trim Gamma reference voltage. **VGMP_T[3:0]:** Trim the maximum reference voltage for positive gamma. 14mV/step. **VGMN_T[3:0]:** Trim the maximum reference voltage for negative gamma. -14mV/step. **VGSP_T[2:0]:** Trim the minimum reference voltage for positive gamma. 12.7mV/step. **VGSN_T[2:0]:** Trim the minimum reference voltage for negative gamma. -12.7mV/step.									
Restriction	-									

2.8.5. TRIMMING9: Trimming for VGH/VGL/AVDD/AVEE volatge (Page3 - BAh)

CMD/Pas	R/W	D7	D6	D5	D4	D3	D2	D1	D0	HEX
Command	**R/W**	1	0	1	1	1	0	1	0	BA
Parameter 1	**R/W**	-		VGHZ_T[1:0]				VGLZ_T[1:0]		-
Parameter 2	**R/W**	-	AVDDZ_T[2:0]			-	AVEEZ_T[2:0]			-
Description	This command is used to trim VGH, VGL and AVDD,AVEEvoltage. **VGHZ_T[1:0]:** VGL voltage trimming used. 200mV/step. **VGLZ_T[1:0]:** VGL voltage trimming used. 300mV/step. **AVDDZ_T[2:0]:** AVDDZ_X voltage trimming used.200mV/step. **AVEEZ_T[2:0]:** AVEEZ_X voltage trimming used 200mV/step.									
Restriction	-									

2.8.6. TRIM_GAS: Trimming for GAS (Page3 - BEh)

CMD/Pas	R/W	D7	D6	D5	D4	D3	D2	D1	D0	HEX
Command	**R/W**	1	0	1	1	1	1	1	0	BE
Parameter 1	**R/W**		GASTRIM_VCI[2:0]			-	GASTRIM_IO[2:0]			-

Description

This command is used to trim GAS function.

GASTRIM_IO[2:0]: Select the detect voltage for IOVCC GAS function.

	GASTRIM _IO[2:0]	IOVCC Voltage
GAS_ IO	000	1.25
	001	1.30
	010	1.35
	011	1.40
	100	1.45
	101	1.50
	110	1.55
	111	1.60

GASTRIM_VCI[2:0]: Select the detect voltage for VCI GAS function.

	GASTRIM _IO[2:0]	VCI Voltage
GAS_ VCI	000	1.37
	001	1.47
	010	1.59
	011	1.69
	100	1.82
	101	1.92
	110	2.04
	111	2.14

Restriction: -

2.8.7. TRIMMING_OSCM1: Trimming temperature characteristics of Oscillator M (Page4 - C7h)

CMD/Pas	R/W	D7	D6	D5	D4	D3	D2	D1	D0	HEX
Command	**R/W**	1	1	0	0	0	1	1	1	C7
Parameter 1	**R/W**	-	OSCM_TEMP[2:0]			-	-	-	-	-

Description

This command is used to trim temeprature characterticis of oscillator M.

OSCM_TEMP[2:0]: Trim temeprature characteristics of Oscillator M.

Restriction: -

2.8.8. TRIMMING_OSCM2: Trimming frequency of Oscillator M (Page4 - C8h)

CMD/Pas	R/W	D7	D6	D5	D4	D3	D2	D1	D0	HEX
Command	**R/W**	1	1	0	0	1	0	0	0	C8
Parameter 1	**R/W**	-	-	-	OSCM_TRIM[4:0]					-

Description

This command is used to trim Oscillator M frequency.

OSCM_TRIM[4:0]: Trim frequency of oscillator M.

OSCM_TRIM[4:0]	trim back (L)
5'h00	36.25
5'h01	33.89
5'h02	31.84
5'h03	30.03
5'h04	28.42
5'h05	26.99
5'h06	25.69
5'h07	24.52
5'h08	23.45
5'h09	22.48
5'h0A	21.59
5'h0B	20.76
5'h0C	20.00
5'h0D	19.30
5'h0E	18.64
5'h0F	18.03
5'h10	17.46
5'h11	16.93
5'h12	16.43
5'h13	15.95
5'h14	15.51
5'h15	15.08
5'h16	14.69
5'h17	14.31
5'h18	13.95
5'h19	13.61
5'h1A	13.29
5'h1B	12.98
5'h1C	12.69
5'h1D	12.41
5'h1E	12.14
5'h1F	11.89

Restriction: -

3. JADARD COMMAND LIST

3.1. OTP table

OTP_INDEX (HEX)	Ref. Command	Ref. Index	Duplicate	B7	B6	B5	B4	B3	B2	B1	B0
0	SETECO	P0_E6_01	1	NVALID	ECO0[6:0]						
1	RAMCTRL	P0_D7_01	1	NVALID	CR_OPTION	SPI_2LAN_EN	RP	RM	MLBIT_INV	DM[1:0]	
2		P0_D7_02		SCL_PL	EXT_VS_PL	EPF[1:0]		ENDIAN[1:0]		MDT[1:0]	
3	SET_R_GAMMA	P0_C8_01	1	NVALID	-	RPA15[5:0]					
4		P0_C8_02		-	-	RPA14[5:0]					
5		P0_C8_03		-	-	RPA13[5:0]					
6		P0_C8_04		-	-	RPA12[5:0]					
7		P0_C8_05		-	-	RPA11[5:0]					
8		P0_C8_06		-	-	RPA10[5:0]					
9		P0_C8_07		-	-	RPA9[5:0]					
A		P0_C8_08		-	-	RPA8[5:0]					
B		P0_C8_09		-	-	RPA7[5:0]					
C		P0_C8_10		-	-	RPA6[5:0]					
D		P0_C8_11		-	-	RPA5[5:0]					
E		P0_C8_12		-	-	RPA4[5:0]					
F		P0_C8_13		-	-	RPA3[5:0]					
10		P0_C8_14		-	-	RPA2[5:0]					
11		P0_C8_15		-	-	RPA1[5:0]					
12		P0_C8_16		-	-	RPA0[5:0]					
13		P0_C8_17		-	-	RNA15[5:0]					
14		P0_C8_18		-	-	RNA14[5:0]					
15		P0_C8_19		-	-	RNA13[5:0]					
16		P0_C8_20		-	-	RNA12[5:0]					
17		P0_C8_21		-	-	RNA11[5:0]					
18		P0_C8_22		-	-	RNA10[5:0]					
19		P0_C8_23		-	-	RNA9[5:0]					
1A		P0_C8_24		-	-	RNA8[5:0]					
1B		P0_C8_25		-	-	RNA7[5:0]					
1C		P0_C8_26		-	-	RNA6[5:0]					
1D		P0_C8_27		-	-	RNA5[5:0]					
1E		P0_C8_28		-	-	RNA4[5:0]					
1F		P0_C8_29		-	-	RNA3[5:0]					
20		P0_C8_30		-	-	RNA2[5:0]					
21		P0_C8_31		-	-	RNA1[5:0]					
22		P0_C8_32		-	-	RNA0[5:0]					

Jadard Confidential

23	SETID	P0_E9_01	1	NVALID	-	-	-	-	-	-	-
24		P0_E9_02		ID1[7:0]							
25		P0_E9_03		ID2[7:0]							
26		P0_E9_04		ID3[7:0]							
27		P0_E9_05		ID4[7:0]							
28		P0_E9_01	2	NVALID	-	-	-	-	-	-	-
29		P0_E9_02		ID1[7:0]							
2A		P0_E9_03		ID2[7:0]							
2B		P0_E9_04		ID3[7:0]							
2C		P0_E9_05		ID4[7:0]							
2D		P0_E9_01	3	NVALID	-	-	-	-	-	-	-
2E		P0_E9_02		ID1[7:0]							
2F		P0_E9_03		ID2[7:0]							
30		P0_E9_04		ID3[7:0]							
31		P0_E9_05		ID4[7:0]							
32	GAMMA_SET	P0_B7_01	1	NVALID	VGSP_S[6:0]						
33		P0_B7_02		-	VGMP_S[6:0]						
34		P0_B7_03		-	VGSN_S[6:0]						
35		P0_B7_04		-	VGMN_S[6:0]						
36		P0_B7_01	2	NVALID	VGSP_S[6:0]						
37		P0_B7_02		-	VGMP_S[6:0]						
38		P0_B7_03		-	VGSN_S[6:0]						
39		P0_B7_04		-	VGMN_S[6:0]						
3A		P0_B7_01	3	NVALID	VGSP_S[6:0]						
3B		P0_B7_02		-	VGMP_S[6:0]						
3C		P0_B7_03		-	VGSN_S[6:0]						
3D		P0_B7_04		-	VGMN_S[6:0]						
3E	OTP_REPAIR	P0_D6_01	1	NVALID	-	-	-	-	-	REPAIR_PAGE[1:0]	
3F		P0_D6_02		REPAIR_INDEX[7:0]							
40		P0_D6_03		REPAIR_PAR[7:0]							
41		P0_D6_04		REPAIR_VALUE[7:0]							
42	GRAM_XREPAIR_L	P2_B8_01	1	NVALID	-	-	-	GRAM_REPAIR_EN0_L	GRAM_REPAIR_EN1_L	GRAM_REPAIR_ROW0_L[8]	GRAM_REPAIR_ROW1_L[8]
43		P2_B8_02		GRAM_REPAIR_ROW0_L[7:0]							
44		P2_B8_03		GRAM_REPAIR_ROW1_L[7:0]							
45	GRAM_XREPAIR_R	P2_B9_01	1	NVALID	-	-	-	GRAM_REPAIR_EN0_R	GRAM_REPAIR_EN1_R	GRAM_REPAIR_ROW0_R[8]	GRAM_REPAIR_ROW1_R[8]
46		P2_B9_02		GRAM_REPAIR_ROW0_R[7:0]							
47		P2_B9_03		GRAM_REPAIR_ROW1_R[7:0]							

48	VGPOW_SET	P0_B2_01	1	NVALID	VGPOW_OFFSET[6:0]						
49		P0_B2_01	2	NVALID	VGPOW_OFFSET[6:0]						
4A	SET_GAMMA_OP	P1_C4_01	1	NVALID	GAOPEN N	GAOPEN C	GAOPEN P	R1P[1:0]		R0P[1:0]	
4B		P1_C4_02		-	-	-	GAOP_CLAMP	R1N[1:0]		R0N[1:0]	
4C	TRIMMING2	P3_B3_01	1	NVALID	-	-	VREF_T[4:0]				
4D	TRIMMING3	P3_B4_01	1	NVALID	-	-	-	-	BG1_T[2:0]		
4E	TRIMMING4	P3_B5_01	1	NVALID	VDDD_T0[2:0]			-	-	VDDD_T1[1:0]	
4F	TRIMMING6	P3_B7_01	1	NVALID	VGSP_T[2:0]			-	VGMP_T[2:0]		
50		P3_B7_02		-	VGSN_T[2:0]			-	VGMN_T[2:0]		
51	TRIMMING9	P3_BA_01	1	NVALID	-	VGHZ_T[1:0]		-	-	VGLZ_T[1:0]	
52		P3_BA_02		-	AVDDZ_T[2:0]			-	AVEEZ_T[2:0]		
53	TRIM_GAS	P3_BE_01	1	NVALID	GASTRIM_VCI[2:0]			-	-	GASTRIM_IO[1:0]	
54	TRIMMING_OSCM1	P3_C7_01	1	NVALID	OSCM_TEMP[2:0]			-	-	-	-
55	TRIMMING_OSCM2	P3_C8_01	1	NVALID	-	-	OSCM_TRIM[4:0]				

3.2. OTP Programming Flow

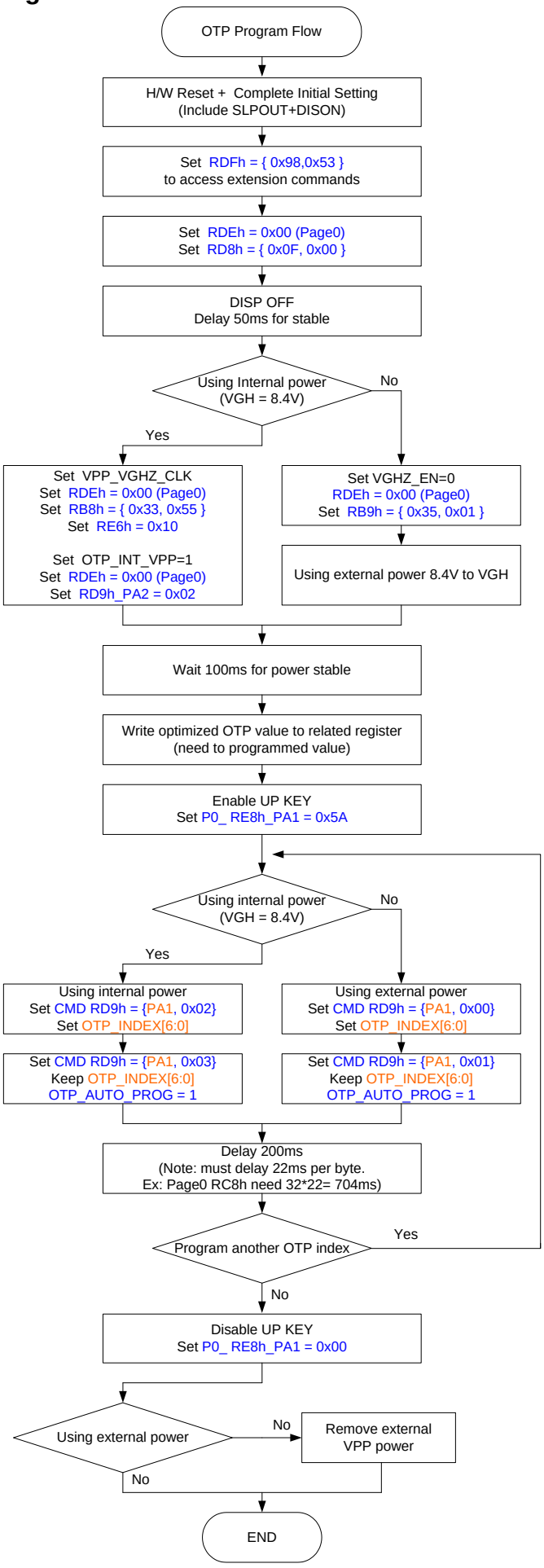

3.3. Programming Sequence

Step	Operation
1	Power on and HWRST the module. Then do SLPOUT.
2	Set 0xDFh = 0x98,0x53 to access extension commands.
3	Set page0 CMD(RDEh=0x00h) , 1) Internal power mode, set Page0 RB8h={0x33, 0x55}, RE6h=0x10, RD9h_PA2=0x02 (OTP_INT_VPP = 1) 2) External power mode, set Page0 RB9h={0x35, 0x01}, then feed external power 8.4 to VGH. (OTP_INT_VPP = 0).
4	Wait 100ms for VPP power stable.
5	Write optimized OTP value to related register.
6	Set Page0 CMD(RDEh=0x00h), then set Page0_0xE8h = 0x5A to enable UP KEY.
7	Set 0xD9h_PA1 (OTP_INDEX[6:0]) that you want to programmed.
8	Set 0xD9h_PA2[0]=1 (OTP_AUTO_PROG=1)
9	Delay 22ms per byte for internal power to program OTP. Or delay 22ms per byte for external power to program OTP.
10	One OTP block programming was completed. Return to step (7) for next OTP block programming. Or go next step if all OTP programming is finished.
11	Set Page0_0xE8h = 0x00 to disable OTP KEY.
12	If you use external power, remove the external power 8.4V from VPP.

Note:

1. All OTP default value is 1.
2. OTP can be reloaded only NVALID bit is burned(value is 0).
3. Fifipower driver IC do auto OTP programming. User only set the start OTP_INDEX of the Ref. CMD block then all block is programmed by driver IC. This function also can be used for MTP Ref. CMD block.

   For example:

   a. To program SETID 1st time, user set OTP_INDEX=023h then programming from OTP_INDEX=023h to OTP_INDEX=027h.
   b. To program SETID 2nd time, user still set OTP_INDEX=023h then programming from OTP_INDEX=028h to OTP_INDEX=02Ch.

3.4. OTP Programming example of VCOM setting

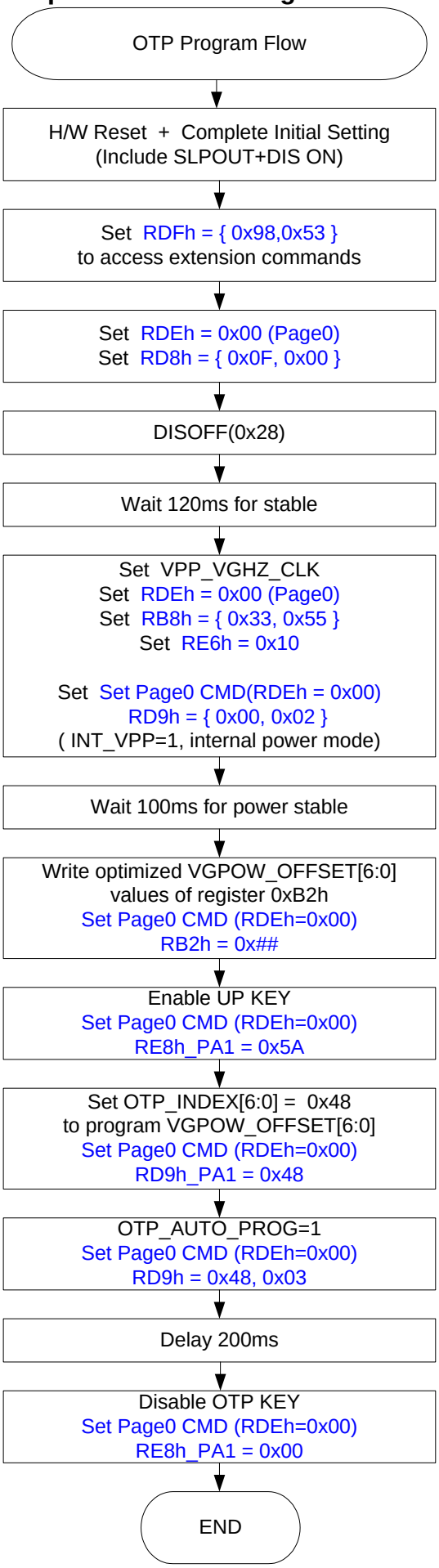

3.5. OTP read example

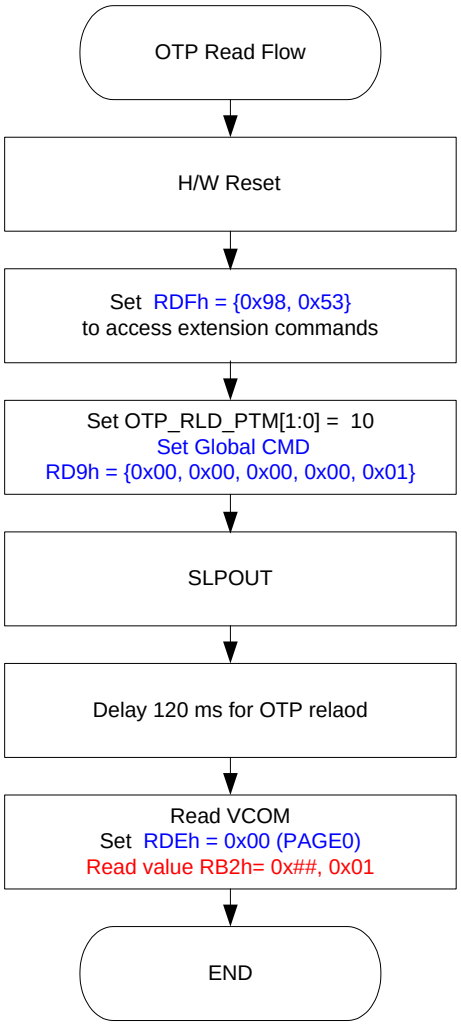

4. Read sequence for inhouse register

4.1. Serial interface read sequence for inhouse register

3-line Serial Interface Read Sequence (inhouse register)

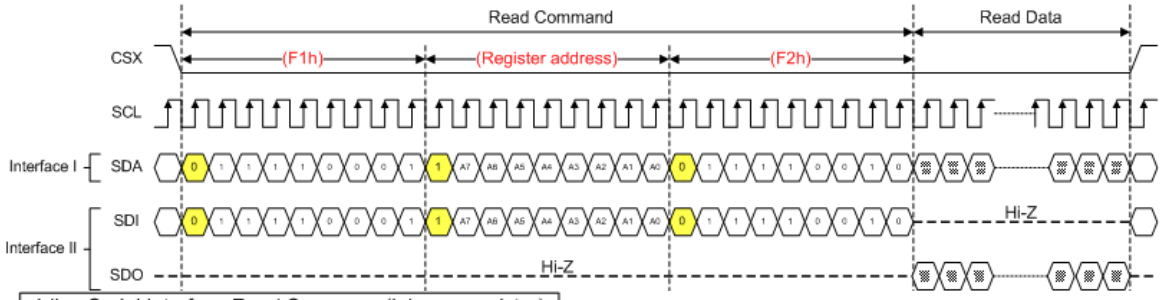

4-line Serial Interface Read Sequence (inhouse register)

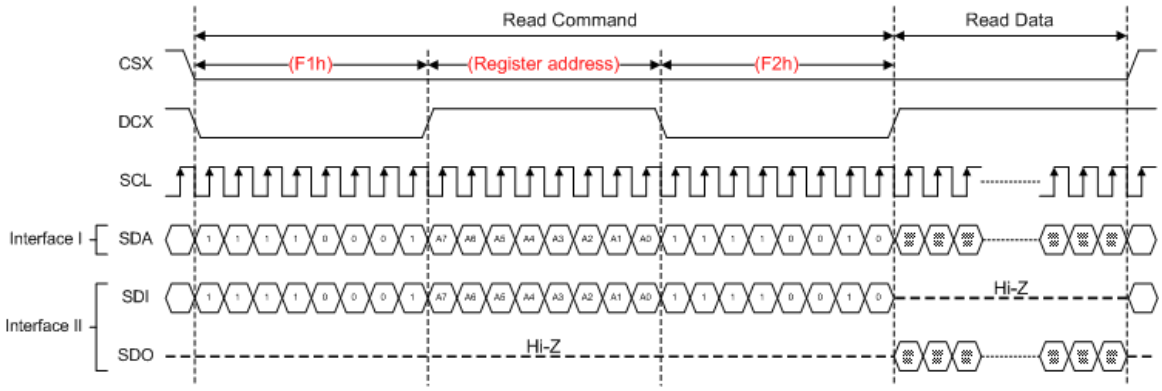
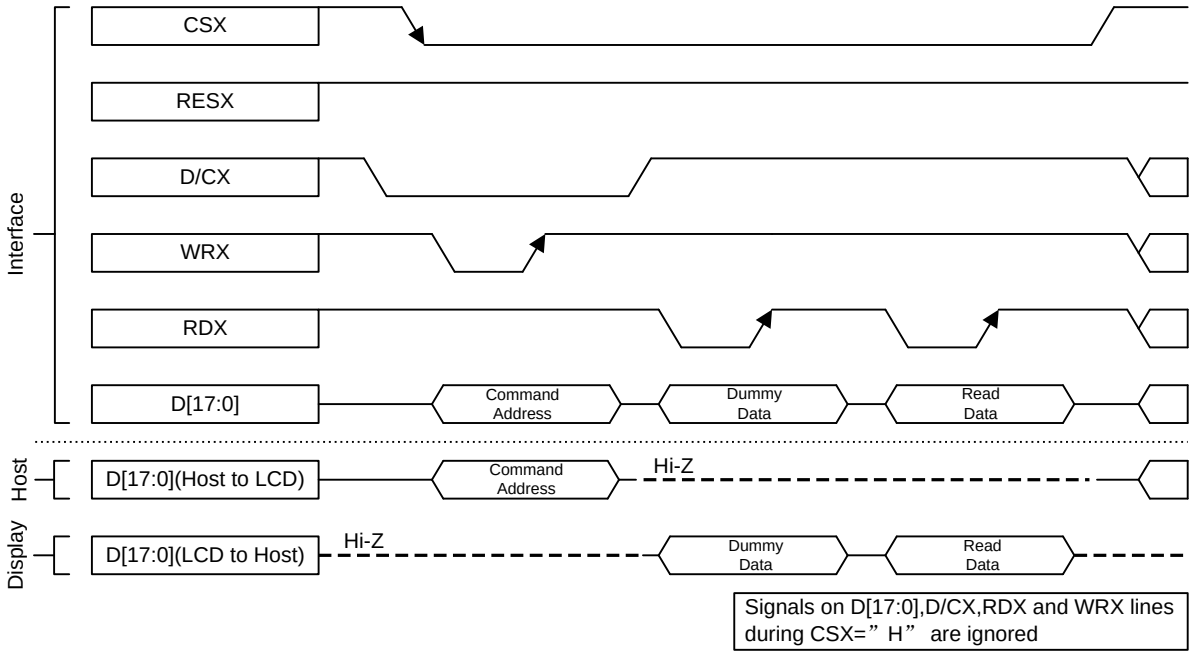
4.2. Parallel interface read sequence for inhouse register