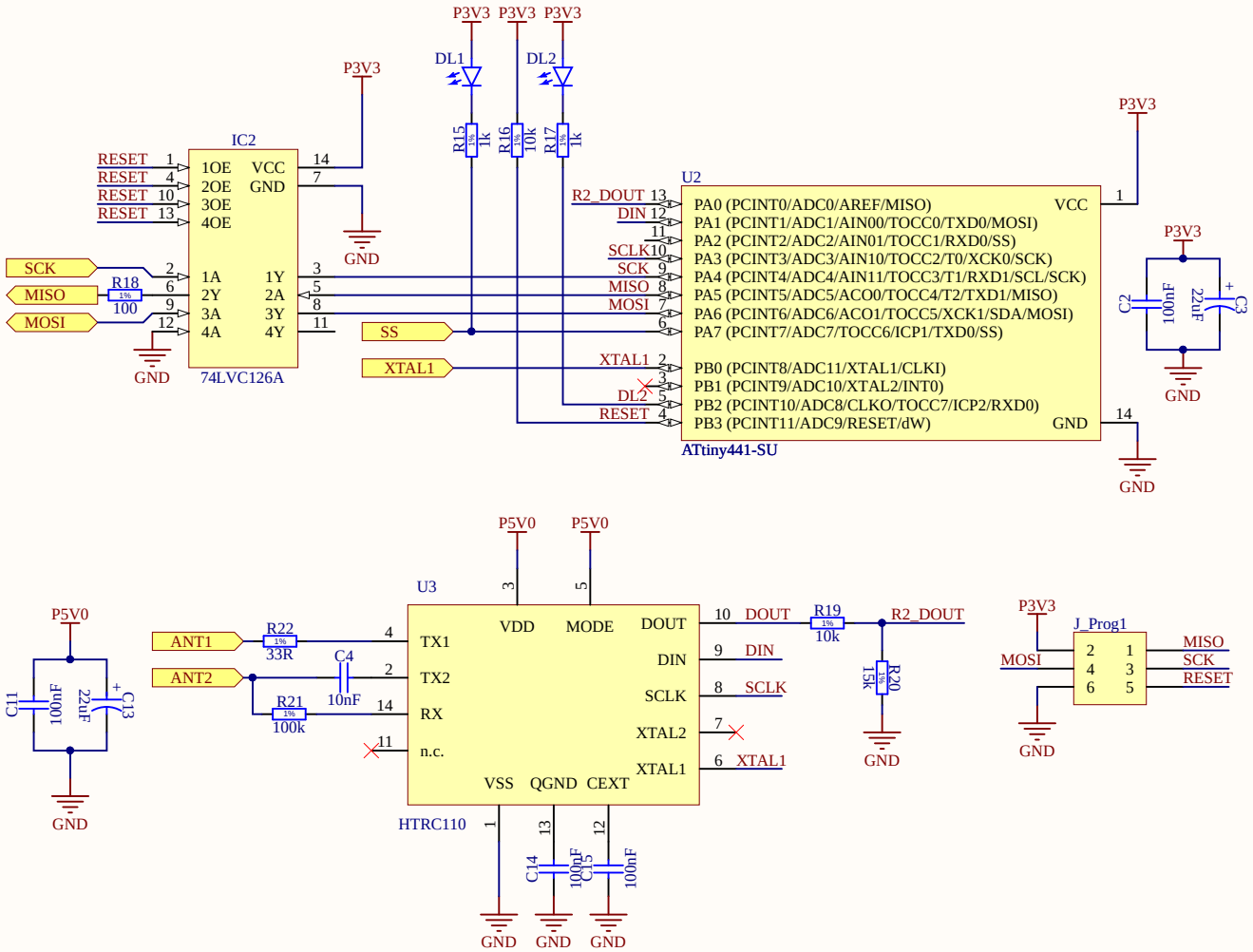

Title	Slave_subcircuit	
Size A4	Number	Revision
Date: 2018-05-13		Sheet of
File: C:\Users\..\Slave.SchDoc		Drawn By: A.F