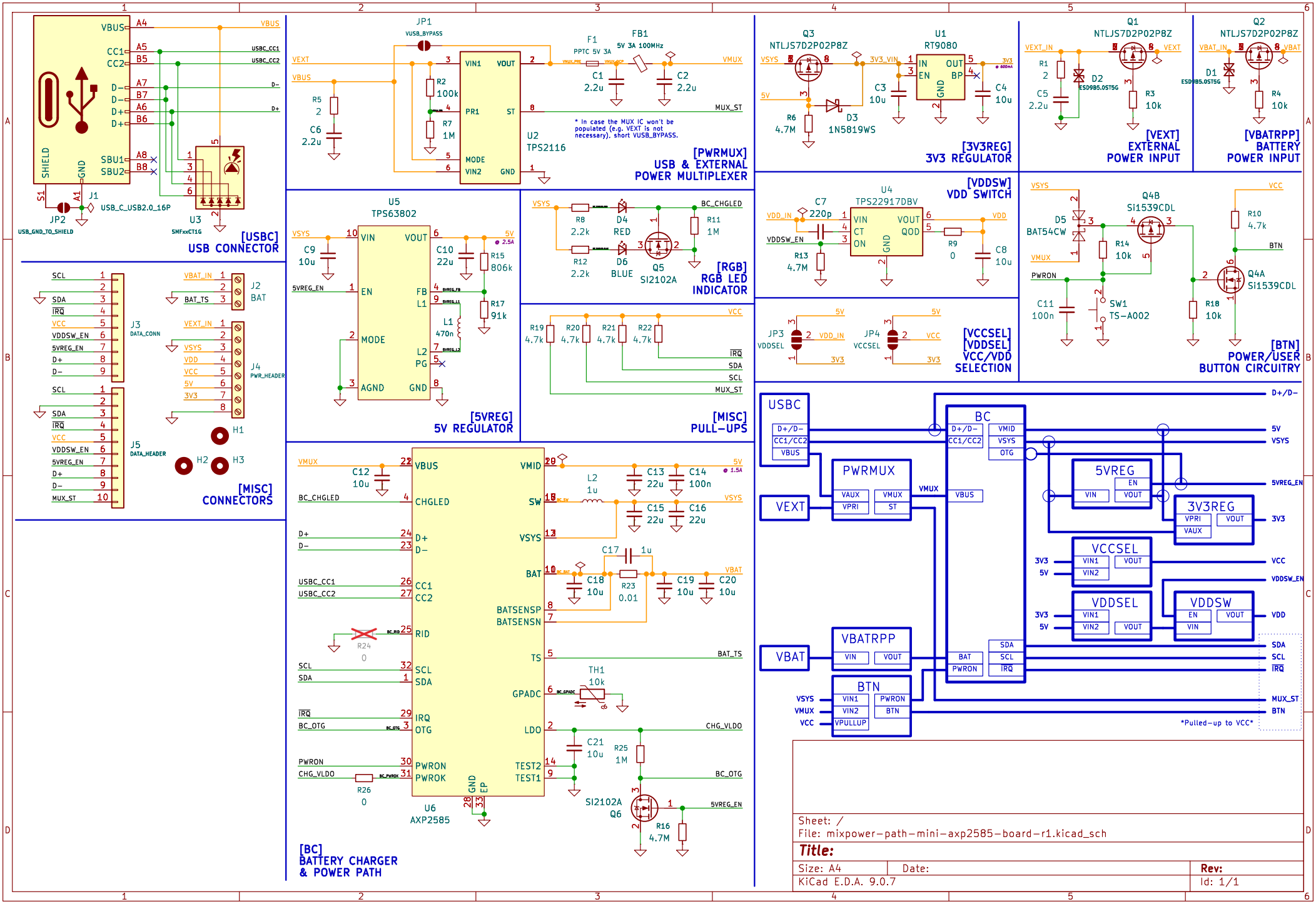
[USBC]
USB CONNECTOR
J1
USB_C_USB2.0_16P
JP2
USB_GND_TO_SHIELD
U3
SMFxxCT1G
[PWRMUX]
USB & EXTERNAL
POWER MULTIPLEXER
JP1
VUSB_BYPASS
F1
PPTC 5V 3A
FB1
5V 3A 100MHz
U2
TPS2116
* In case the MUX IC won't be populated (e.g. VEXT is not necessary), short VUSB_BYPASS.
[3V3REG]
3V3 REGULATOR
Q3
NTLJS7D2P02P8Z
U1
RT9080
D3
1N5819WS
[VEXT]
EXTERNAL
POWER INPUT
Q1
NTLJS7D2P02P8Z
D2
ESD9B5.0ST5G
[VBATRPP]
BATTERY
POWER INPUT
Q2
NTLJS7D2P02P8Z
D1
ESD9B5.0ST5G
[VDDSW]
VDD SWITCH
U4
TPS22917DBV
[VCCSEL]
[VDDSEL]
VCC/VDD
SELECTION
JP3
VDDSEL
JP4
VCCSEL
[BTN]
POWER/USER
BUTTON CIRCUITRY
Q4B
Si1539CDL
Q4A
Si1539CDL
D5
BAT54CW
SW1
TS-A002
[5VREG]
5V REGULATOR
U5
TPS63802
[RGB]
RGB LED
INDICATOR
D4
RED
D6
BLUE
Q5
SI2102A
[MISC]
PULL-UPS
[MISC]
CONNECTORS
J2
BAT
J3
DATA_CONN
J4
PWR_HEADER
J5
DATA_HEADER
[BC]
BATTERY CHARGER
& POWER PATH
U6
AXP2585
SI2102A
Q6
TH1
10k
USBC
PWRMUX
VEXT
BC
5VREG
3V3REG
VCCSEL
VDDSEL
VDDSW
VBAT
VBATRPP
BTN
Pulled-up to VCC
Sheet: /
File: mixpower-path-mini-axp2585-board-r1.kicad_sch
Title:
Size: A4
Date:
Rev:
KiCad E.D.A. 9.0.7
Id: 1/1