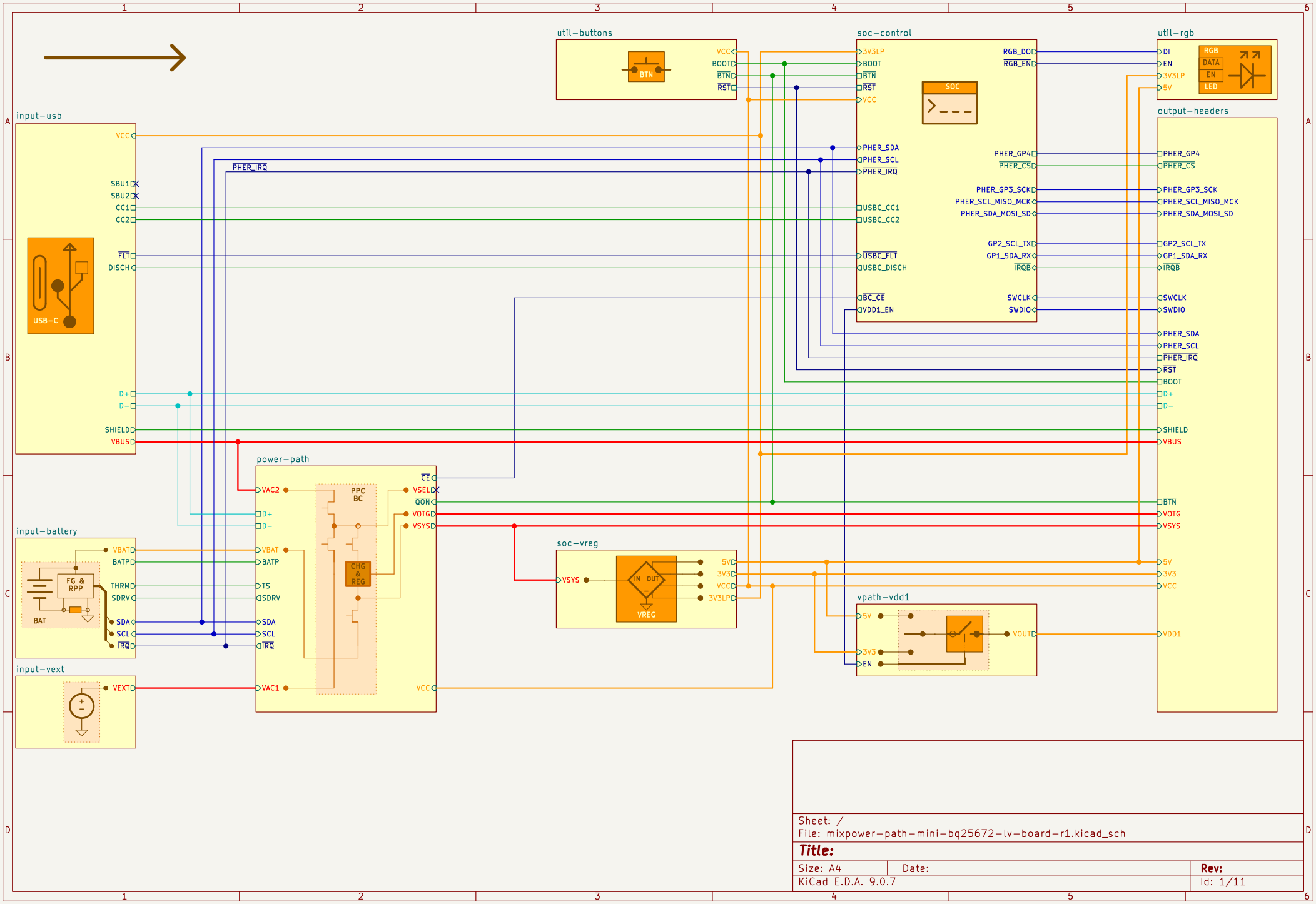

Sheet: /
File: mixpower-path-mini-bq25672-lv-board-r1.kicad_sch

Title:

Size: A4	Date:	Rev:
KiCad E.D.A. 9.0.7		Id: 1/11

[input-usb] USB-C Connector: Protections, Filter and VUSB Discharge

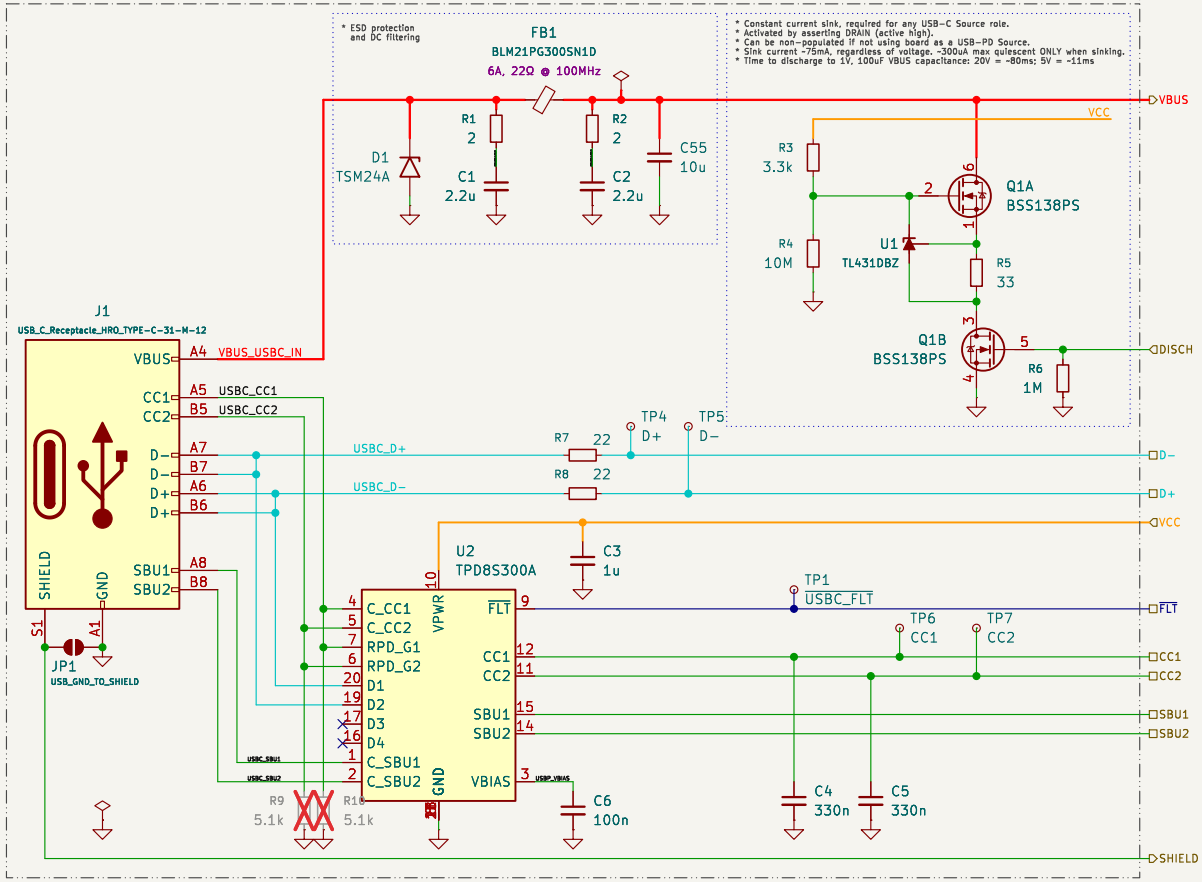

Sheet: /input-usb/
File: input-usb.kicad_sch

Title:

Size: A4	Date:	Rev:
KiCad E.D.A. 9.0.7		Id: 2/11

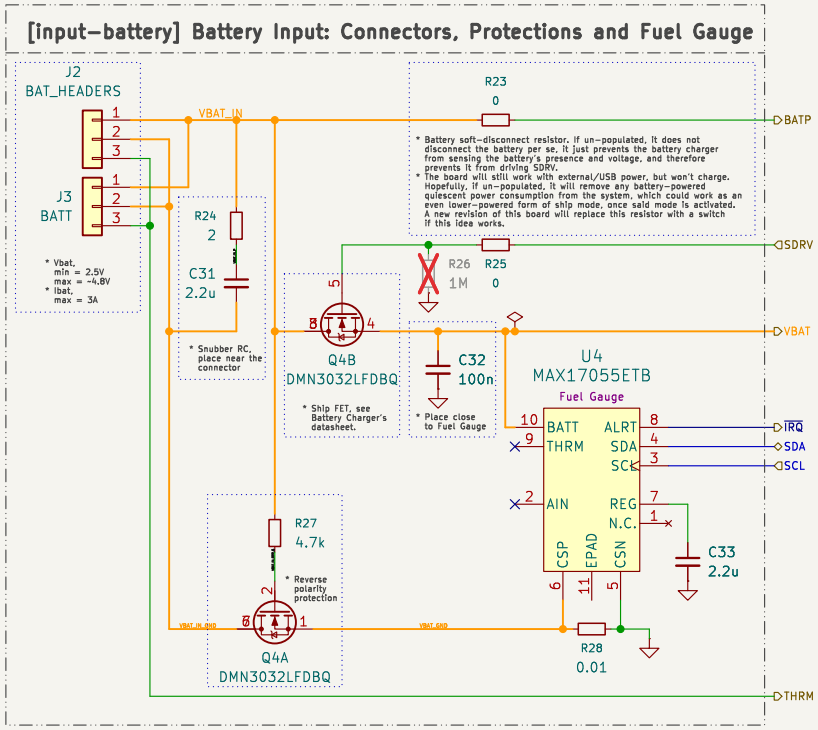

Sheet: /input-battery/
File: input-battery.kicad_sch

Title:

Size: A4	Date:	**Rev:**
KiCad E.D.A. 9.0.7		Id: 3/11

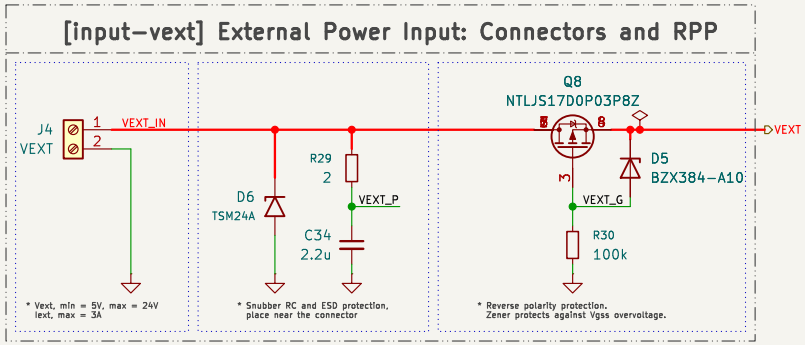

Sheet: /input-vext/
File: input-vext.kicad_sch

Title:

Size: A4	Date:	**Rev:**
KiCad E.D.A. 9.0.7		Id: 4/11

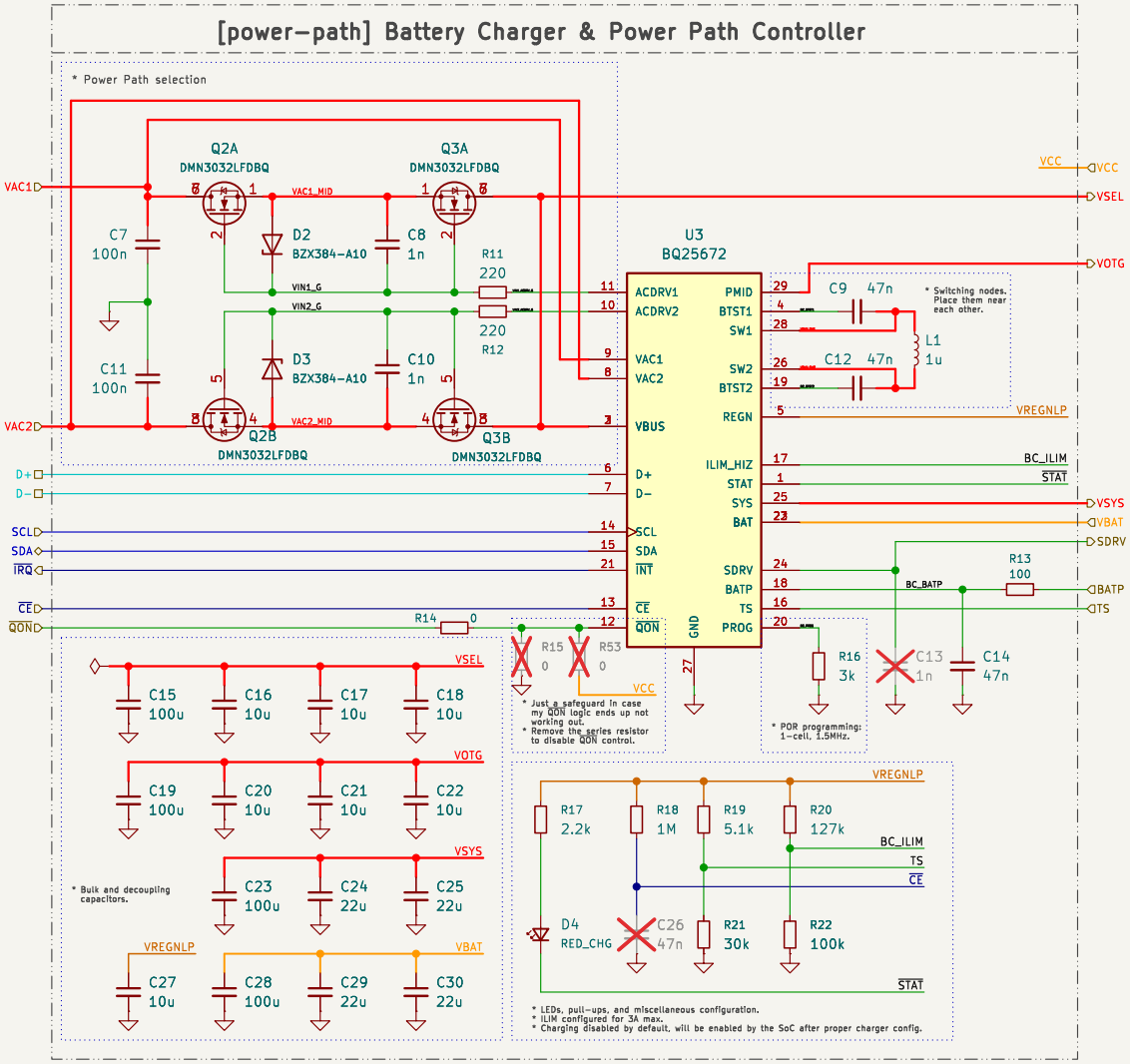

Sheet: /power-path/
File: power-path.kicad_sch

Title:

Size: A4	Date:	Rev:
KiCad E.D.A. 9.0.7		Id: 5/11

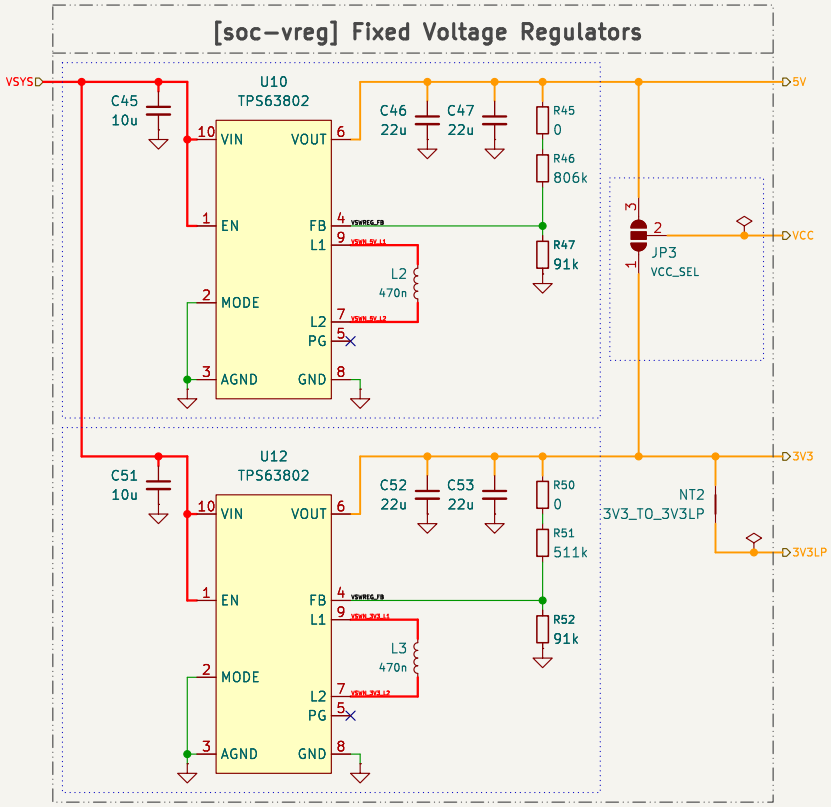

Sheet: /soc-vreg/
File: soc-vreg.kicad_sch

Title:

Size: A4	Date:	**Rev:**
KiCad E.D.A. 9.0.7		Id: 6/11

[util-button] On-board Control Buttons and Smart RESET

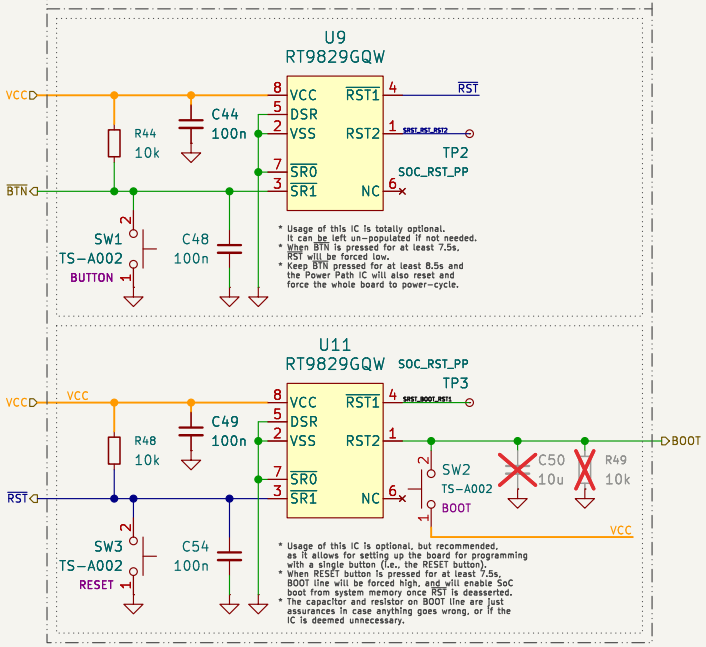

Sheet: /util-buttons/
File: util-buttons.kicad_sch

Title:

Size: A4	Date:	**Rev:**
KiCad E.D.A. 9.0.7		Id: 7/11

Q10B
BSS84AKS

[soc-control] Microcontroller and USB-C PD Interface

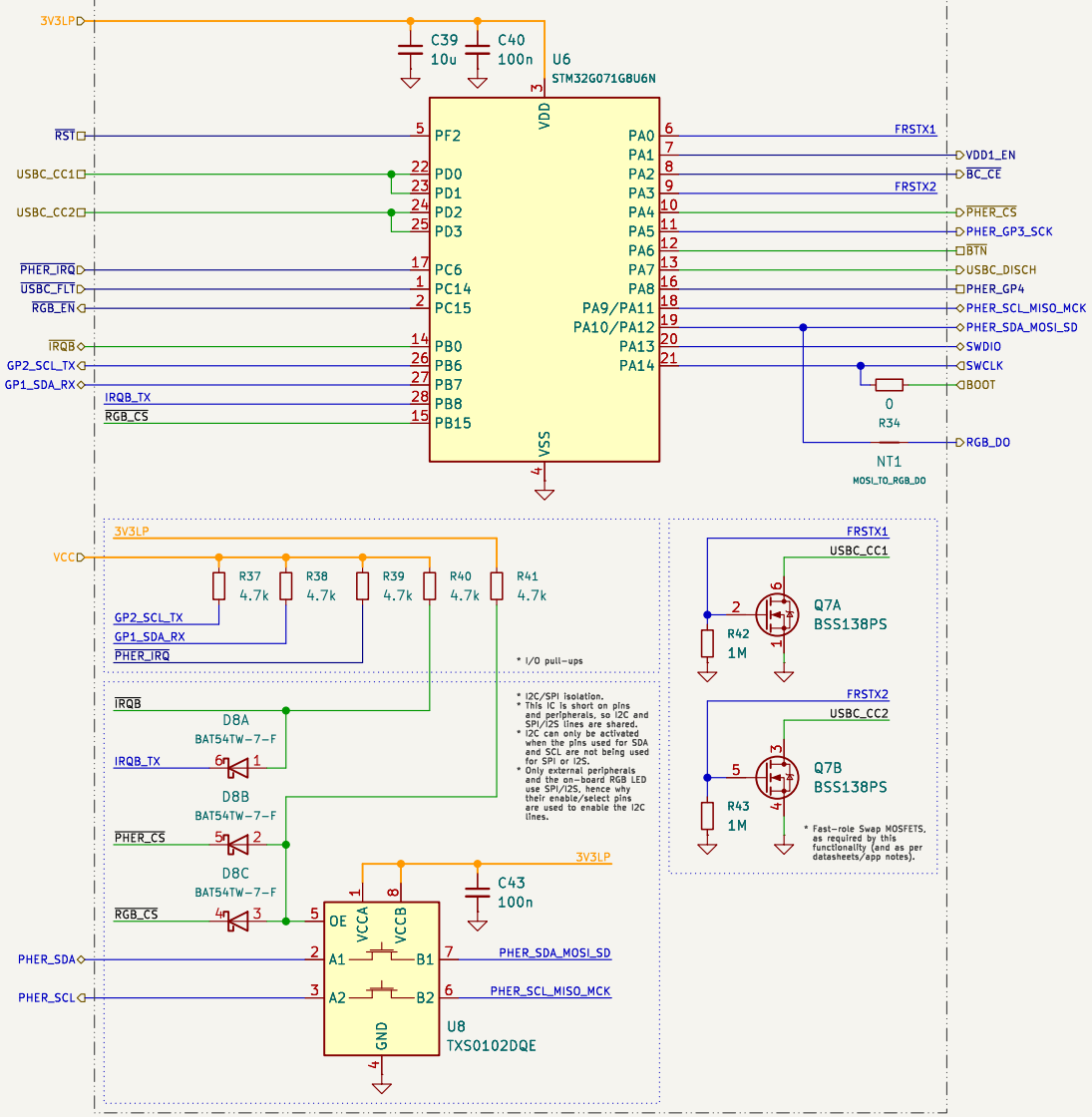

* Two main buses are routed throughout the board:

  - USER: The USER bus is focused on controlling the board itself (SoC/MCU), e.g. setting up configuration, issuing commands, retrieving collected data, etc. This can be a multi-master bus, when cofugired as I2C. Also, as a rule, in this bus, the board (SoC/MCU) acts as a SLAVE, but depending on the mode of operation, this bus can be used as a secondary PHER bus.

  - PHER: The Pheripheral bus is where the devices the board controls directly are located; e.g. the fuel gauge, battery charger, miscellaneous devices like screens or EEPROMs, etc. For this bus, the board (SoC/MCU) acts strictly as a MASTER. Due to the way it's routed, the PHER can never safely be a multi-master bus when configured as I2C.

* The board operates in two distinct and fixed modes, programmable at the firmware level:

  - STANDALONE: The board is meant to run without supervision. It will be configured by default in SoC/MCU firmware, or if enabled, interactively via a pre-specified "HAT" (if supported; e.g. additional EEPROM storage, screen with buttons, etc.). In this mode, the board acts as MASTER in both USER and PHER buses.

  - MANAGED: The board is meant to be controlled by a host system. The board acts as a MASTER in the PHER bus, and as a SLAVE in the USER bus.

* Both buses support specific communication modes, selectable at firmware level:

  - USER: I2C or UART.
  - PHER: I2C, SPI or I2S.

  See Pinouts on the table to the side.

* A secondary bus is derived from the PHER bus, the PHER_I2C (PHER_SDA and PHER_SCL). The lines in PHER_I2C bus are isolated by a level shifter, and enabled only when PHER_EN is deasserted (i.e. at 3.3V). I2C devices meant to be connected to the PHER bus MUST connect through PHER_I2C.

* For the USER bus, Pull-ups are always present, and pull to VCC, which can be either 3.3V or 5V depending on physical board configuration. However, PHER is nominally a 3.3V bus, and therefore has pull-ups to 3.3V (e.g. I2C). To the SoC/MCU all lines are 5V-tolerant, however, try to avoid presenting 5V on the PHER bus.

USER Bus				
OS Port Name	Bus Type	Bus Line	Schematic Node	MCU Pin
user1_i2c1	I2C	SCL	GP2_SCL_TX	PB6 (26)
		SDA	GP1_SDA_RX	PB7 (27)
user1_usart1	USART	TX	GP2_SCL_TX	PB6 (26)
		RX	GP1_SDA_RX	PB7 (27)

PHER Bus				
OS Port Name	Bus Type	Bus Line	Schematic Node	MCU Pin
pher1_i2c2	I2C	SCL	PHER_SDA_MOSI_SD	PB6 (26)
		SDA	PHER_SCL_MISO_MCK	PB7 (27)
		CS (active low)	~(PHER_EN | RGB_CS)	–
pher1_spi1	SPI	MOSI	PHER_SDA_MOSI_SD	PA10 (19)
		MISO	PHER_SCL_MISO_MCK	PA9 (18)
		SCK	PHER_SCK	PA5 (11)
		CS (active low)	PHER_EN	PA4 (10)
pher1_i2s1	I2S	SD	PHER_SDA_MOSI_SD	PA10 (19)
		MCK	PHER_SCL_MISO_MCK	PA9 (18)
		WS	PHER_SCK	PA5 (11)
		CS (active low)	PHER_EN	PA4 (10)
pher1_spi1_rgb	SPI	MOSI	PHER_SDA_MOSI_SD	PA10 (19)
		MISO (unused)	PHER_SCL_MISO_MCK	PA9 (18)
		SCK (unused)	PHER_SCK	PA5 (11)
		CS (active low)	RGB_CS (will also assert RGB_EN)	PC15 (15)

Sheet: /soc-control/
File: soc-control.kicad_sch

Title:

Size: A4	Date:	**Rev:**
KiCad E.D.A. 9.0.7		Id: 8/11

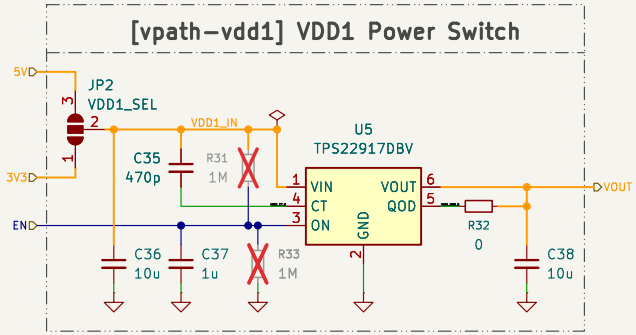

Sheet: /vpath-vdd1/
File: vpath-vdd1.kicad_sch

Title:

Size: A4	Date:	**Rev:**
KiCad E.D.A. 9.0.7		Id: 9/11

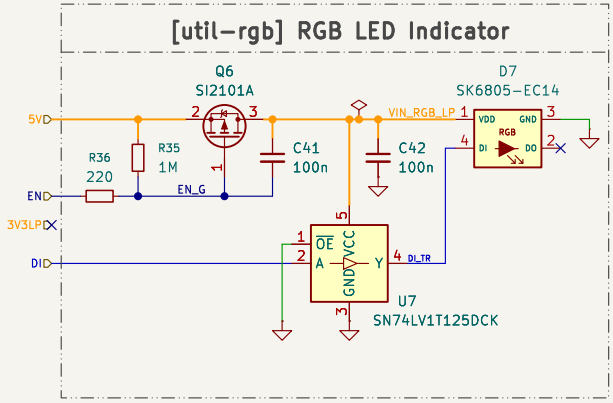

Sheet: /util-rgb/
File: util-rgb.kicad_sch

Title:

Size: A4	Date:	**Rev:**
KiCad E.D.A. 9.0.7		Id: 10/11

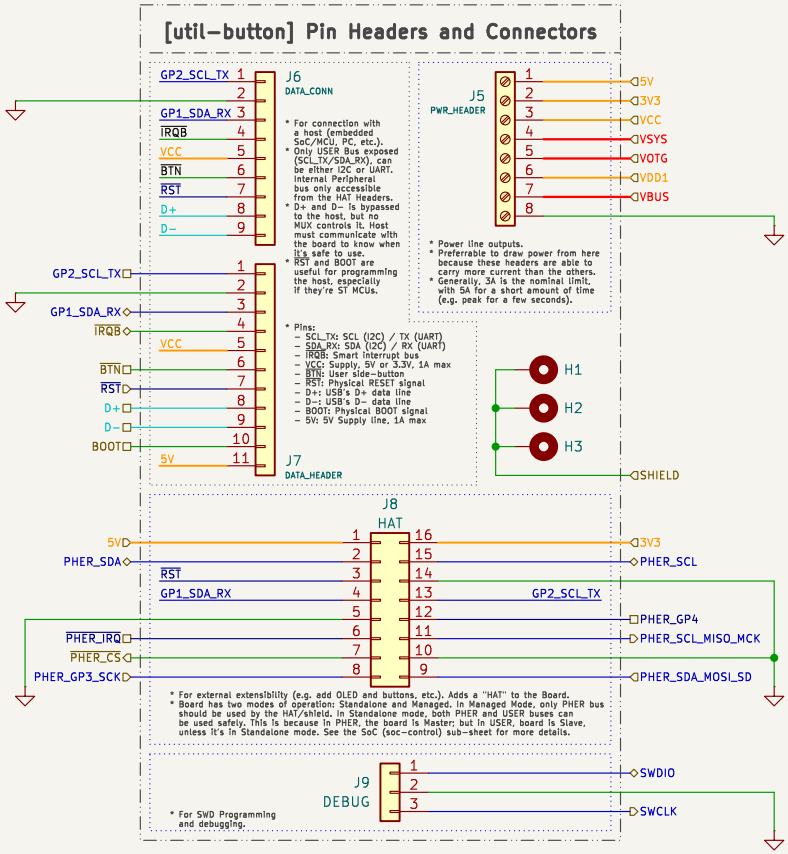

Sheet: /output-headers/
File: output-headers.kicad_sch

Title:

Size: A4	Date:	Rev:
KiCad E.D.A. 9.0.7		Id: 11/11