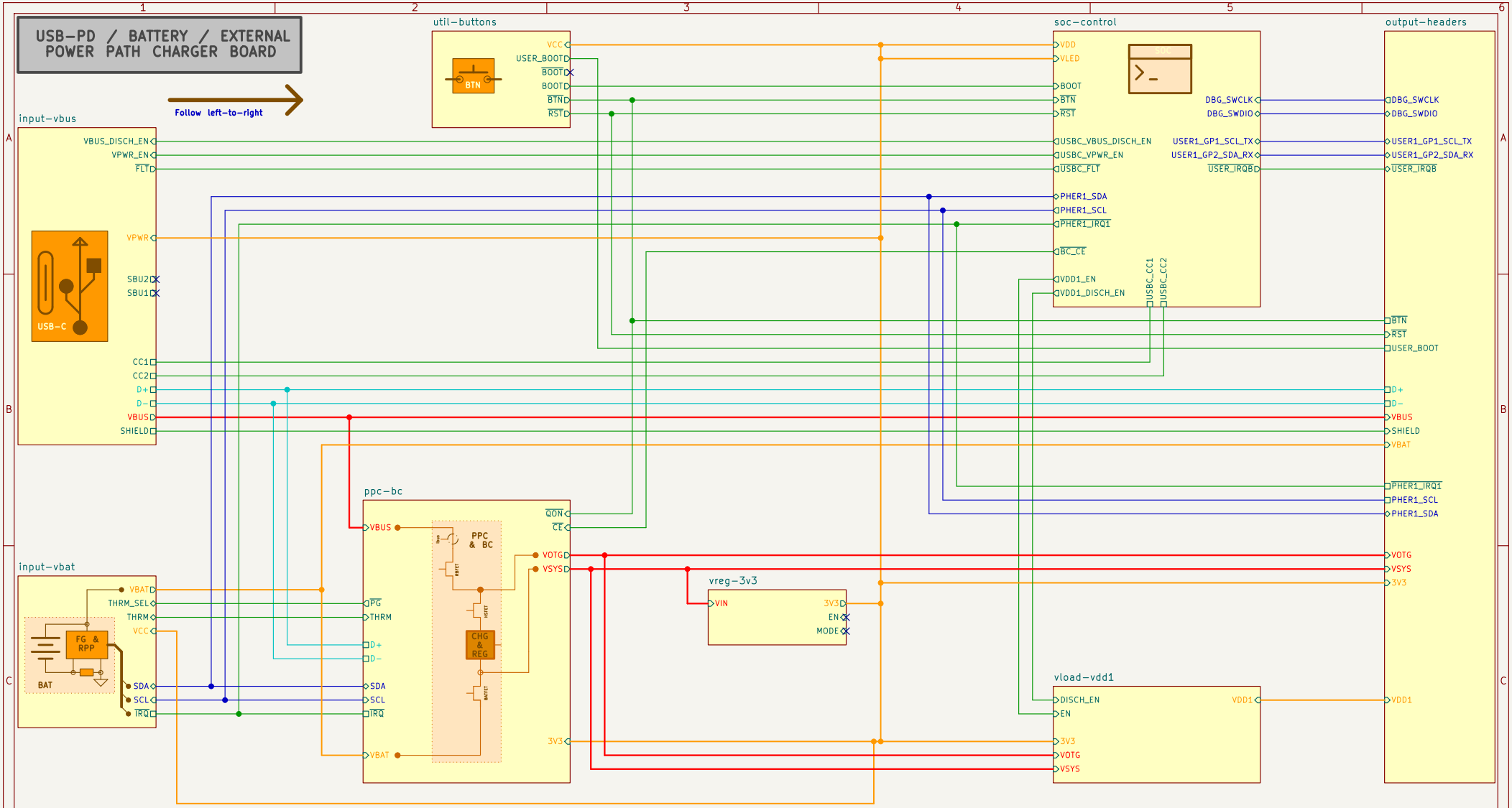

* On battery, 5V can only be provided by OTG mode.
* ADC enablement is necessary only for measurement of voltages (VBUS, VBAT) and currents (IBUS and IBAT).

ESTIMATED QUIESCENTS ON BATTERY ONLY				
Section	Component	Iq (No OTG, No ADC)	Iq (No OTG, ADC)	Iq (OTG)
input-vbat	FS312F-G/DW01A	3 uA	3 uA	3 uA
input-vbat	MAX17055	7 uA	7 uA	7 uA
input-vbat	Passives	0 uA	0 uA	0 uA
input-vbat	3157DBV	0.6uA	0.6uA	0.6uA
input-vbus	TPD8S300A	0 (disabled)	0 (disabled)	0 (disabled)
util-button	RT9829 (x2)	4uA	4uA	4uA
vreg-3v3	TPS63802	11uA	11uA	11uA
ppc-bc	TPS25620	1.5uA	260uA	250uA
vload-vdd1	Passives, enabled, 5V	5uA	5uA	5uA
mcu-control	STM32G071 (Stop 1)	4.1uA	4.1uA	4.1uA
	TOTAL	**36.2 uA**	**294.7uA**	**284.7uA**

Sheet: /
File: mixpower-path-nano-bq25620-board-r1.kicad_sch

Title: mixpower-path-nano-bq25620-board

Size: A4 | Date: 2026-04-05 | **Rev: R1**
KiCad E.D.A. 10.0.0 | Id: 1/9

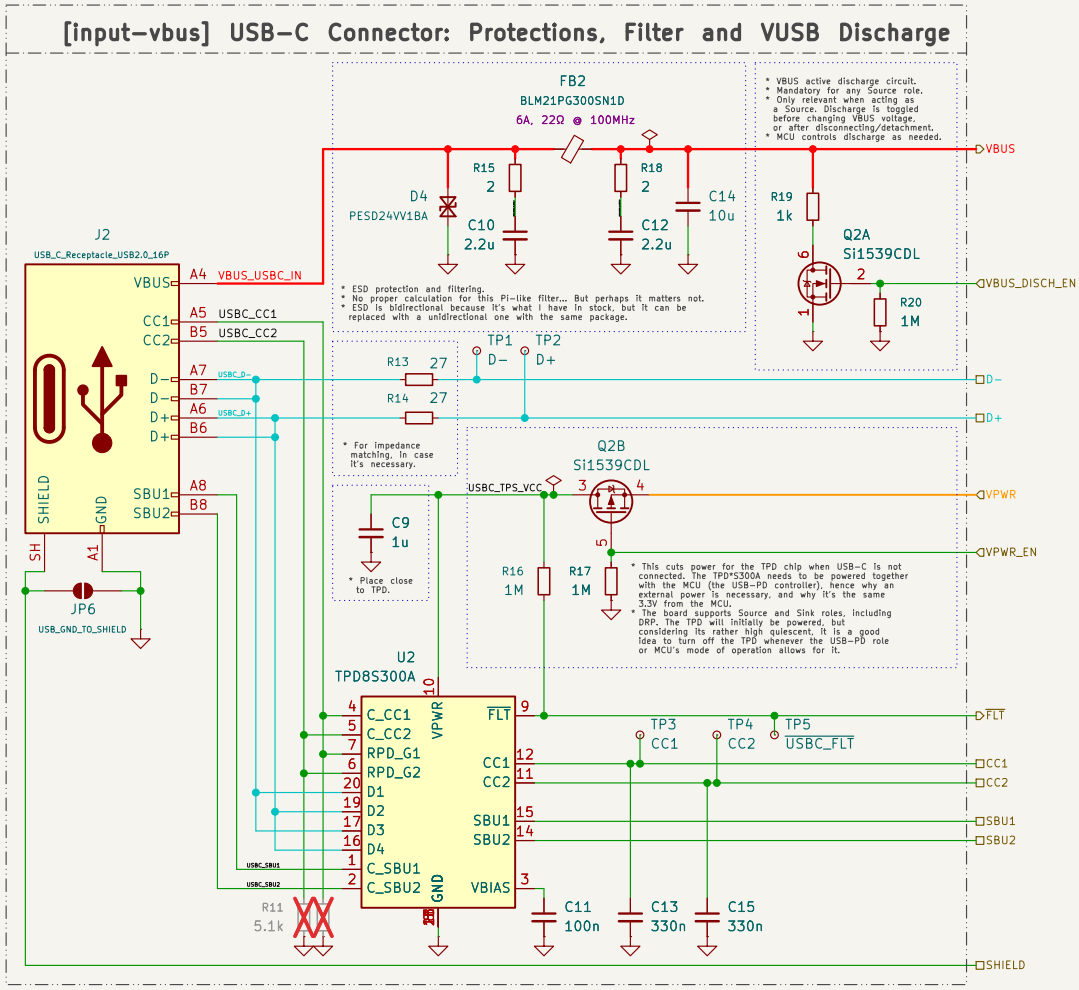

Sheet: /input-vbus/
File: subsheet_input-vbus.kicad_sch

Title: mixpower-path-nano-bq25620-board

Size: A4	Date: 2026-04-05	Rev: R1
KiCad E.D.A. 10.0.0		Id: 2/9

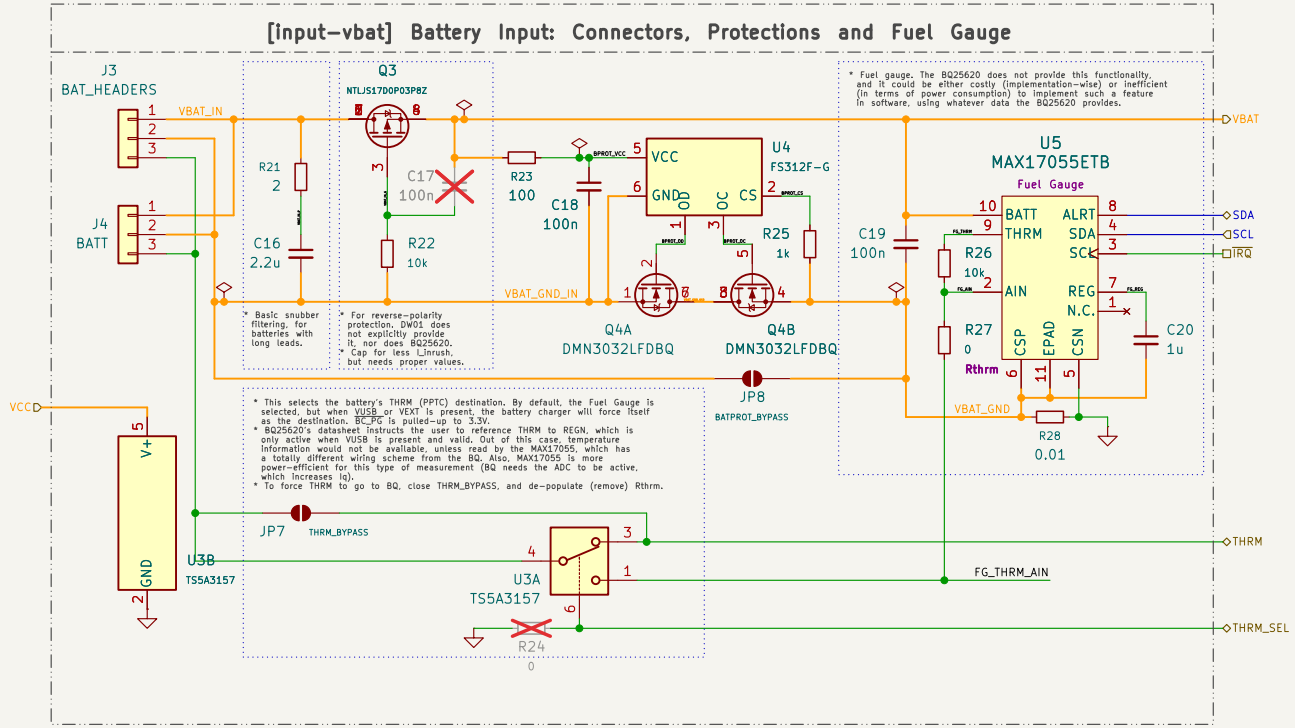

Sheet: /input-vbat/
File: subsheet_input-vbat.kicad_sch

Title: mixpower-path-nano-bq25620-board

Size: A4	Date: 2026-04-05	Rev: R1
KiCad E.D.A. 10.0.0		Id: 3/9

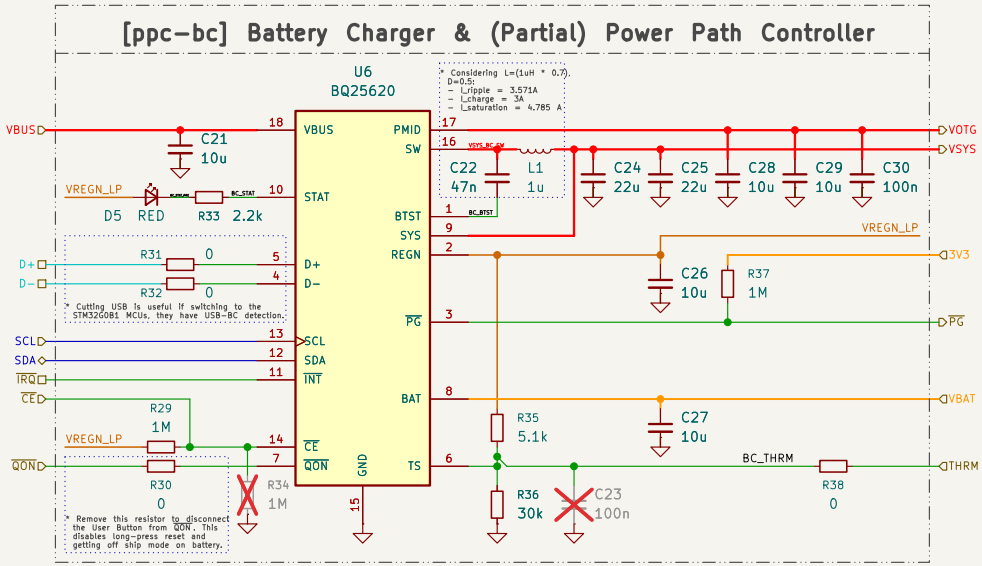

Sheet: /ppc-bc/
File: subsheet__ppc-bc.kicad_sch

Title: mixpower-path-nano-bq25620-board

Size: A4	Date: 2026-04-05	Rev: R1
KiCad E.D.A. 10.0.0		Id: 4/9

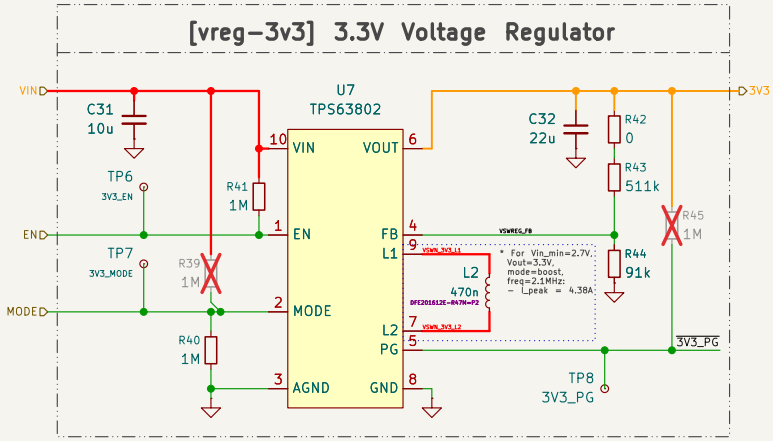

Sheet: /vreg-3v3/
File: subsheet__vreg-3v3.kicad_sch

Title: mixpower-path-nano-bq25620-board

Size: A4	Date: 2026-04-05	Rev: R1
KiCad E.D.A. 10.0.0		Id: 5/9

[util-button] On-board Control Buttons and Smart RESET

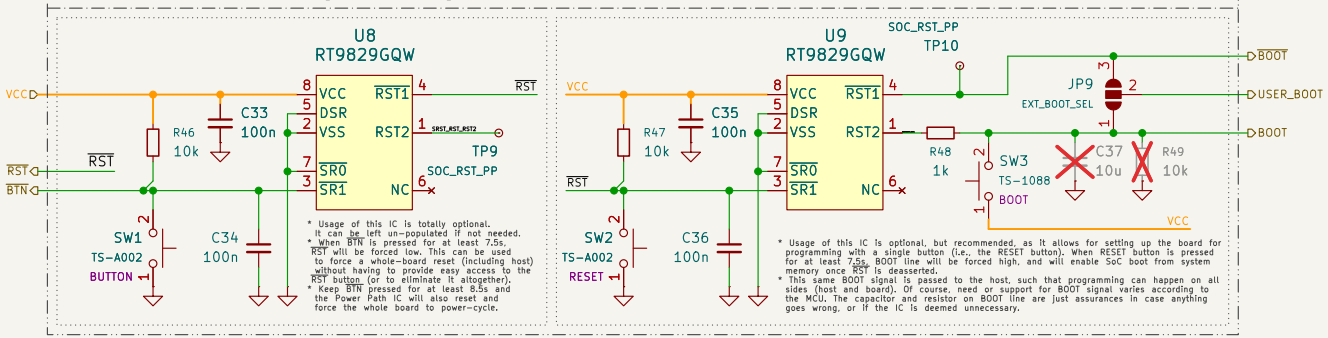

Sheet: /util-buttons/
File: subsheet_util-buttons.kicad_sch

Title: mixpower-path-nano-bq25620-board

Size: A4	Date: 2026-04-05	**Rev: R1**
KiCad E.D.A. 10.0.0		Id: 6/9

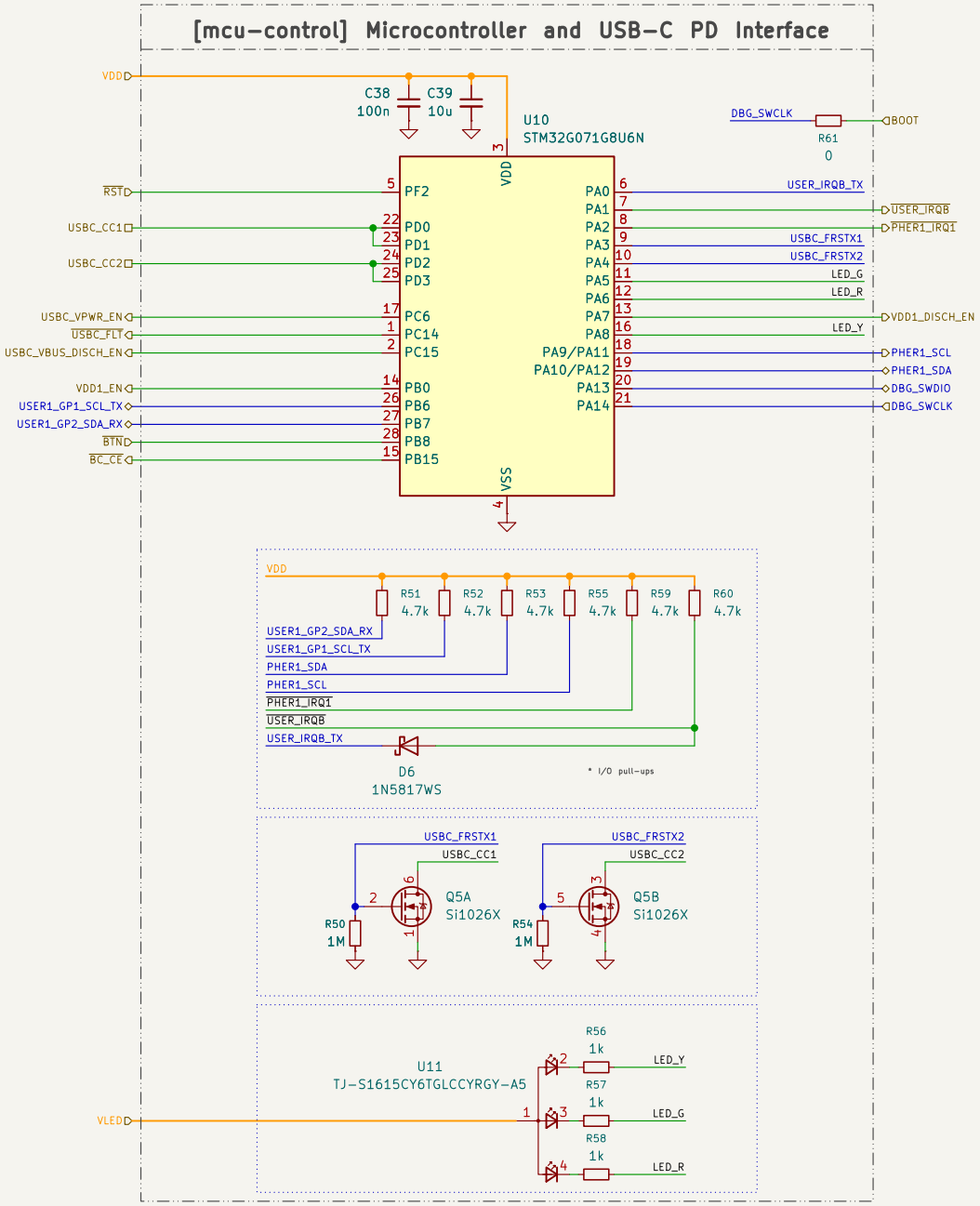

* Two main LOGICAL buses are routed throughout the board:

  - USER: The USER bus is focused on controlling the board itself (SoC/MCU), e.g. setting up configuration, issuing commands, retrieving collected data, etc. It has a single physical bus with at most two wires, and can be multi-protocol (one chosen at a time). It can be a multi-master bus, when configured as I2C.

    As a rule, in this bus, the board (SoC/MCU) acts as a SLAVE, but depending on the mode of operation, the bus can be used as a secondary PHER bus, or it can be just converted to simple GPIOs.

  - PHER: The Pheripheral bus is where the devices the board controls directly are located; e.g. the fuel gauge, battery charger, miscellaneous devices like screens or EEPROMs, etc. For this bus, the board (SoC/MCU) acts strictly as a MASTER, but it can be configured to be multi-master. It is I2C-only.

* The board operates in two distinct and fixed modes, programmable at the firmware level:

  - STANDALONE: The board is meant to run without supervision. It will be configured by default in SoC/MCU firmware, or if enabled, interactively via a pre-specified "HAT" (if supported; e.g. additional EEPROM storage, screen with touch or buttons, etc.). In this mode, the board acts as MASTER in both USER and PHER buses.

  - MANAGED: The board is meant to be controlled by a host system. The board acts as a MASTER in the PHER bus, and as a SLAVE in the USER bus.

* The physical buses for PHER/USER support specific bus types, selectable at firmware level:

  - USER1: I2C or UART.
  - PHER1: I2C.

  External strong pull-ups are always present, and pull to 3.3V.
  See Pinouts on the table below.

* To the MCU all lines are 5V-tolerant except for pins PA4 and PA5. However, try to avoid presenting 5V on any non-5V bus.

* If the MCU is configured to sleep at Standby level, it will only wake up on $\overline{\text{PHER1_IRQ1}}$ or $\overline{\text{USER_IRQB}}$ assertion (low-level, on falling edge). The pins PA0 and PA2 are configured as system wake-up pins at firmware level.

* The $\overline{\text{BTN}}$ is the general purpose User Button. It can be used by the host for any purpose. The MCU can be configured to capture when it's pressed and perform operations (e.g. notify the host, change PDOs, etc. Because it's connected to BQ25620's ~QON), it also gets the board off Ship mode (if battery is present), or force a reset if pressed for 8.5 seconds.

USER Bus				
OS Port Name	Bus Type	Bus Line	Schematic Node	MCU Pin
user1_i2c1	I2C	SDA	USER1_GP2_SDA_RX	PB7 (27)
		SCL	USER1_GP1_SCL_TX	PB6 (26)
user1_usart1	USART	RX	USER1_GP2_SDA_RX	PB7 (27)
		TX	USER1_GP1_SCL_TX	PB6 (26)

PHER Bus				
OS Port Name	Bus Type	Bus Line	Schematic Node	MCU Pin
pher1_i2c2	I2C	SCL	PHER1_SCL	PA9 (18)
		SDA	PHER1_SDA	PA10 (19)

Sheet: /soc-control/
File: subsheet__soc-control.kicad_sch

Title: mixpower-path-nano-bq25620-board

Size: A4	Date: 2026-04-05	**Rev: R1**
KiCad E.D.A. 10.0.0		Id: 7/9

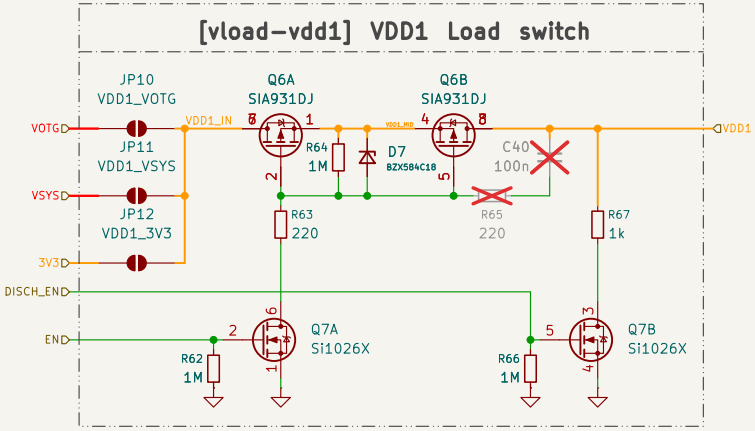

Sheet: /vload-vdd1/
File: subsheet__vload-vdd1.kicad_sch

Title: mixpower-path-nano-bq25620-board

Size: A4	Date: 2026-04-05	**Rev: R1**
KiCad E.D.A. 10.0.0		Id: 8/9

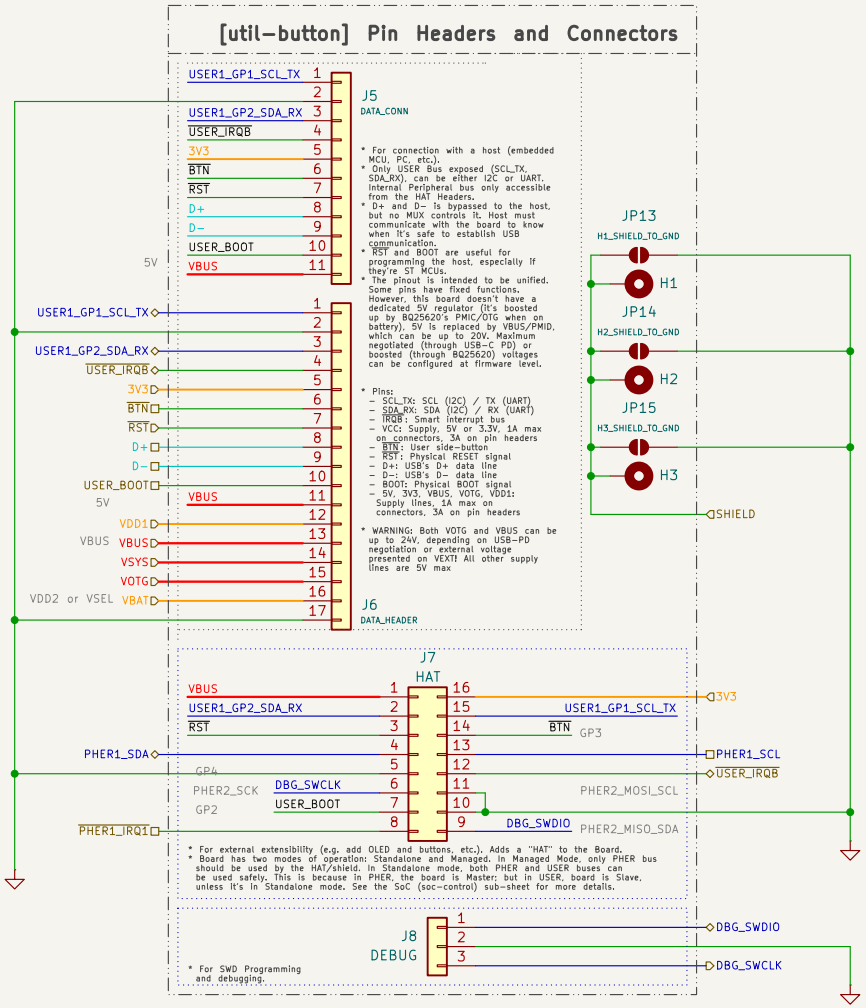

Sheet: /output-headers/
File: subsheet__output-headers.kicad_sch

Title: mixpower-path-nano-bq25620-board

Size: A4	Date: 2026-04-05	Rev: R1
KiCad E.D.A. 10.0.0		Id: 9/9