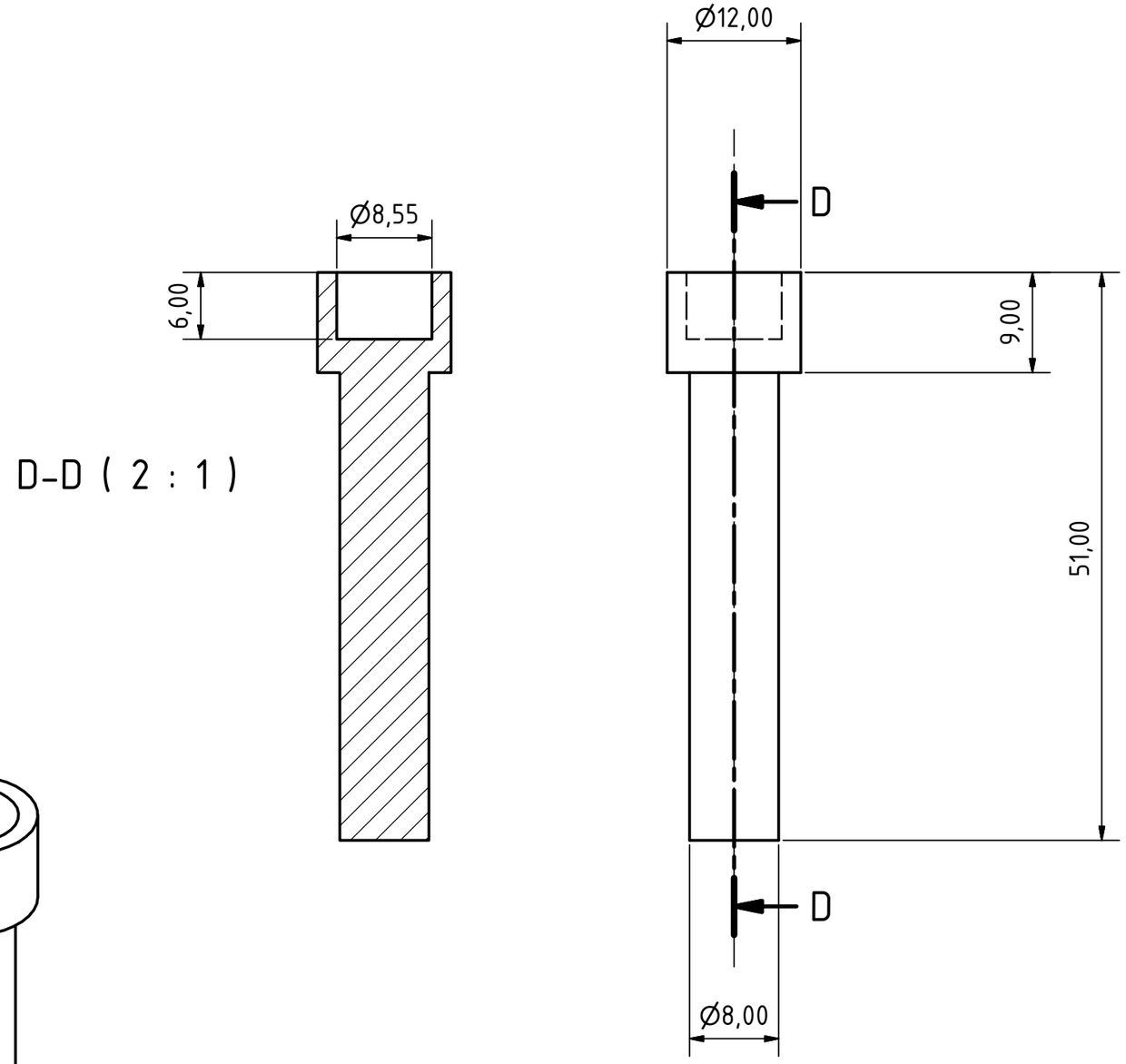

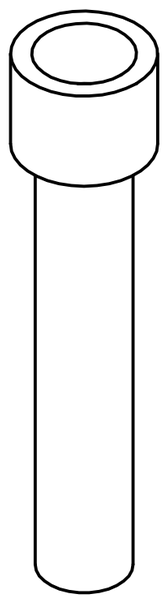

Scale 2:1
All dimensions in mm

	Date	Name
Drawn	06.02.2022	M. Vakili
Checked		
Standard		

State	Changes	Date	Name

General tolerances: ISO 2768-1
Tolerance class: fH (fine)
Material: Aluminium (AlMg3)

TapePresser_01-1

1

A3