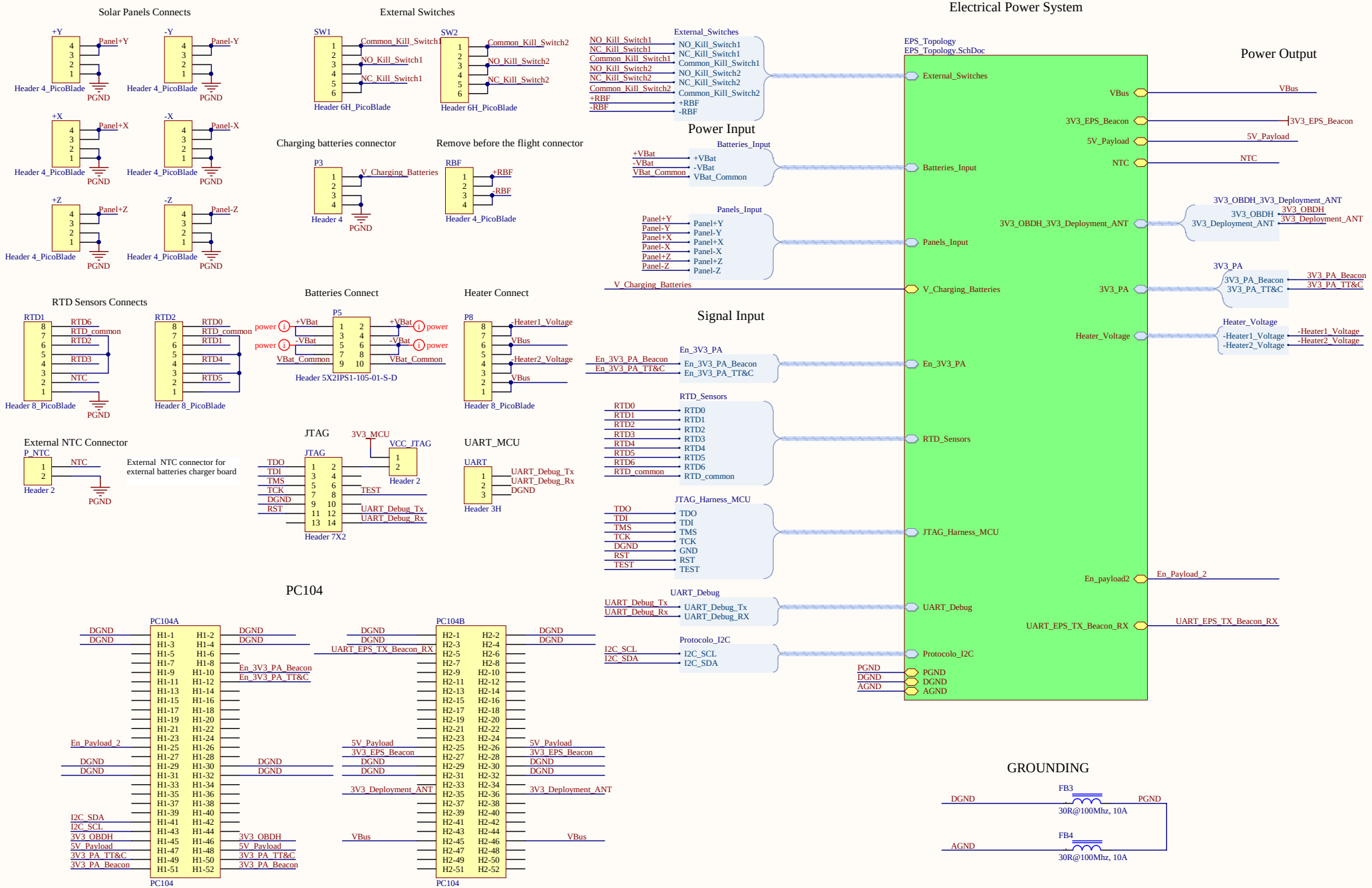
Switches Signal Input
Solar Panels Connects
External Switches
Electrical Power System
Power Output
Power Input
Charging batteries connector
Remove before the flight connector
RTD Sensors Connects
Batteries Connect
Heater Connect
Signal Input
External NTC Connector
External NTC connector for external batteries charger board
JTAG
UART_MCU
PC104
GROUNDING
EPS_Topology
EPS_Topology.SchDoc
Header 4_PicoBlade
Header 6H_PicoBlade
Header 4
Header 5X2IPS1-105-01-S-D
Header 8_PicoBlade
Header 2
Header 7X2
Header 3H
Header 4_PicoBlade
PGND
FB3
FB4
30R@100Mhz, 10A
Title: EPS Interface
Size: A3
Project: FloripaSat
Revision: V2.0
Date: 23/02/2017
Time: 18:23:34
Number: 1
Sheet 1 of 10
Drawn by: Sara Vega
File: EPS_Interface.SchDoc
UFSC - SpaceLab
University Campus - Trindade
Dep. of Electrical Engineering - CTC
Florianópolis, Santa Catarina, Brazil
CEP: 88040-900

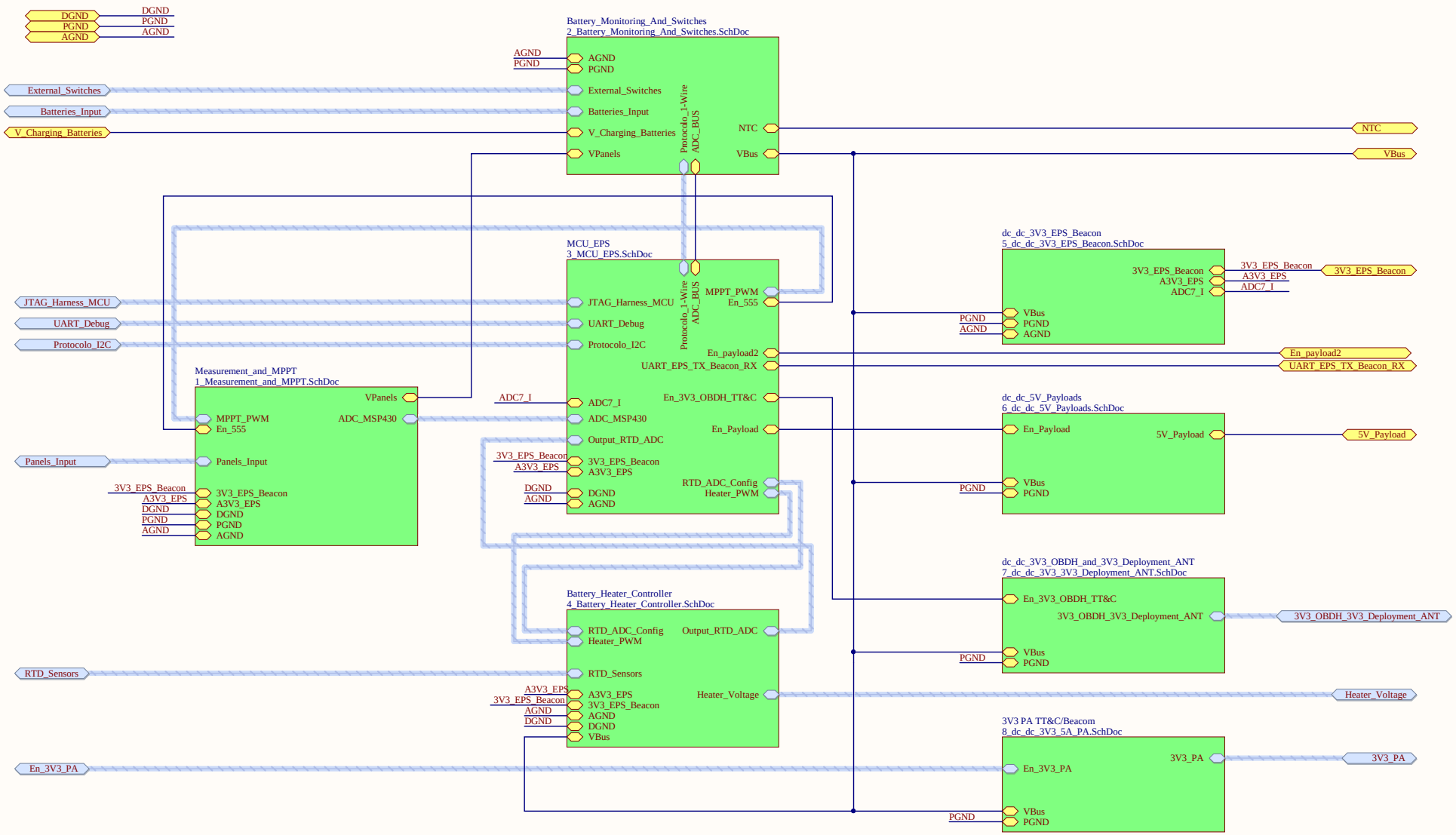

Title: ***EPS Topology***			*UFSC - SpaceLab*
Size: A3	Project: FloripaSat	Revision: V2.0	*University Campus - Trindade*
Date: 23/02/2017	Time: 18:23:34	Number: 2	*Dep. of Electrical Engineering - CTC*
Drawn by: *		Sheet 2 of 10	*Florianópolis, Santa Catarina, Brazil*
		File: EPS_Topology.SchDoc	*CEP: 88040-900*

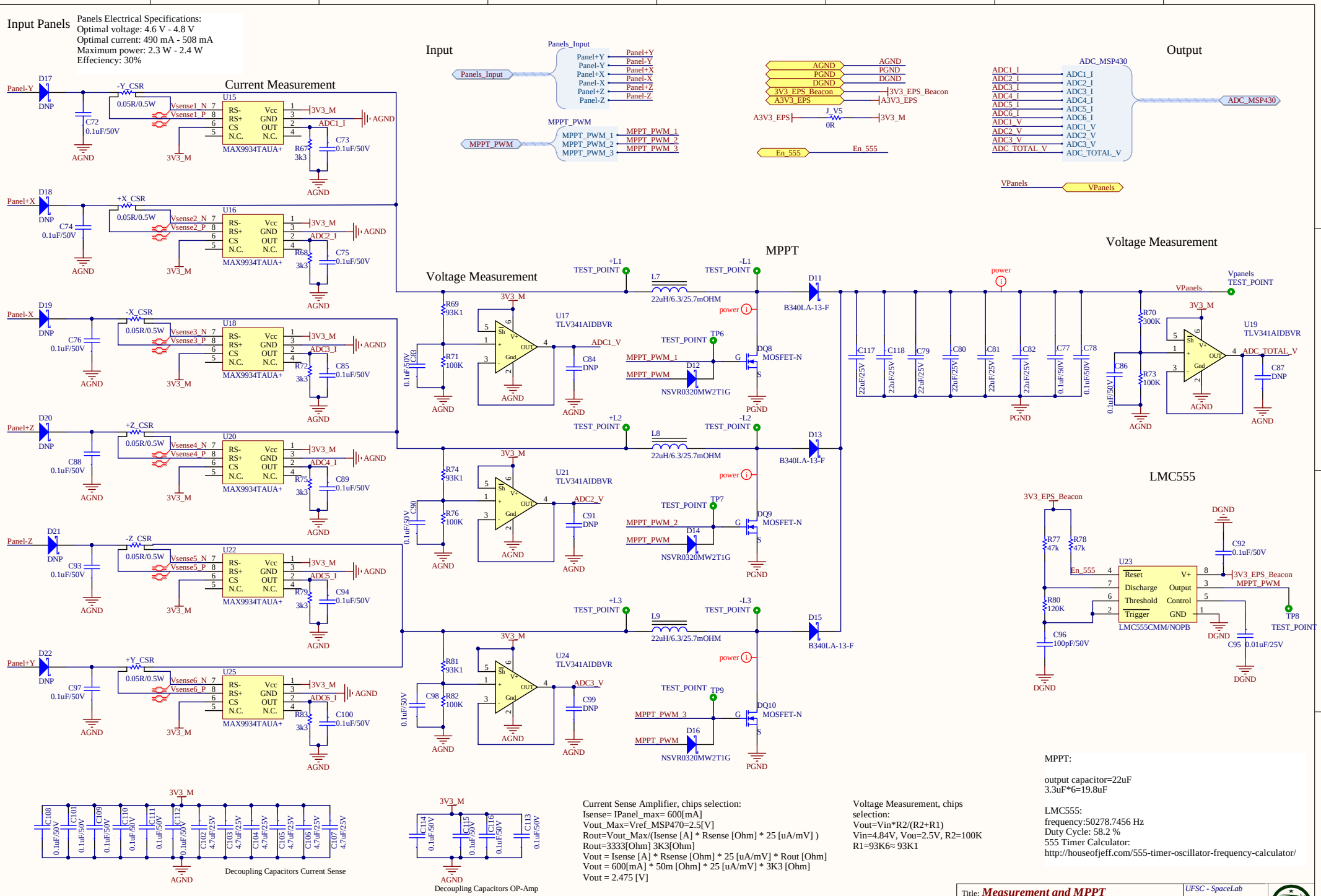
Input Panels
Panels Electrical Specifications:
Optimal voltage: 4.6 V - 4.8 V
Optimal current: 490 mA - 508 mA
Maximum power: 2.3 W - 2.4 W
Effeciency: 30%
Current Measurement
Input
Output
MPPT
Voltage Measurement
LMC555
Panels_Input
MPPT_PWM
ADC_MSP430
U15
U16
U18
U20
U22
U25
MAX9934TAUA+
U17
U21
U24
TLV341AIDBVR
U19
B340LA-13-F
MOSFET-N
NSVR0320MW2T1G
U23
LMC555CMM/NOPB
Decoupling Capacitors Current Sense
Decoupling Capacitors OP-Amp
Current Sense Amplifier, chips selection:
Isense= IPanel_max= 600[mA]
Vout_Max=Vref_MSP470=2.5[V]
Rout=Vout_Max/(Isense [A] * Rsense [Ohm] * 25 [uA/mV])
Rout=3333[Ohm] 3K3[Ohm]
Vout = Isense [A] * Rsense [Ohm] * 25 [uA/mV] * Rout [Ohm]
Vout = 600[mA] * 50m [Ohm] * 25 [uA/mV] * 3K3 [Ohm]
Vout = 2.475 [V]
Voltage Measurement, chips selection:
Vout=Vin*R2/(R2+R1)
Vin=4.84V, Vou=2.5V, R2=100K
R1=93K6≈ 93K1
MPPT:
output capacitor=22uF
3.3uF*6=19.8uF
LMC555:
frequency:50278.7456 Hz
Duty Cycle: 58.2 %
555 Timer Calculator:
http://houseofjeff.com/555-timer-oscillator-frequency-calculator/
Title: Measurement and MPPT
Size: A3
Project: FloripaSat
Revision: V2.1
Date: 23/02/2017
Time: 18:23:34
Number: 3
Sheet 3 of 10
Drawn by: Sara Vega
File: 1_Measurement_and_MPPT.SchDoc
UFSC - SpaceLab
University Campus - Trindade
Dep. of Electrical Engineering - CTC
Florianópolis, Santa Catarina, Brazil
CEP: 88040-900

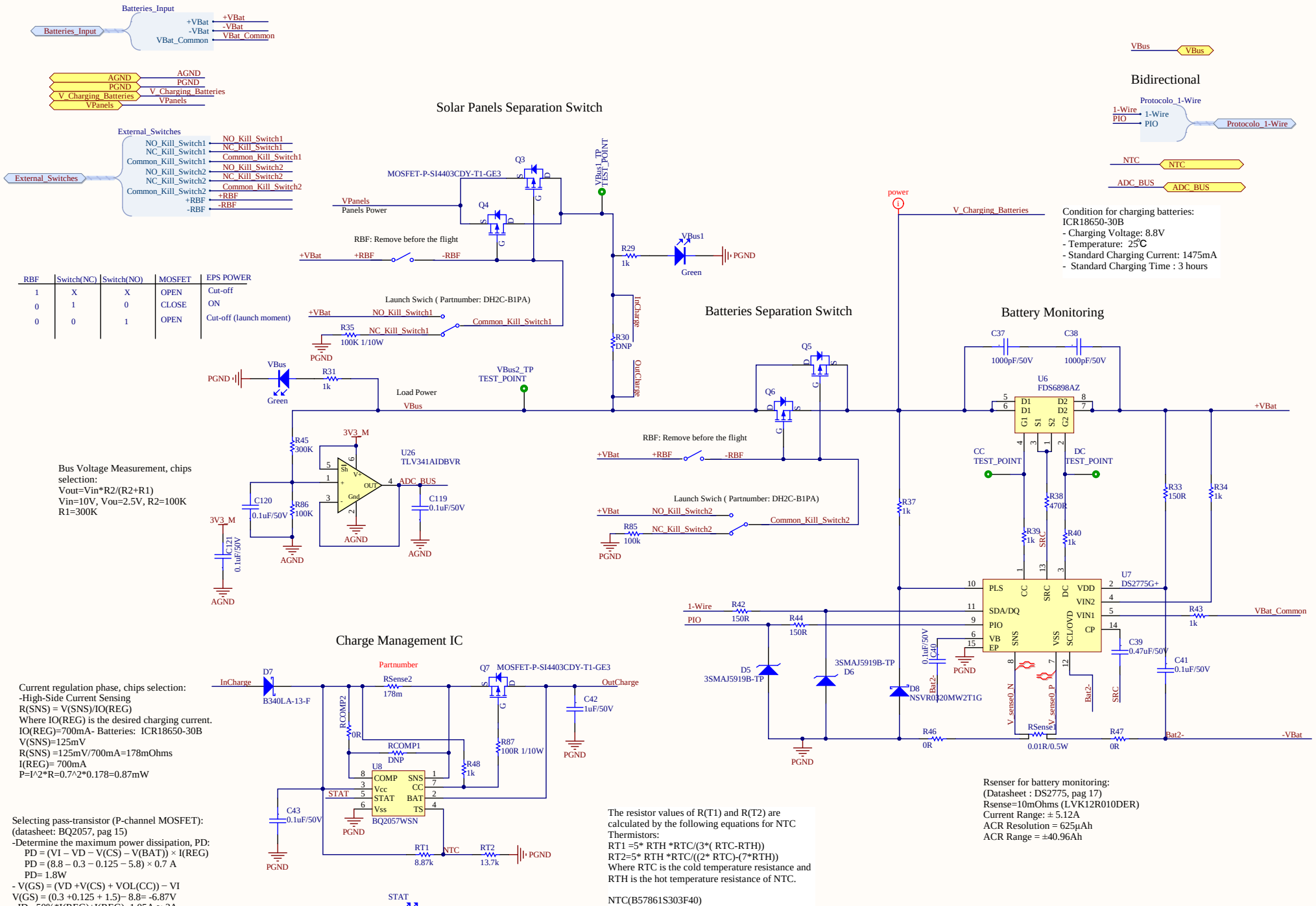
Batteries_Input
+VBat
-VBat
VBat_Common
AGND
PGND
V_Charging_Batteries
VPanels
External_Switches
NO_Kill_Switch1
NC_Kill_Switch1
Common_Kill_Switch1
NO_Kill_Switch2
NC_Kill_Switch2
Common_Kill_Switch2
+RBF
-RBF
Solar Panels Separation Switch
MOSFET-P-SI4403CDY-T1-GE3
Q3
Q4
VPanels
Panels Power
VBus1_TP
TEST_POINT
RBF: Remove before the flight
R29
1k
VBus1
Green
Launch Swich (Partnumber: DH2C-B1PA)
R35
100K 1/10W
InCharge
OutCharge
R30
DNP
Bus Voltage Measurement, chips selection:
Vout=Vin*R2/(R2+R1)
Vin=10V, Vou=2.5V, R2=100K
R1=300K
R31
1k
VBus2_TP
TEST_POINT
Load Power
VBus
R45
300K
3V3_M
U26
TLV341AIDBVR
ADC_BUS
C120
0.1uF/50V
R86
100K
C121
0.1uF/50V
C119
0.1uF/50V
Batteries Separation Switch
Q5
Q6
R85
100k
Bidirectional
Protocolo_1-Wire
1-Wire
PIO
NTC
ADC_BUS
VBus
power
Condition for charging batteries:
ICR18650-30B
- Charging Voltage: 8.8V
- Temperature: 25℃
- Standard Charging Current: 1475mA
- Standard Charging Time : 3 hours
Battery Monitoring
C37
1000pF/50V
C38
1000pF/50V
U6
FDS6898AZ
CC
TEST_POINT
DC
TEST_POINT
R37
1k
R38
470R
R39
1k
R40
1k
R33
150R
R34
1k
U7
DS2775G+
R42
150R
R44
150R
R43
1k
VBat_Common
C39
0.47uF/50V
C41
0.1uF/50V
D5
3SMAJ5919B-TP
3SMAJ5919B-TP
D6
D8
NSVR0120MW2T1G
C40
0.1uF/50V
R46
0R
RSense1
0.01R/0.5W
R47
0R
-VBat
Charge Management IC
Partnumber
D7
B340LA-13-F
RSense2
178m
Q7
MOSFET-P-SI4403CDY-T1-GE3
OutCharge
C42
1uF/50V
RCOMP2
0R
RCOMP1
DNP
R87
100R 1/10W
R48
1k
U8
BQ2057WSN
C43
0.1uF/50V
RT1
8.87k
NTC
RT2
13.7k
STAT
R49
1k
Current regulation phase, chips selection:
-High-Side Current Sensing
R(SNS) = V(SNS)/IO(REG)
Where IO(REG) is the desired charging current.
IO(REG)=700mA- Batteries: ICR18650-30B
V(SNS)=125mV
R(SNS) =125mV/700mA=178mOhms
I(REG)= 700mA
P=I^2*R=0.7^2*0.178=0.87mW
Selecting pass-transistor (P-channel MOSFET):
(datasheet: BQ2057, pag 15)
-Determine the maximum power dissipation, PD:
PD = (VI – VD − V(CS) – V(BAT)) × I(REG)
PD = (8.8 – 0.3 − 0.125 − 5.8) × 0.7 A
PD= 1.8W
- V(GS) = (VD +V(CS) + VOL(CC)) − VI
V(GS) = (0.3 +0.125 + 1.5)− 8.8= -6.87V
- ID= 50%*I(REG)+I(REG)=1.05A ≈-3A
- MOSFET with gate threshold voltage, V(GSth), rating less than the calculated V(GS)
The resistor values of R(T1) and R(T2) are calculated by the following equations for NTC Thermistors:
RT1 =5* RTH *RTC/(3*(RTC-RTH))
RT2=5* RTH *RTC/((2* RTC)-(7*RTH))
Where RTC is the cold temperature resistance and RTH is the hot temperature resistance of NTC.
NTC(B57861S303F40)
RTC=907.8K
RTH=53.490K
RT1=8967.876068≈8.87kOhms
RT2=13654.27751≈13.7kOhms
Rsenser for battery monitoring:
(Datasheet : DS2775, pag 17)
Rsense=10mOhms (LVK12R010DER)
Current Range: ± 5.12A
ACR Resolution = 625µAh
ACR Range = ±40.96Ah
Title: Batteries Monitoring and Power Switches
Size: A3
Project: FloripaSat
Revision: V2.0
Date: 23/02/2017
Time: 18:23:34
Number: 4
Sheet 4 of 10
Drawn by: Sara Vega
File: 2_Battery_Monitoring_And_Switches.SchDoc
UFSC - SpaceLab
University Campus - Trindade
Dep. of Electrical Engineering - CTC
Florianópolis, Santa Catarina, Brazil
CEP: 88040-900

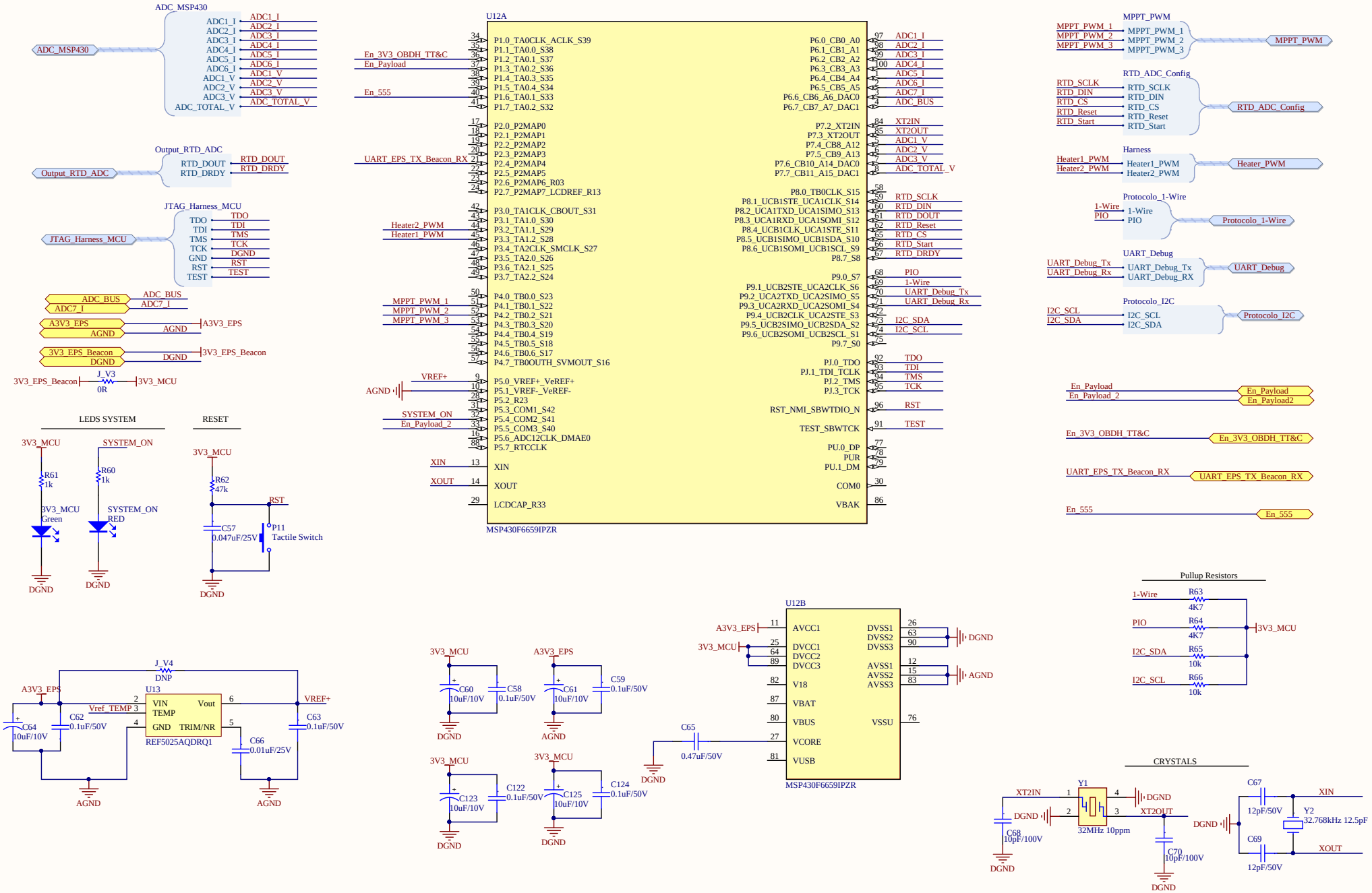

Title: ***EPS MCU Main***		*UFSC - SpaceLab* University Campus - Trindade Dep. of Electrical Engineering - CTC Florianópolis, Santa Catarina, Brazil CEP: 88040-900
Size: A3	Project: FloripaSat	Revision: V2.0
Date: 23/02/2017 Time: 18:23:34	Number: 5	Sheet 5 of 10
Drawn by: Sara Vega		File: 3_MCU_EPS.SchDoc

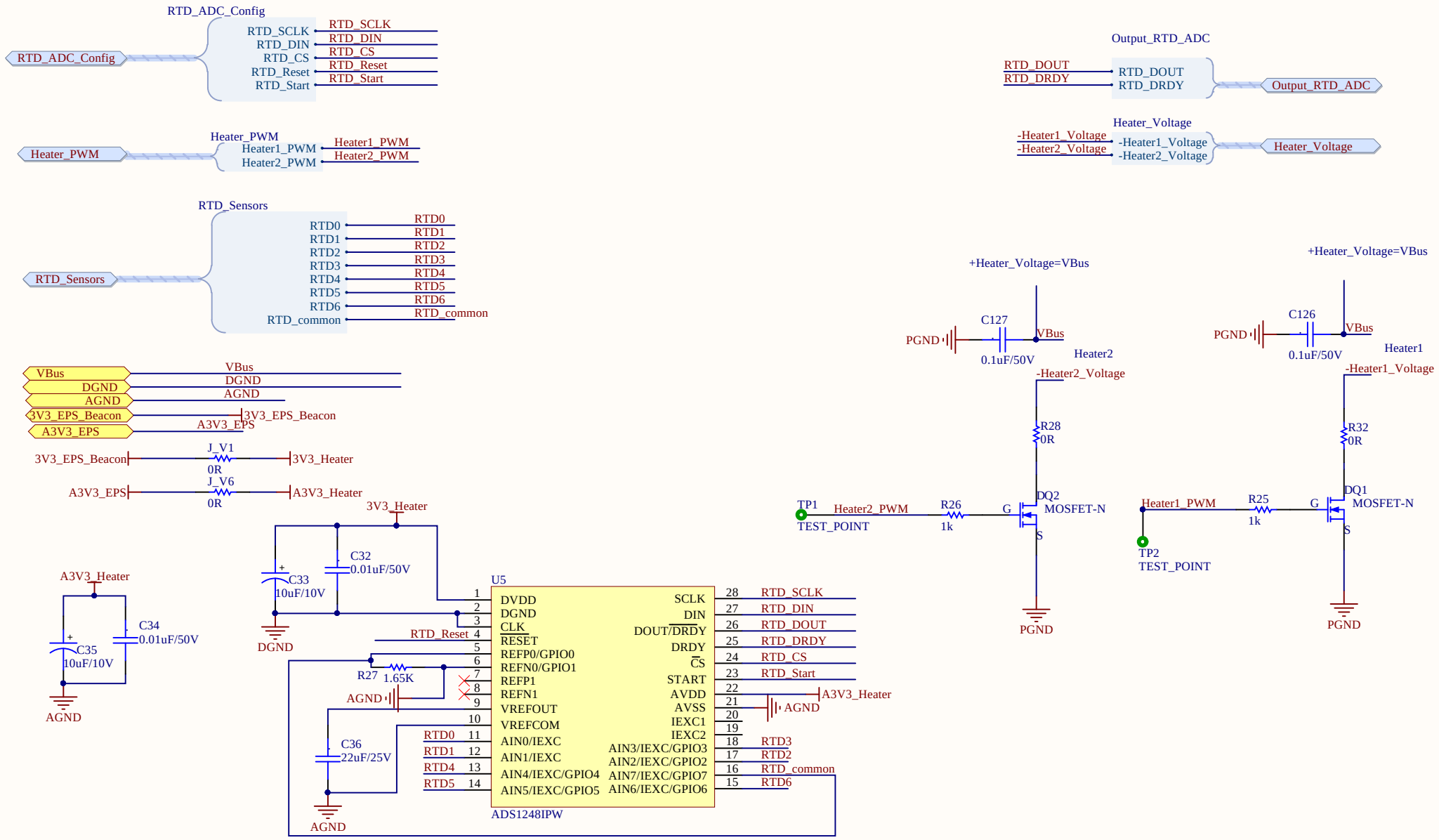

Title: **Batteries Heater Controller**			UFSC - SpaceLab University Campus - Trindade Dep. of Electrical Engineering - CTC Florianópolis, Santa Catarina, Brazil CEP: 88040-900
Size: A4	Project: FloripaSat	Revision: V2.0	
Date: 23/02/2017	Time: 18:23:34	Number: 6	Sheet 6 of 10
Drawn by: Sara Vega			File: 4_Battery_Heater_Controller.SchDoc

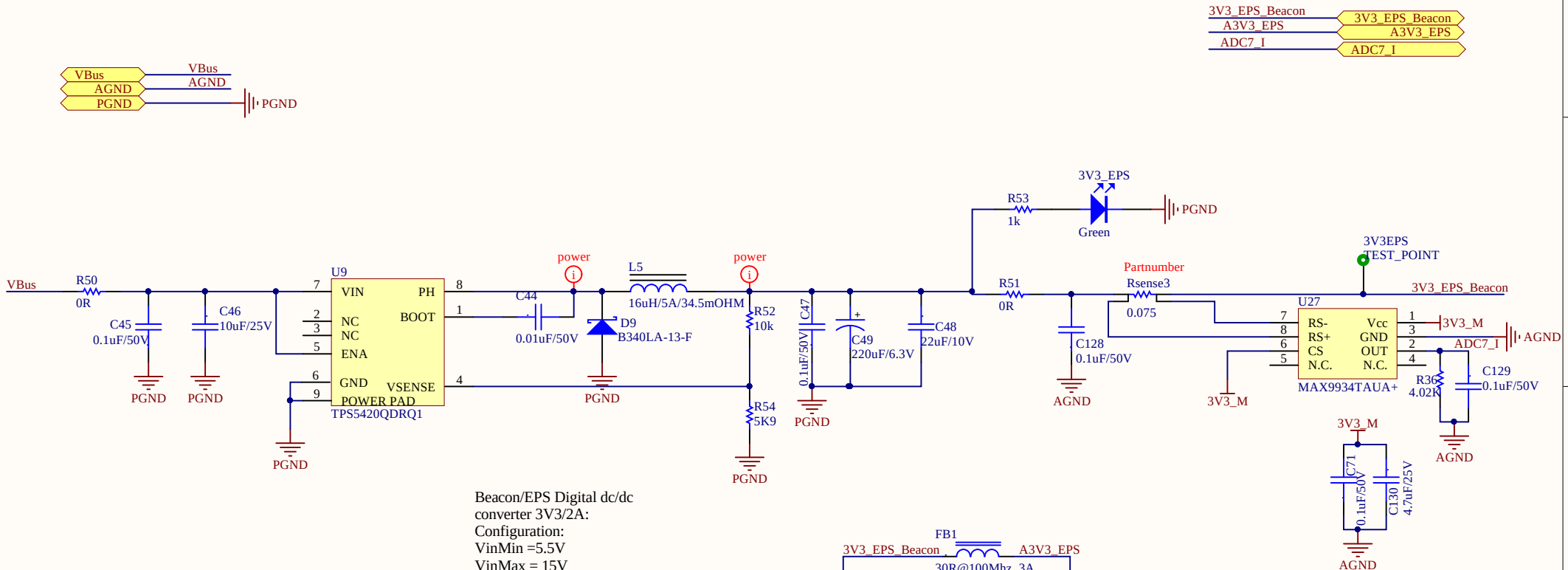

Beacon/EPS Digital dc/dc converter 3V3/2A:
Configuration:
VinMin =5.5V
VinMax = 15V
Vout = 3.3V
Iout = 2A
Footprint = 81.0 mm2
Total Pd = 1.21W

Current Sense Amplifier, chips selection:
I_EPS_Beacon=300[mA]
Vout_Max=Vref_MSP470=2.5[V]
Rout=Vout_Max/(Isense [A] * Rsense [Ohm] * 25 [uA/mV])
Rout=4065[Ohm] 4.02 k[Ohm]
Vout = Isense [A] * Rsense [Ohm] * 25 [uA/mV] * Rout [Ohm]
Vout = 300[mA] * 82m [Ohm] * 25 [uA/mV] * 4.02 k [Ohm]
Vout = 2.4723 [V]

Title: *EPS/BCM Step-Down Converter 3V3/2A*			UFSC - SpaceLab University Campus - Trindade Dep. of Electrical Engineering - CTC Florianópolis, Santa Catarina, Brazil CEP: 88040-900
Size: A4	Project: FloripaSat	Revision:*	
Date: 23/02/2017	Time: 18:23:35	Number: 7	Sheet 7 of 10
Drawn by: *			File: 5_dc_dc_3V3_EPS_Beacon.SchDoc

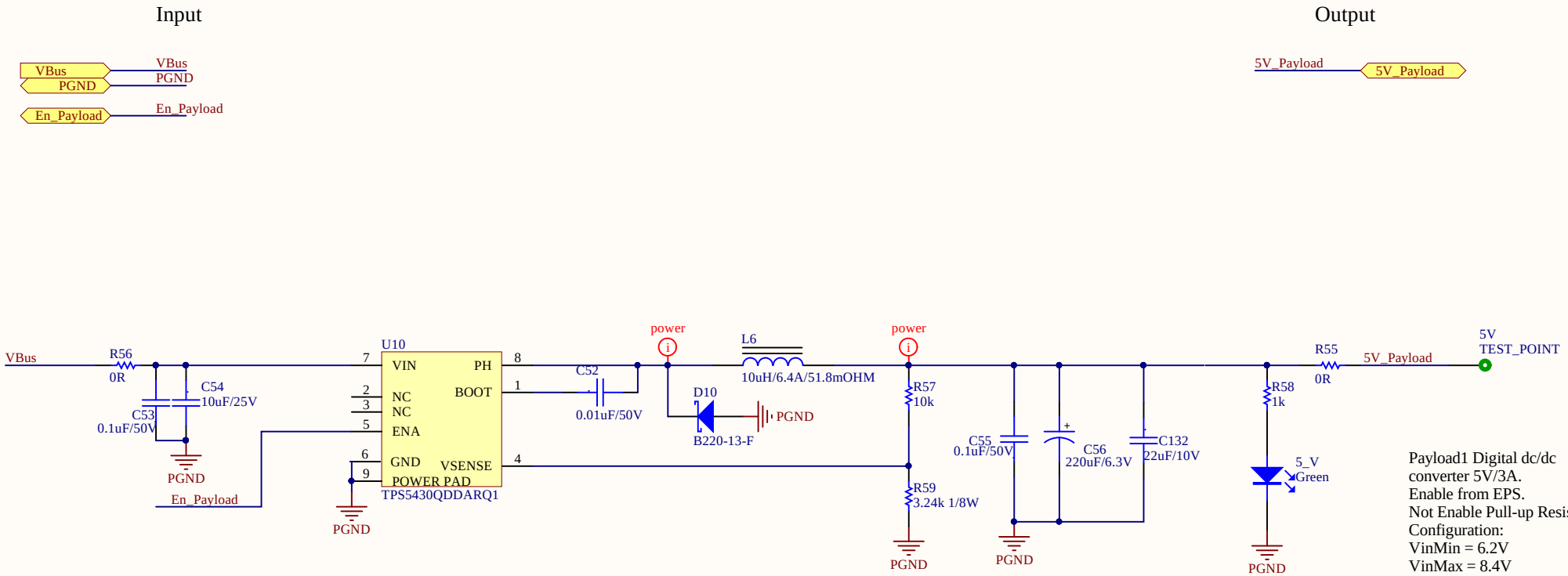

Title: ***Payloads Step-Down Converters 5V/3A***			*UFSC - SpaceLab*
Size: A4	Project: FloripaSat	Revision: V2.0	*University Campus - Trindade*
Date: 23/02/2017	Time: 18:23:35	Number: 8	Sheet 8 of 10
Drawn by: Sara Vega			File: 6_dc_dc_5V_Payloads.SchDoc

Dep. of Electrical Engineering - CTC
Florianópolis, Santa Catarina, Brazil
CEP: 88040-900

Input

VBus → VBus
PGND → PGND
En_3V3_OBDH_TT&C → En_3V3_OBDH_TT&C

Output

3V3_OBDH → 3V3_OBDH
3V3_Deployment_ANT → 3V3_Deployment_ANT
3V3_OBDH_3V3_Deployment_ANT → 3V3_OBDH_3V3_Deployment_ANT

OBDH/TT&C Step-Down Converter 3V3/1A

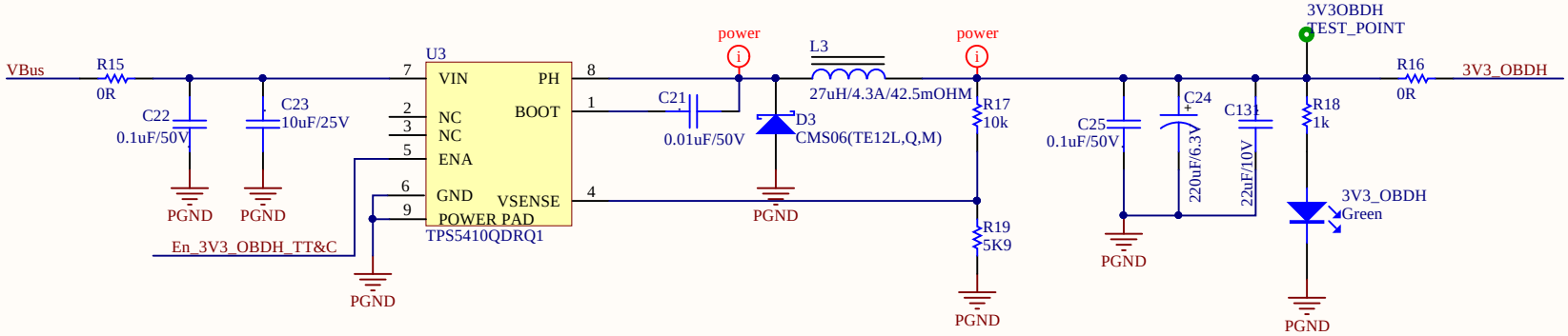

OBDH Digital dc/dc converter 3V3/1A.
Enable from EPS.
Configuration:
VinMin = 6.5V
VinMax = 15.0V
Vout = 3.3V
Iout = 1A
Pd = 0.58W

Deployment Antenna Step-Down Converter 3V3/2A

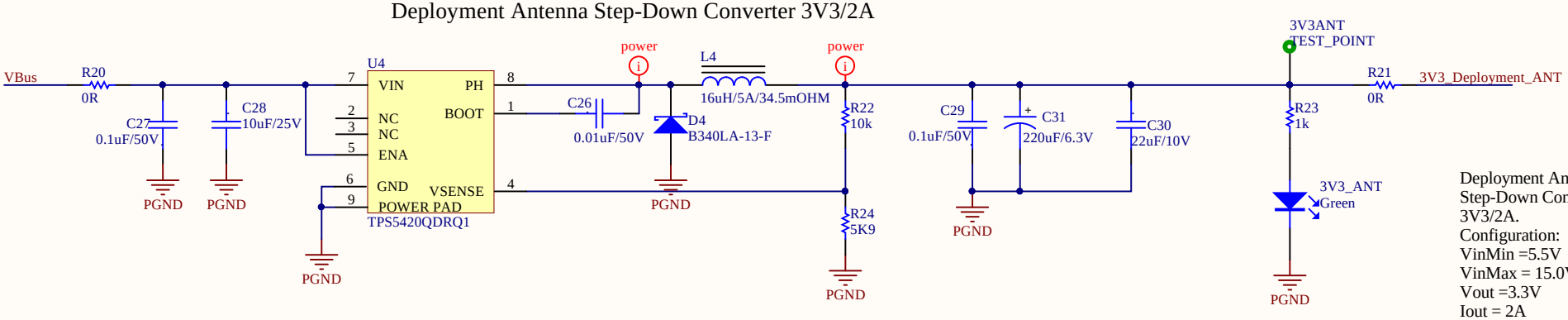

Deployment Antenna Step-Down Converter 3V3/2A.
Configuration:
VinMin =5.5V
VinMax = 15.0V
Vout =3.3V
Iout = 2A
Total Pd =1.08W

Title: **OBDH Step-Down 3V3/1A/2A**			UFSC - SpaceLab University Campus - Trindade Dep. of Electrical Engineering - CTC Florianópolis, Santa Catarina, Brazil CEP: 88040-900
Size: A4	Project: FloripaSat	Revision:*	
Date: 23/02/2017	Time: 18:23:35	Number: 9	Sheet 9 of 10
Drawn by: *			File: 7_dc_dc_3V3_3V3_Deployment_ANT.SchDoc

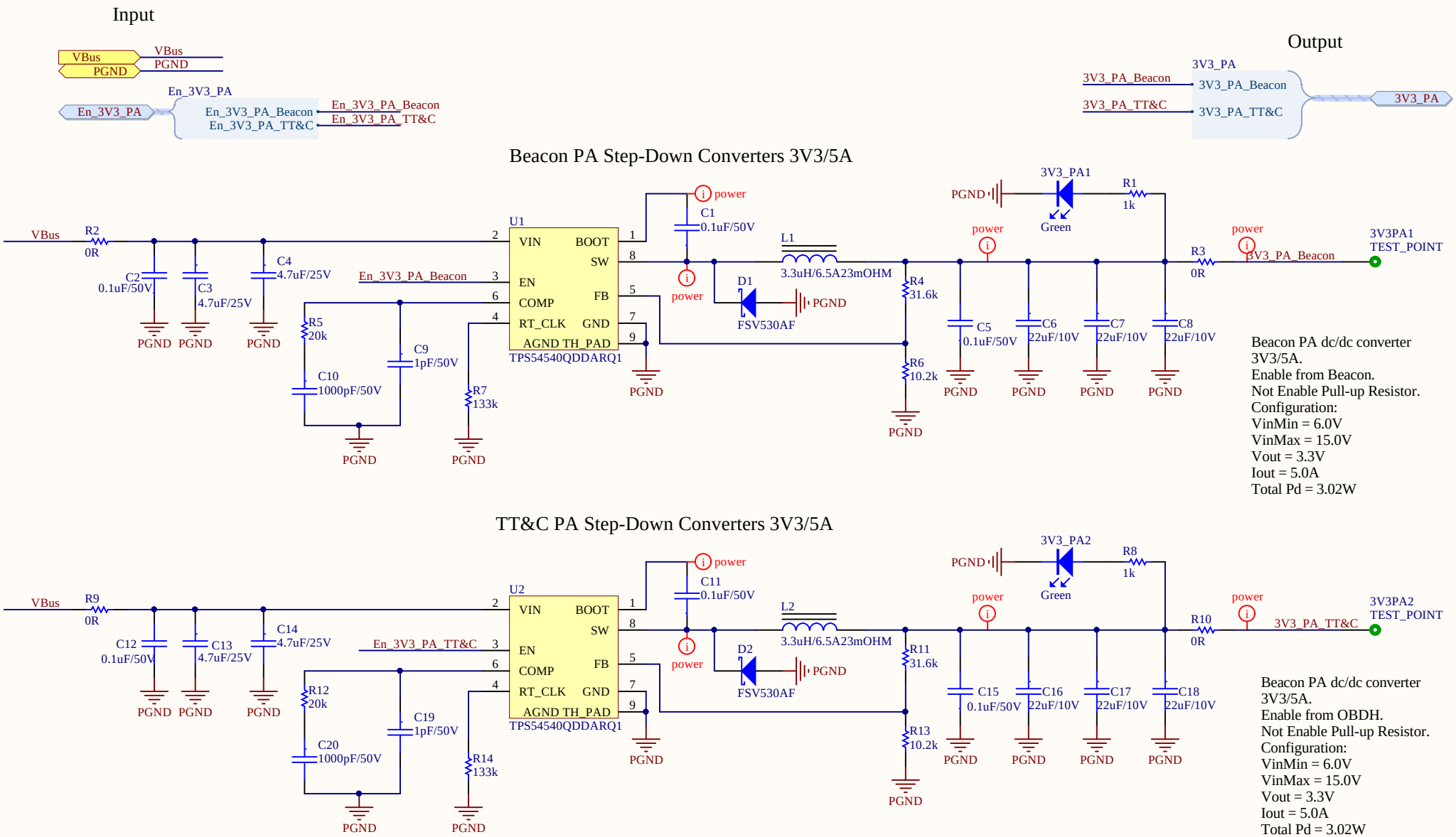

Title: ***PA Step-Down Converters 5V/3A***			*UFSC - SpaceLab*
Size: A4	Project: FloripaSat	Revision: V2.0	*University Campus - Trindade*
Date: 23/02/2017	Time: 18:23:35	Number: 10	Sheet 10 of 10
Drawn by: Sara Vega			File: 8_dc_dc_3V3_5A_PA.SchDoc

Dep. of Electrical Engineering - CTC
Florianópolis, Santa Catarina, Brazil
CEP: 88040-900

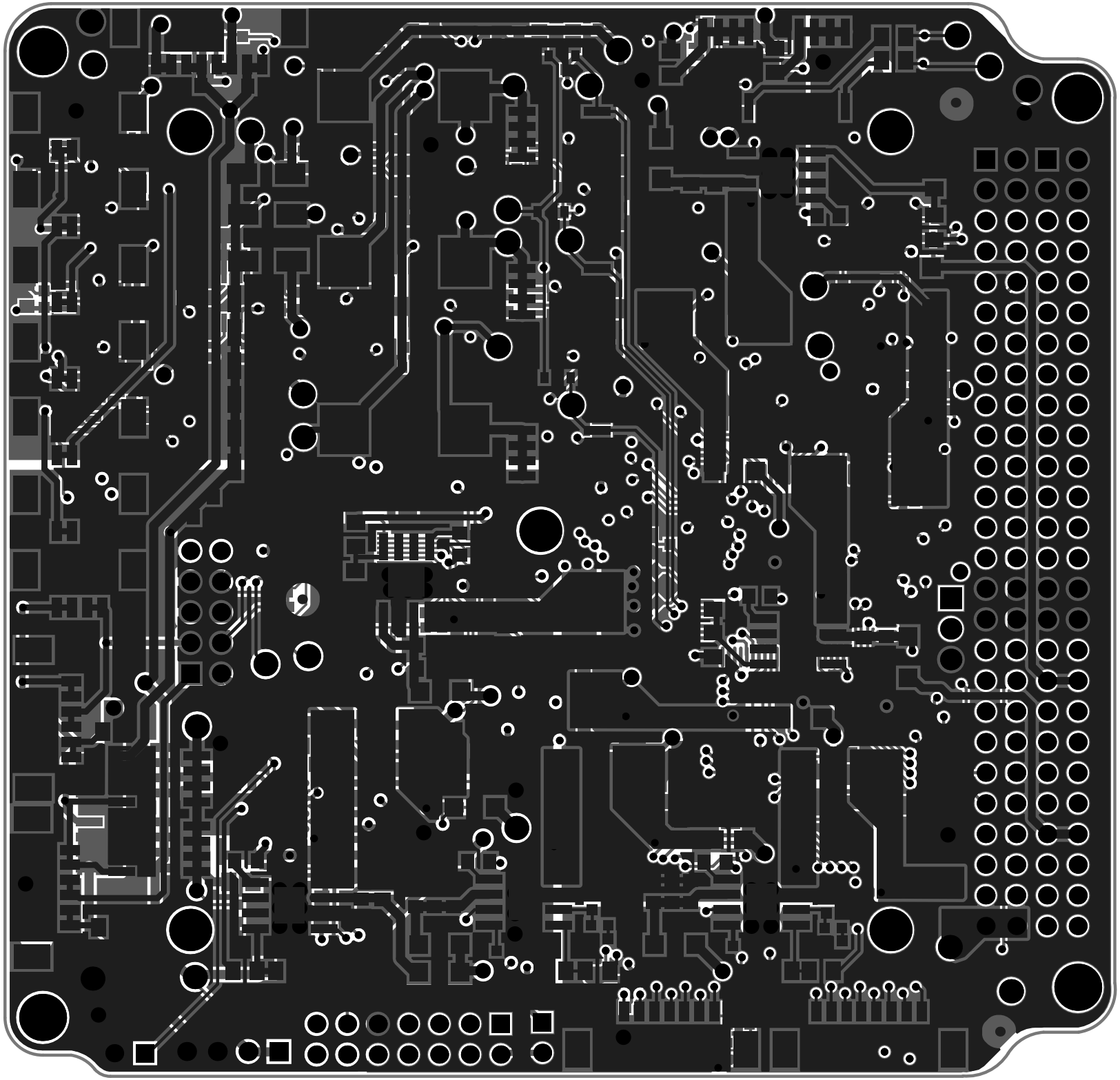

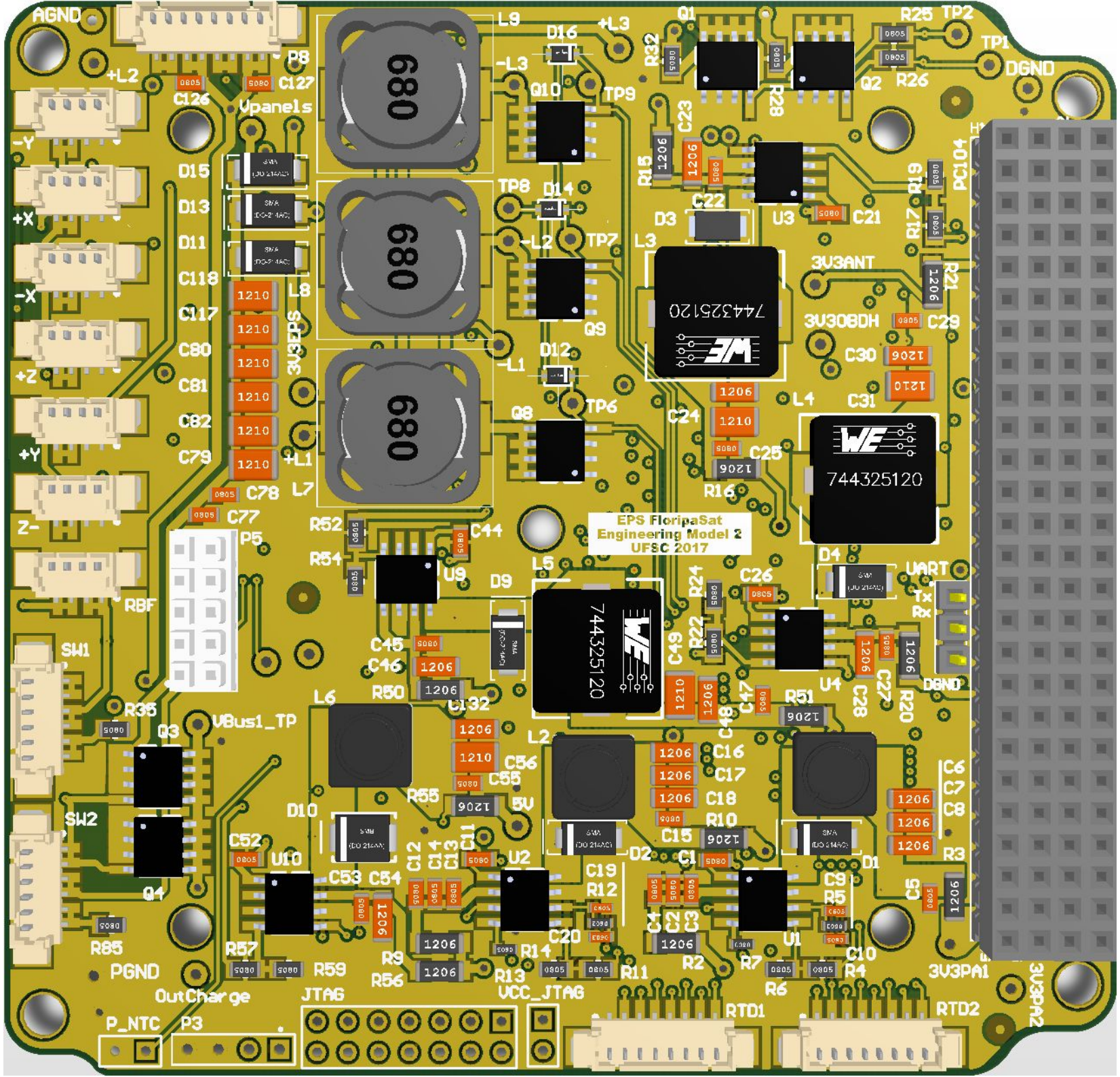
EPS FloripaSat
Engineering Model 2
UFSC 2017
AGND
DGND
Vpanels
3V3EPS
3V3ANT
3V3OBDH
3V3PA1
3V3PA2
VBus1_TP
5V
PGND
OutCharge
P_NTC
JTAG
VCC_JTAG
RTD1
RTD2
UART
Tx
Rx
744325120

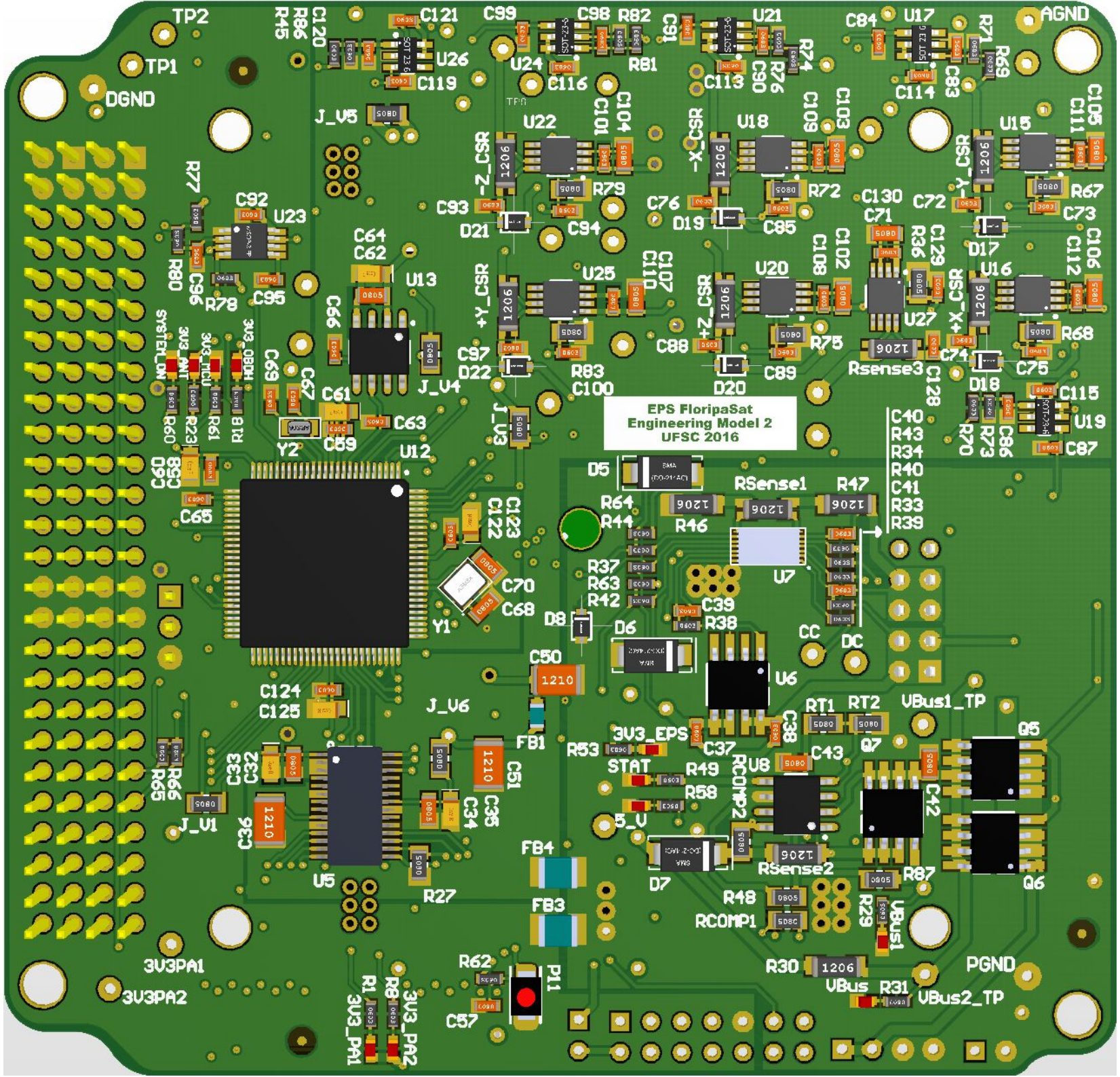
EPS FloripaSat
Engineering Model 2
UFSC 2016
TP2
TP1
DGND
AGND
PGND
3V3PA1
3V3PA2
3V3_PA1
3V3_PA2
SYSTEM_ON
3V3_ANT
3V3_MCU
3V3_HDGD
3V3_EPS
STAT
VBus1_TP
VBus2_TP
VBus1
VBus
RSense1
RSense2
RSense3
RCOMP1
RCOMP2
-Z_CSR
-X_CSR
-Y_CSR
+Y_CSR
+Z_CSR
+X_CSR
U5
U6
U7
U12
U13
U15
U16
U17
U18
U19
U20
U21
U22
U23
U24
U25
U26
U27
Q5
Q6
Q7
Y1
Y2
P11

Bill of Materials

Bill of Materials For Project [PCB_Project_EngineeringModel2.PrjPcb] (No PCB Document Selected)

Source Data From: PCB_Project_EngineeringModel2.PrjPcb
Project: PCB_Project_EngineeringModel2.PrjPcb
Variant: None

Creation Date: 23/02/2017 18:24:14
Print Date: 23-Feb-17 6:24:22 PM

#Column Nam	Footprint	Comment	PartNumber	Designator	Description	Quantity
	HDR4 PicoBlade	Header 4_PicoBlade	53398-0471	+X, +Y, +Z, -X, -Y, -Z, RBF	Header, 4-Pin	7
	1206 - ohmite	0.05R/0.5W	LVK12R050DER	+X_CSR, +Y_CSR, +Z_CSR, -X_CSR, -Y_CSR, -Z_CSR	Current Sense Resistors - SMD 0.05ohm 5% 4 Terminal	6
	0603-LED	Green	150060VS75000	3V3_ANT, 3V3_EPS, 3V3_MCU, 3V3_OBDH, 3V2_PA1, 3V3_PA2, 5 V_STAT, VBus, VBus1	SMD Green LED	10
	CC0805	0.1uF/50V	GRM216R71H103KA01D	C1, C2, C5, C11, C12, C15, C22, C25, C27, C29, C43, C45, C47, C53, C55, C62, C77, C78, C126, C127	CAP CER 0.1UF 50V 10% X7R 0805	20
	CC0805	4.7uF/25V	GRM21BR71E475KA73L	C3, C4, C13, C14, C102, C103, C104, C105, C106, C107, C130	CAP CER 4.7uF 25V 10% X7R 0805	11
	CC1206	22uF/10V	GRM31CR71A226KE15L	C6, C7, C8, C16, C17, C18, C30, C48, C131, C132	CAP CER 22uF 10V 10% X7R 1206	10
	CC0603	1pF/50V	0603SA1R0CAT2A	C9, C19	CAP CER 1PF 50V 5% NPO 0603	2
	CC0603	1000pF/50V	GRM188R71H102KA01D	C10, C20, C37, C38	CAP CER 1000pF 50V 10% X7R 0603	4
	CC0805	0.01uF/50V	GRM216R71H103KA01D	C21, C26, C32, C34, C44, C52	CAP CER 0.01uF 50V 10% X7R 0805	6
	CC1206	10uF/25V	GRM31CR71E106KA12L	C23, C28, C46, C54	CAP CER 10uF 25V 10% X7R 1206	4
	cc1210	220uF/6.3V	6TPE220MAZB	C24, C31, C49, C56	CAP Tantalum 220uF 6.3V 20% 1210	4
	CC0805_Tantalum	10uF/10V	TPSR106K006R1000	C33, C35, C60, C61, C64, C123, C125	CAP Tantalum 10uF 6.3V 10% 0805	7
	CC1210	22uF/25V	GRM32ER71E226KE15L	C36, C50, C51, C79, C80, C81, C82, C117, C118	CAP CER 22uF 25V 10% X7R 1210	9
	CC0603	0.47uF/50V	C1608X7R1H474K080AE	C39, C65	CAP CER 0.47UF 50V 10% X7R 0603	2
	CC0603	0.1uF/50V	GRM188R71H104KA93D	C40, C41, C58, C59, C63, C71, C72, C73, C74, C75, C76, C83, C85, C86, C88, C89, C90, C92, C93, C94, C97, C98, C100, C101, C108, C109, C110, C111, C112, C113, C114, C115, C116, C119, C120, C121, C122, C124, C128, C129	CAP CER 0.1UF 50V 10% X7R 0603	40
	CC0805	1uF/50V	GRM21BR71H105KA12L	C42	CAP CER 1.0UF 50V 10% X7R 0805	1
	CC0603	0.047uF/25V	GCM188R71E473KA37D	C57	CAP CER 0.047UF 25V 0603	1
	CC0603	0.01uF/25V	06033C103JAT4A	C66, C95	CAP CER 0.01UF 25V 5% X7R 0603	2
	CC0603	12pF/50V	GQM1885C1H120GB01D	C67, C69	CAP CER 12pF 50V 0603	2
	CC0805	10pF/100V	08051A100FAT2A	C68, C70	CAP CER 10pF 100V 0805	2
	CC0603	DNP	GRM188R71H104KA93D	C84, C87, C91, C99	CAP CER 0.1UF 50V 10% X7R 0603	4
	CC0603	100pF/50V	GQM1885C1H101GB01D	C96	CAP CER 100pF 50V 0603	1
	DO-214AC	FSV530AF	FSV530AF	D1, D2	DIODE SCHOTTKY 30V 5A DO-214AA	2
	cms06	CMS06(TE12L,Q,M)	CMS06(TE12L,Q,M)	D3	DIODE SCHOTTKY 30V 2A CMS06(TE12L,Q,M)	1
	DO-214AC	B340LA-13-F	B340LA-13-F	D4, D7, D9, D11, D13, D15	DIODE SCHOTTKY 40V 3A B340LA-13-F	6
	DO-214AC	3SMAJ5919B-TP	3SMAJ5919B-TP	D5, D6	DIODE ZENER 5.6V 3W DO214AC	2
	SOD323F	NSVR0320MW2T1G	NSVR0320MW2T1G	D8, D12, D14, D16	DIODE SCHOTTKY 23V 1A SOD323F	4
	DO-214AA	B220-13-F	B220-13-F	D10	DIODE SCHOTTKY 20V 2A B220-13-F	1
	SOD323F	DNP	NSVR0320MW2T1G	D17, D18, D19, D20, D21, D22	DIODE SCHOTTKY 23V 1A SOD323F	6
	IND0805	30R@100Mhz, 3A	BLM21PG300SN1D	FB1	Ferrite Bead 30 OHM 3A 100MHz	1
	IND1210	30R@100Mhz, 10A	BLE32PN300SN1L	FB3, FB4	Ferrite Bead 30 OHM 10A 100MHz	2
	HDR2X7	Header 7X2	90131-0127	JTAG	Header, 7-Pin, Dual row	1
	0805	0R	CRCW080500000Z0EA	J_V1, J_V3, J_V5, J_V6, R28, R32, RCOMP2	RES 0R OHM 1/16W JUMPER 0805	7
	0805	0NP	CRCW080500000Z0EA	J_V4, RCOMP1	RES 0R OHM 1/16W JUMPER 0805	2
	Ind_SRP6540	3.3uH/6.5A23mOHM	SRP6540-3R3M	L1, L2	INDUCTOR 3.3UH 6.5A SMD	2
	IND_744325xxx	27uH/4.3A/42.5mOHM	7447798271	L3	INDUCTOR 27UH 4.3A SMD	1
	IND_744325xxx	16uH/5A/34.5mOHM	7443251600	L4, L5	INDUCTOR 16UH 5A SMD	2
	Ind_IHLP	10uH/6.4A/51.8mOHM	IHLP3232DZER100M11	L6	INDUCTOR 2.2UH 6.4A SMD	1
	IND_HC9	22uH/6.3/25.7mOHM	HC9-220-R	L7, L8, L9	DR127 Series - 22uH / 6.3A / 25.7mOHM	3
	HDR 1X4	Header 4		P3	Header, 4-Pin	1
	IPS1-105-01-S-D	Header 5X2IPS1-105-01-S-D	IPS1-105-01-S-D	P5	10 Position Receptacle Connector 0.100" (2.54mm)	1
	HDR8 PicoBlade	Header 8_PicoBlade	53261-0871	P8, RTD1, RTD2	Header, 8-Pin	3
	B3U-1000P	Tactile Switch	B3U-1000P	P11	Tactile Switches Tactile Switch SPST-NO Top Actuated Surface Mount	1
	PC104	PC104	ESQ-126-39-G-D	PC104	PC104	1
	HDR1X2	Header 2		P_NTC, VCC_JTAG	Header, 2-Pin	2
	SOIC8_Mosfet	MOSFET-N	SI4010DY-T1-GE3	Q1, Q2, Q8, Q9, Q10	MOSFET N-Channel 30V	5
	SOIC8_Mosfet	MOSFET-P-SI4403CDY-T1-GE3	SI4403CDY-T1-GE3	Q3, Q4, Q5, Q6, Q7	MOSFET 1.8V P-Channel 20 V, 0.0155 Ω typ., 13.4 A	5
	0603	1k	MCT06030C1001FP500	R1, R8, R18, R23, R29, R31, R34, R37, R39, R40, R43, R49, R53, R58, R60, R61	RES 1.0K OHM 1/8W 1% 0603	16
	1206	0R	CRCW120600000Z0EAHP	R2, R3, R9, R10, R15, R16, R20, R21, R46, R47, R50, R51, R55, R56	RES 0.0 OHM 1/2W JUMP 1206	14
	0805	31.6k	CRCW080531K6FKEA	R4, R11	RES 31.6k OHM 1/8W 1% 0805	2
	0603	20k	71-CRCW0603-20K-E3	R5, R12	RES 20K OHM 1/10W 0.1% 0603	2
	0805	10.2k	RT0805FRE0710K2L	R6, R13	RES 10.2k OHM 1/8W 1% 0805	2
	0603	133k	ERA-3AEB1333V	R7, R14	RES 133K OHM 1/10W 0.1% 0603	2
	0805	10k	CRCW080510K0FKEA	R17, R22, R52, R57	RES 10K OHM 1/8W 1% 0805	4
	0805	5K9	71-CRCW0805-5.9K-E3	R19, R24, R54	RES 5K9 OHM 1/8W 1% 0805	3
	0805	1k	ERJ-6ENF1001V	R25, R26, R48	RES 1.0K OHM 1/8W 1% 0805	3
	0805	1.65K	PCF0805R-1K65BT1	R27	RES 1.65K OHM 1/10W 0.1% 0805	1
	1206	DNP	CRCW120600000Z0EAHP	R30	RES 0.0 OHM 1/2W JUMP 1206	1
	0603	150R	CRCW0603150RFKEA	R33, R42, R44	RES 150R OHM 1/8W 1% 0603	3
	0805	100K 1/10W	APC0805B100RN	R35	RES 100R OHM 1/10W 0.1% 0805	1
	0805	4.02K	CPF0805B3K3E1	R36	RES 3k3 OHM 1/10W 0.1% 0805	1
	0603	470R	MCT06030C4700FP500	R38	RES 470R OHM 1/8W 1% 0603	1
	0603	300K	RG1608P-304-B-T5	R45, R70	RES 300K OHM 1/10W 0.1% 0603	2
	0805	3.24k 1/8W	CRCW08053K24FKEA	R59	RES 3.24k OHM 1/8W 1% 0805 SMD	1
	0603	47k	MCT0603MD4702DP500	R62, R77, R78	RES 47K OHM 1/8W 0.5% 0603	3
	0603	4K7	MCT06030C4701FP500	R63, R64	RES 4K7 OHM 1/8W 1% 0603	2
	0603	10k	MCT06030MC1002FP500	R65, R66	RES 10K OHM 1/8W 1% 0603	2
	0805	3k3	CPF0805B3K3E1	R67, R68, R72, R75, R79, R83	RES 3k3 OHM 1/10W 0.1% 0805	6
	0603	93K1	CRCW060393K1FKEA	R69, R74, R81	RES 93.1K OHM 1/10W 1% 0603	3
	0603	100K	CRCW060310 0KFKEA	R71, R73, R76, R82, R86	RES 100K OHM 1/10W 1% 0603	5
	0603	120K	ERJ-3EKF1203V	R80	RES 120K OHM 1/10W 1% 0603	1
	0805	100k	ERJ-6ENF1001V	R85	RES 1.0K OHM 1/8W 1% 0805	1
	0805	100R 1/10W	APC0805B100RN	R87	RES 100R OHM 1/10W 0.1% 0805	1
	1206 - ohmite	0.01R/0.5W	LVK12R010DER	RSense1	Current Sense Resistors - SMD 0.01ohm 5% 4 Terminal	1
	1206 - ohmite	0.075	LVK12R050DER	Rsense3	Current Sense Resistors - SMD 0.05ohm 5% 4 Terminal	1
	1206	178m	ERJ-8BWFR082V	RSense2	Current Sense Resistors - SMD 1Watt 0.082Ohms 1% 1206	1
	0805	8.87k	ERJ-6ENF8871V	RT1	RES 8.87k OHM 1/8W 1% 0805	1
	0805	13.7k	RMCF0805FT13K7	RT2	RES 13.7k OHM 1/8W 1% 0805	1
	HDR6 PicoBlade	Header 6H_PicoBlade	53398-0671	SW1, SW2	Header, 6-Pin, Right Angle	2
	0603-LED	RED	LTST-C191KFKT	SYSTEM_ON	SMD Red LED	1
	SO8 Power PAD	TPS54540QDDARQ1	TPS54540QDDARQ1	U1, U2	TPS4540QDDARQ1	2
	SO8 Power PAD	TPS5410QDRQ1	TPS5410QDRQ1	U3	TPS5410QDRQ1	1
	SO8 Power PAD	TPS5420QDRQ1	TPS5420QDRQ1	U4, U9	TPS5420QDRQ1	2
	TSSOP28	ADS1248IPW	ADS1248IPWR	U5	24 bit ADC Differential Input, SPI, 28-pin TSSOP	1
	SOIC8	FDS6898AZ	FDS6898AZ	U6	MOSFET 2N-CH 20V 9.4A 8SOIC	1
	TDFN-14-EP_3x5	DS2775G+	DS2775G+	U7	IC FUEL GAUGE LI+ 2CELL 14-TDFN	1
	SOIC-8	BQ2057WSN	BQ2057WSN	U8	Battery Management Li-Ion LDO Linear Charge Management IC	1
	SO8 Power PAD	TPS5430QDDARQ1	TPS5430QDDARQ1	U10	TPS5430QDDARQ1	1
	PZ0100A_N	MSP430F6659IPZR	MSP430F6659IPZR	U12	Imported	1
	SOIC-8	REF5025AQDRQ1	REF5025AQDRQ1	U13	REF5025A-Q1	1
	MSOP-8	MAX9934TAUA+	MAX9934TAUA+	U15, U16, U18, U20, U22, U25, U27	MAX9934TAUA+	7
	SOT-23 6L	TLV341AIDBVR	TLV341AIDBVR	U17, U19, U21, U24, U26	TLV341AIDBVR	5
	Vssop8	LMC555CMM/NOPB	LMC555CMM/NOPB	U23		1
	HDR 1X3	Header 3H	4-103327-5	UART	Header, 3-Pin, Right Angle	1
	XTAL_ABMBX	32MHz 10ppm	ABMBX-102-32.000MHZ-T	Y1	32MHz ±10ppm Crystal 10pF 60 Ohm -40°C ~ 125°C	1
	ABS06 0805	32.768kHz 12.5pF	ECS- 327-12.5-34S-TR	Y2	32.768kHz ±20ppm Crystal 12.5pF 70 kOhm -40°C ~ 125°C	1
						337

Approved

Notes