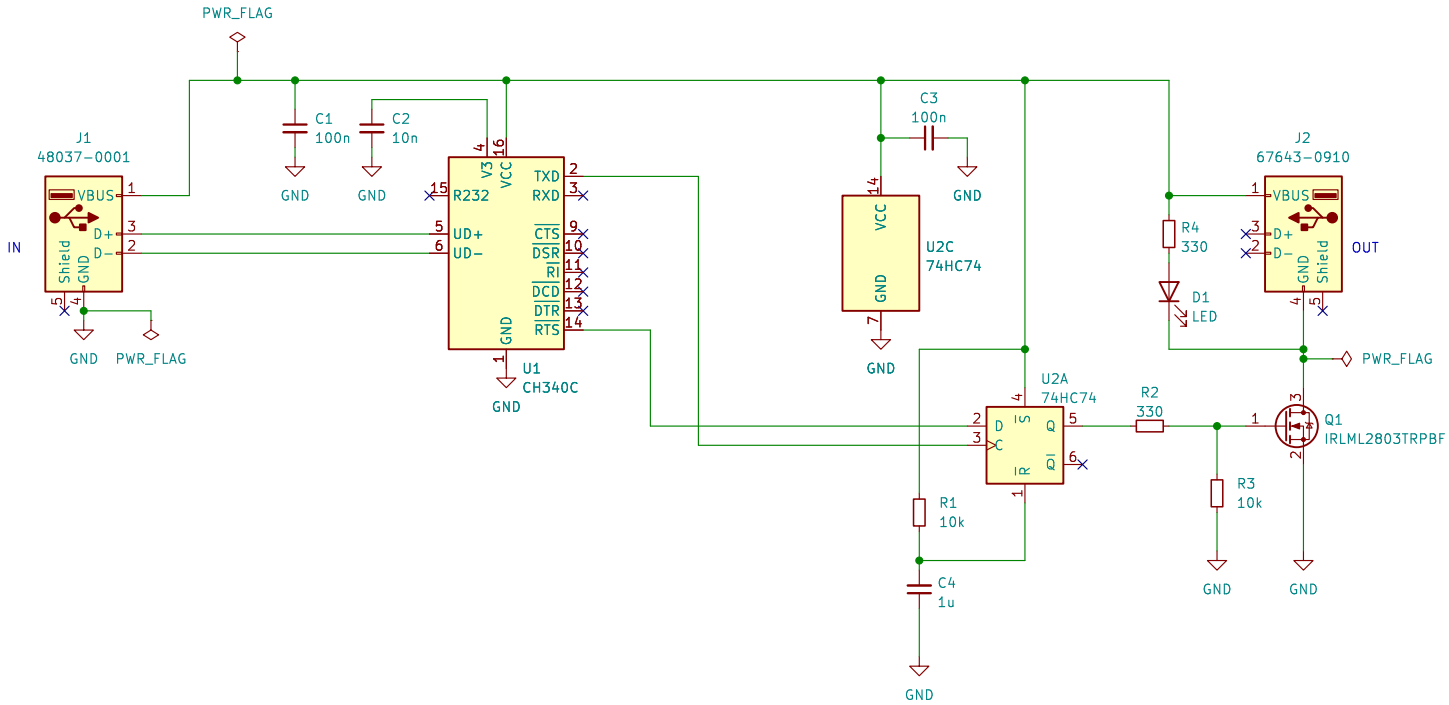

Notes:

RTS idles high at all times. RTS can only be set low when the port is opened. Closing the port sets RTS to high again.

By connecting the RTS line to the flip flop's (FF) data input (D) and the TX line to the FF's clock input (C), the RTS state is latched to the FF's output (Q) when a character is sent.

R2 limits capacitive charging spike from the gate. Increased from 100 to 330 ohm (to be the same as R4, reducing the amount of different parts).

R1 + C4 perform a Power on Reset (PoR) of the flip flop.

Unused FF's inputs are grounded.

Pin 1 and 2 of the LED are actaully swapped with regards to the datasheet, due to KLC. However, the silk screened triangle is correct.

Released under the CERN Open Hardware Licence Version 2 – Strongly Reciprocal:
https://ohwr.org/project/cernohl/wikis/Documents/CERN-OHL-version-2

Designed by Floris van der Ent (github.com/florisvde)

Sheet: /
File: usb-power-stick.kicad_sch

Title: USB Power Stick

Size: A4	Date: 2023-05-15	**Rev: 1.1**
KiCad E.D.A. kicad 7.0.2		Id: 1/1