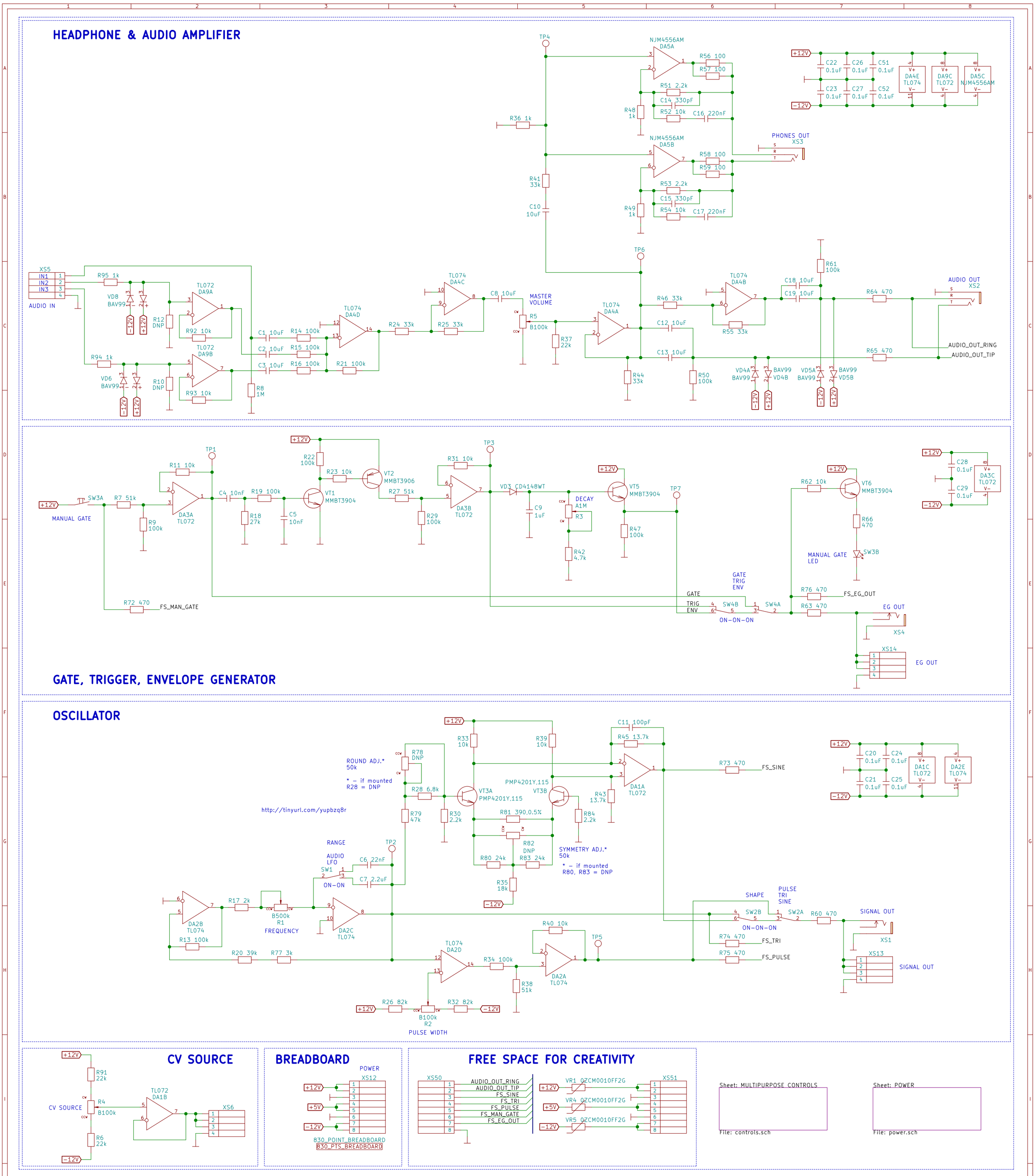
HEADPHONE & AUDIO AMPLIFIER
GATE, TRIGGER, ENVELOPE GENERATOR
OSCILLATOR
CV SOURCE
BREADBOARD
FREE SPACE FOR CREATIVITY
AUDIO IN
AUDIO OUT
PHONES OUT
MASTER VOLUME
MANUAL GATE
DECAY
RANGE
ROUND ADJ.*
SYMMETRY ADJ.*
FREQUENCY
PULSE WIDTH
SHAPE
SIGNAL OUT
EG OUT
MANUAL GATE LED
http://tinyurl.com/yupbzq8r
Sheet: MULTIPURPOSE CONTROLS
File: controls.sch
Sheet: POWER
File: power.sch
EDULAB3
mki x es .edu
Sheet: /
File: EDULAB3.sch
Title: Prototyping board
Size: A2
Date: 2024-03-05
Rev: v3.0
KiCad E.D.A. eeschema 5.1.5
Id: 1/3

POWER

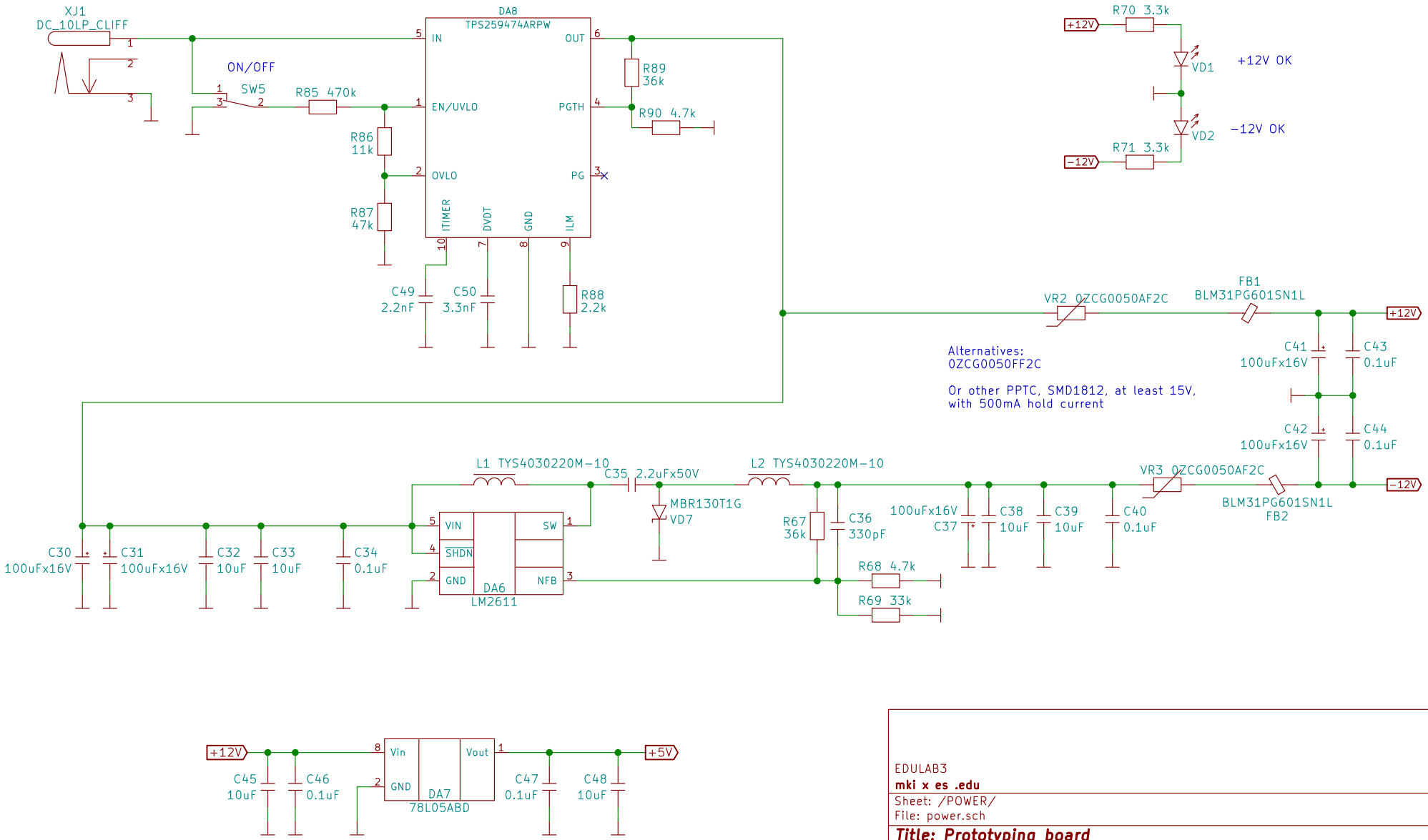

EDULAB3
mki x es .edu
Sheet: /POWER/
File: power.sch

Title: Prototyping board

Size: A4	Date: 2024−03−05	**Rev: v3.0**
KiCad E.D.A. eeschema 5.1.5		Id: 2/3

MULTIPURPOSE CONTROLS

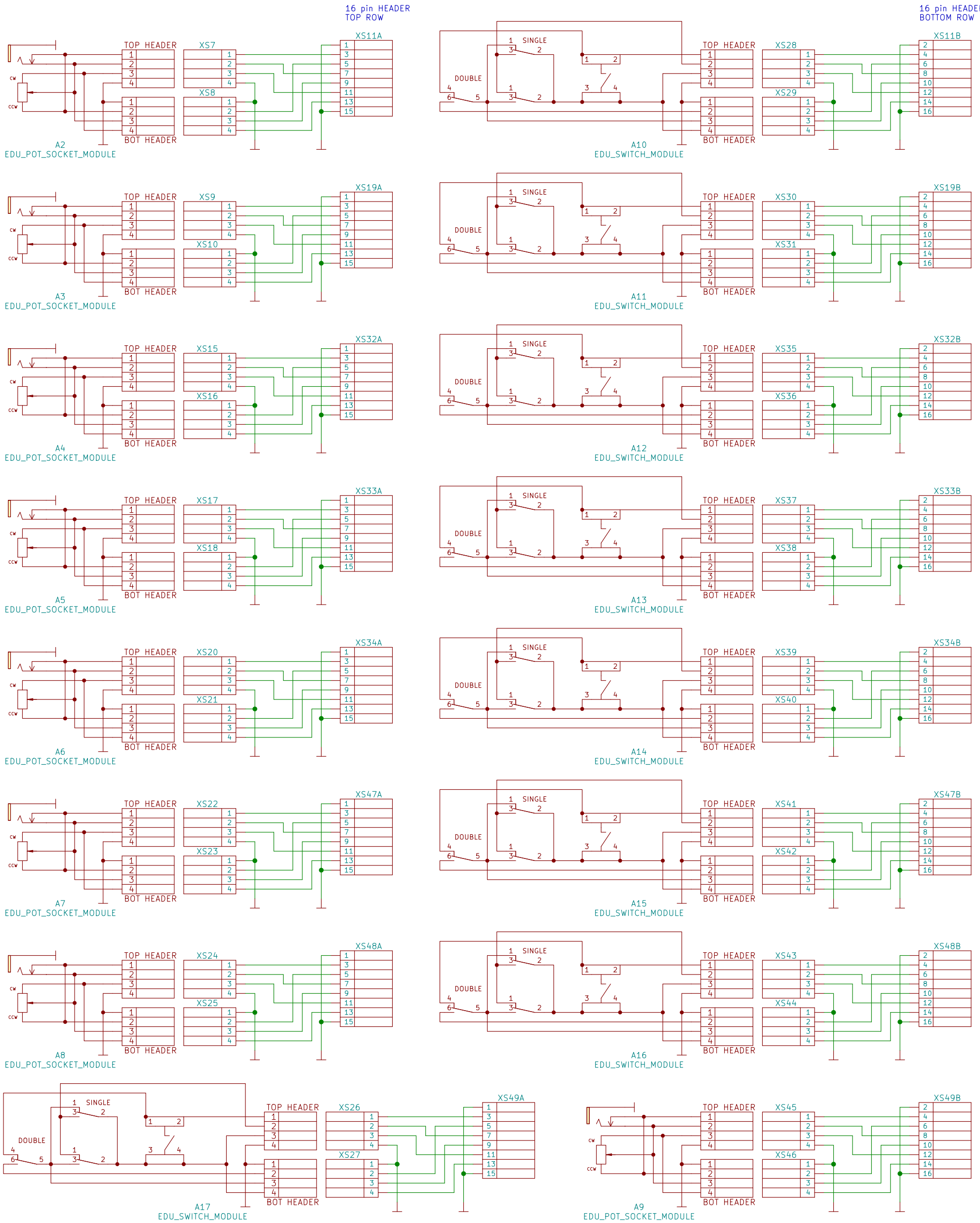

EDULAB3
mki x es .edu
Sheet: /MULTIPURPOSE CONTROLS/
File: controls.sch

Title: Prototyping board

Size: A3	Date: 2024-03-05	**Rev: v3.0**
KiCad E.D.A. eeschema 5.1.5		Id: 3/3