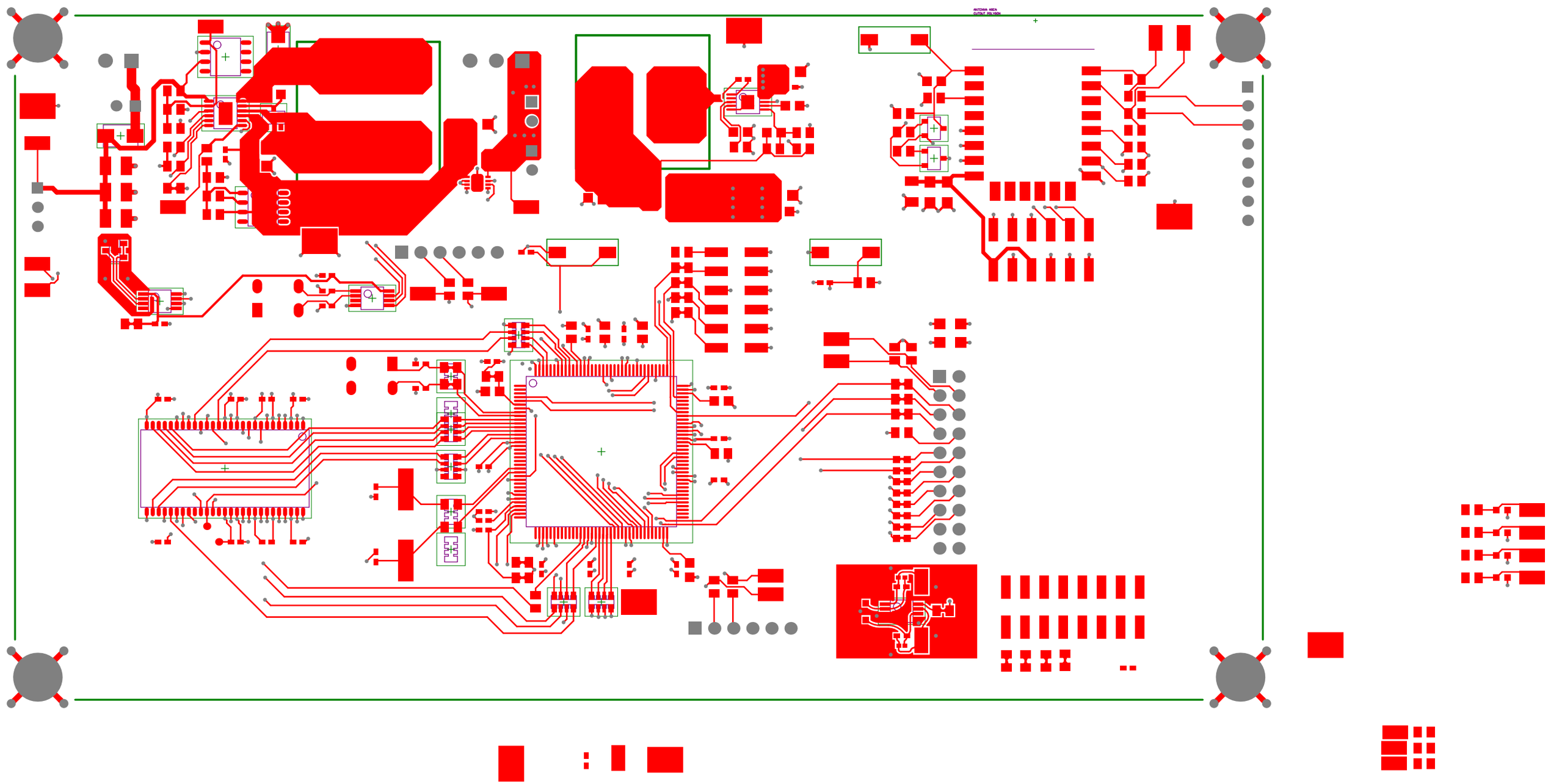
ANTENNA AREA
OUTLAY PROHIBIT

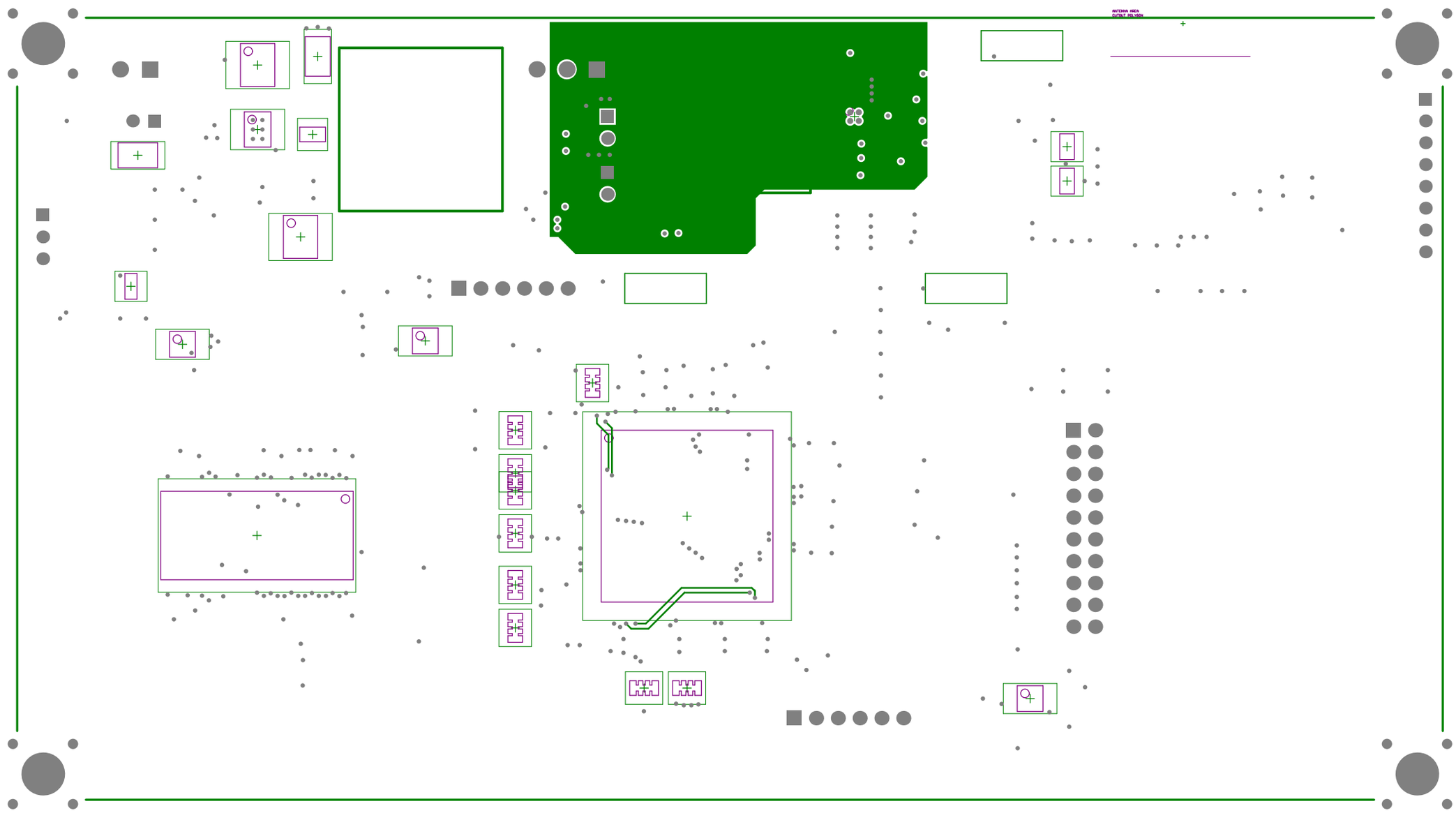
ANTENNA AREA
OUTLAY FOR MORE

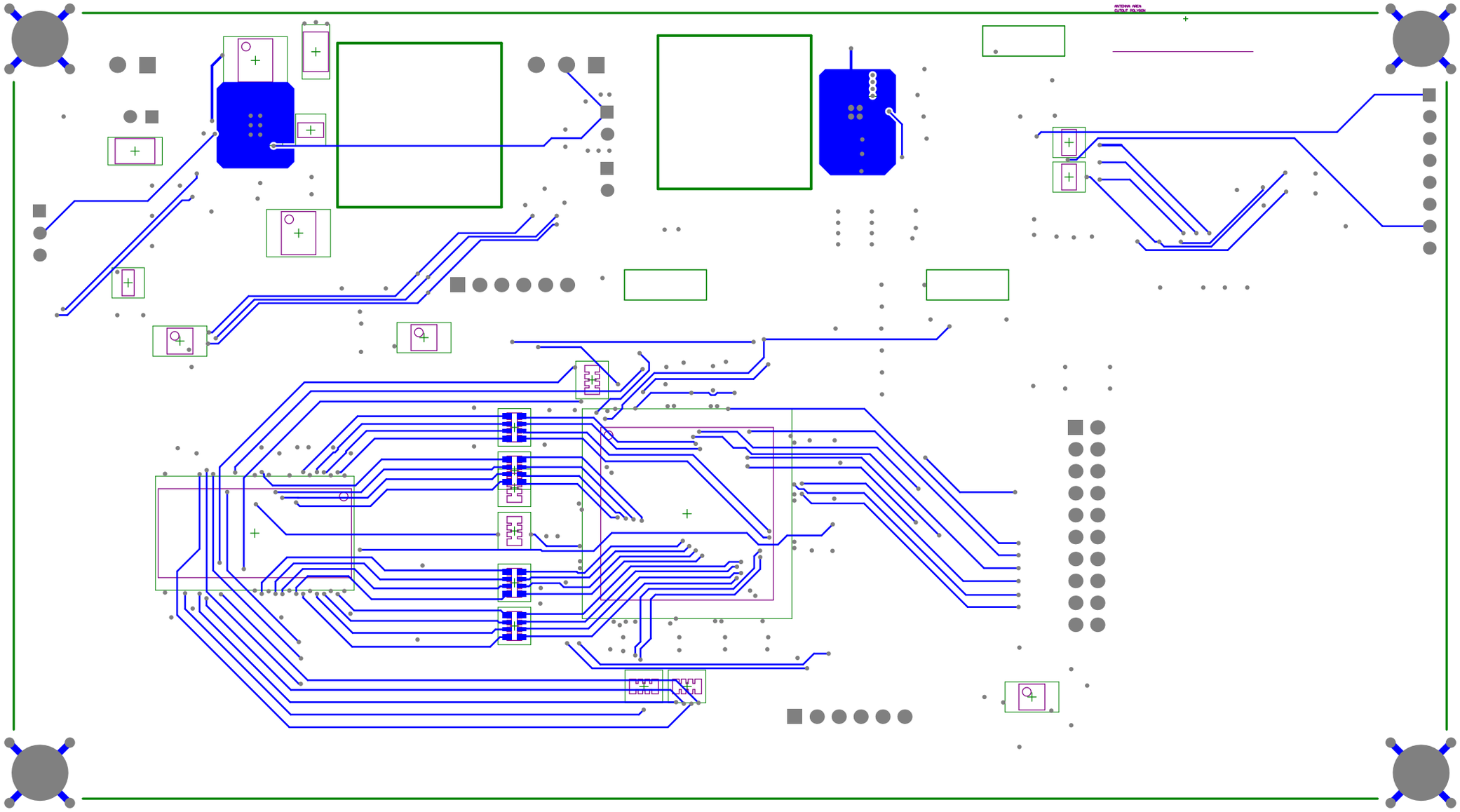
ANTENNA AREA
OUTLAY PROHIBIT

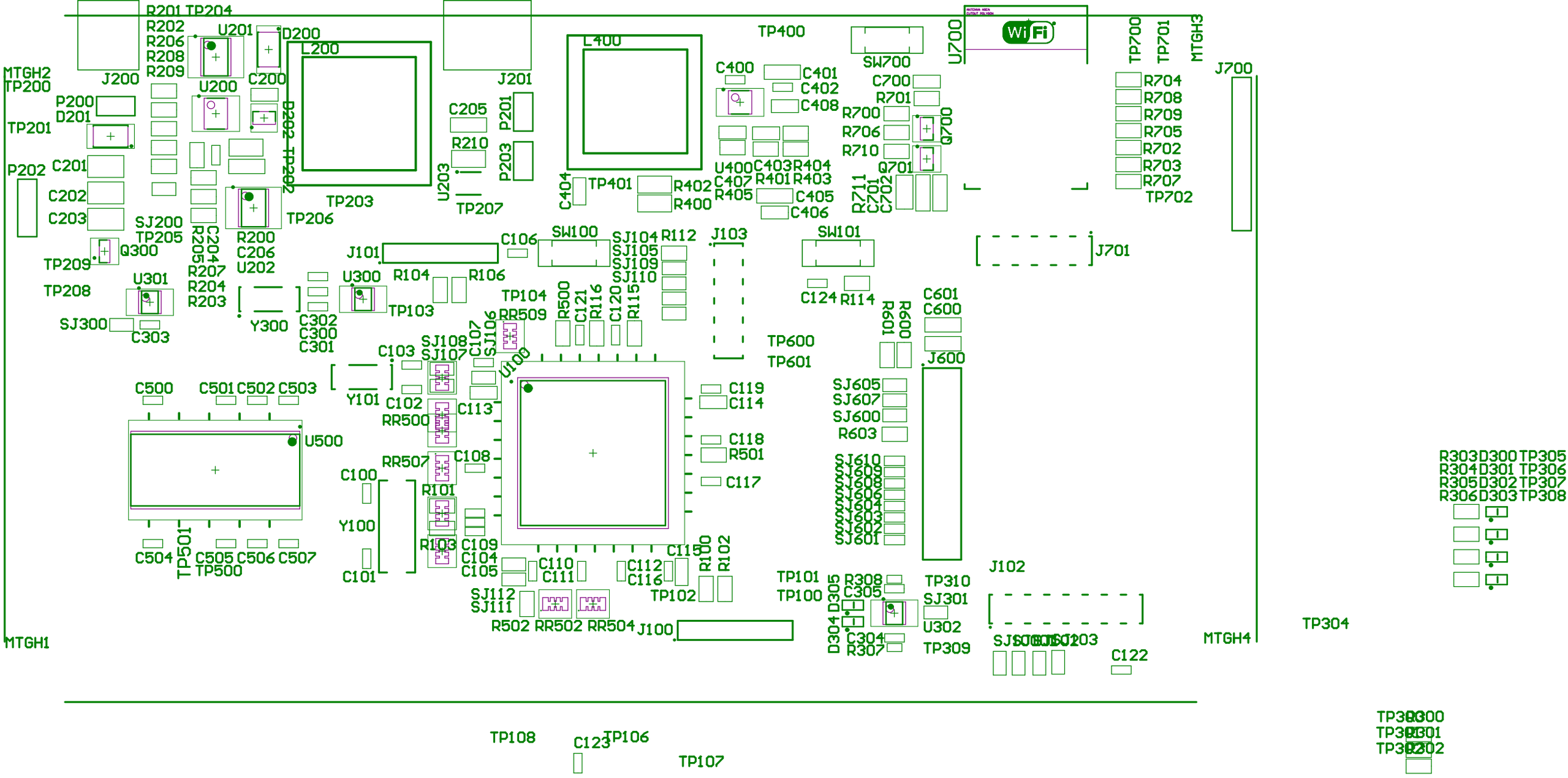
R201 TP204
R202
R206
R208
R209
U201
D200
L200
J200
MTGH2
TP200
P200
D201
TP201
U200
C200
P202
C201
C202
C203
SJ200
TP205
Q300
TP209
TP208
U301
SJ300
C303
R205
C204
R207
R204
R203
R200
C206
U202
TP206
TP203
TP202
J201
P201
C205
R210
P203
U203
TP207
L400
C404
TP401
R402
R400
TP400
C400
C401
C402
C408
U400
C403
R404
C407
R401
R403
R405
C405
C406
SW700
C700
R701
R700
R706
R710
Q700
Q701
R711
C701
C702
U700
WiFi
TP700
TP701
MTGH3
R704
R708
R709
R705
R702
R703
R707
TP702
J700
J101
C106
SW100
SJ104
SJ105
SJ109
SJ110
R112
J103
SW101
J701
R104
R106
U300
TP103
TP104
RR509
R500
C121
R116
C120
R115
C124
R114
R601
R600
C601
C600
J600
TP600
TP601
C302
C300
C301
Y300
C103
SJ108
SJ107
C107
SJ106
U100
Y101
C102
RR500
C113
C500
C501
C502
C503
U500
C119
C114
C118
R501
C117
SJ605
SJ607
SJ600
R603
SJ610
SJ609
SJ608
SJ606
SJ604
SJ603
SJ602
SJ601
RR507
C108
C100
R101
Y100
R103
C109
C104
C105
C504
TP501
C505
C506
C507
TP500
C101
C110
C111
C112
C116
C115
R100
R102
TP102
SJ112
SJ111
R502
RR502
RR504
J100
TP101
TP100
R308
C305
TP310
SJ301
U302
D304
D305
C304
R307
TP309
J102
SJ603
SJ602
SJ601
C122
MTGH1
MTGH4
TP304
R303
D300
TP305
R304
D301
TP306
R305
D302
TP307
R306
D303
TP308
TP108
C123
TP106
TP107
TP309
TP301
TP302

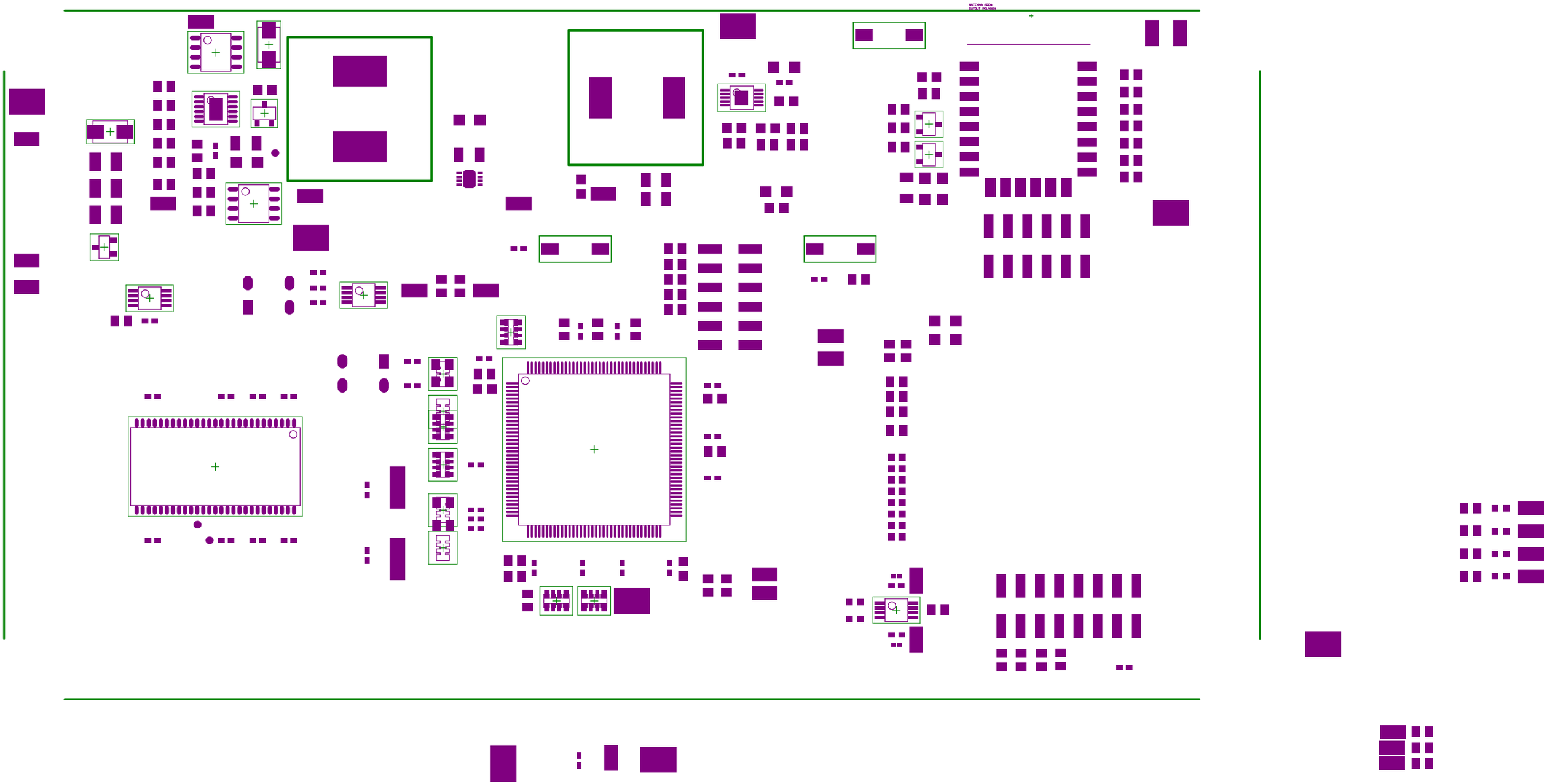
ANTENNA AREA
OUTLAY PER NEED

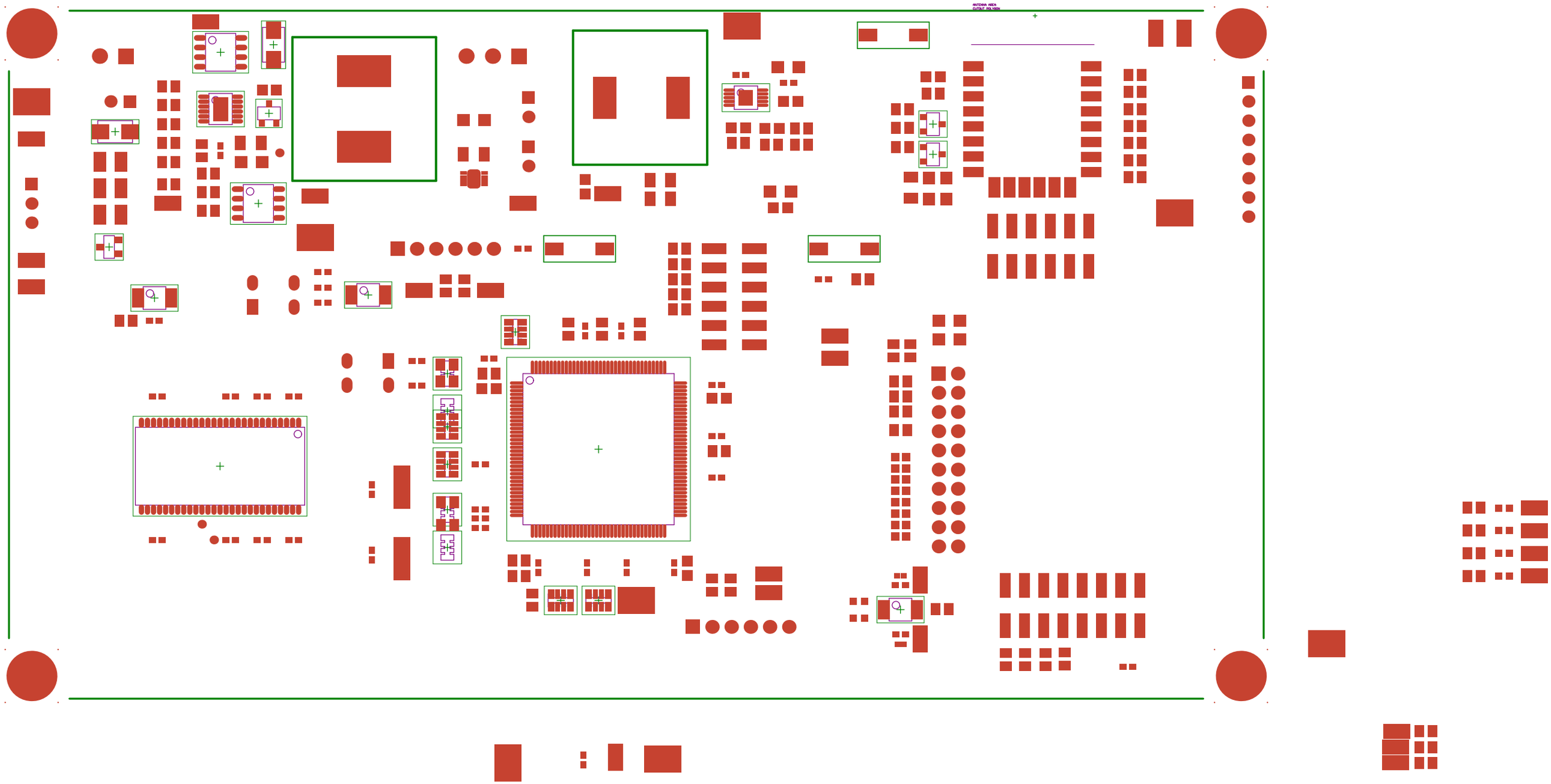
ANTENNA AREA
OUTLAY PROHIBIT

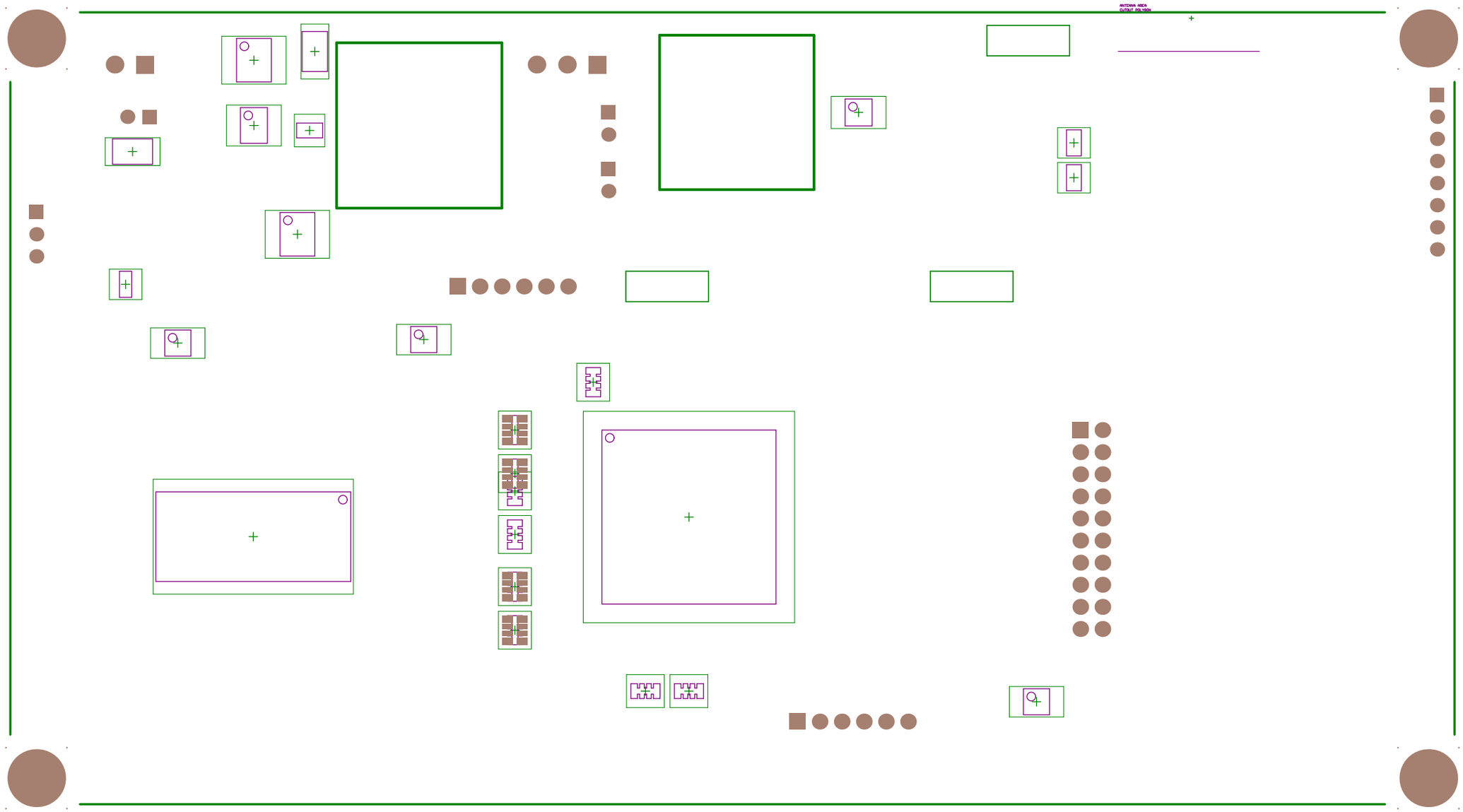
ANTENNA AREA
OUTLAY PA/LNA

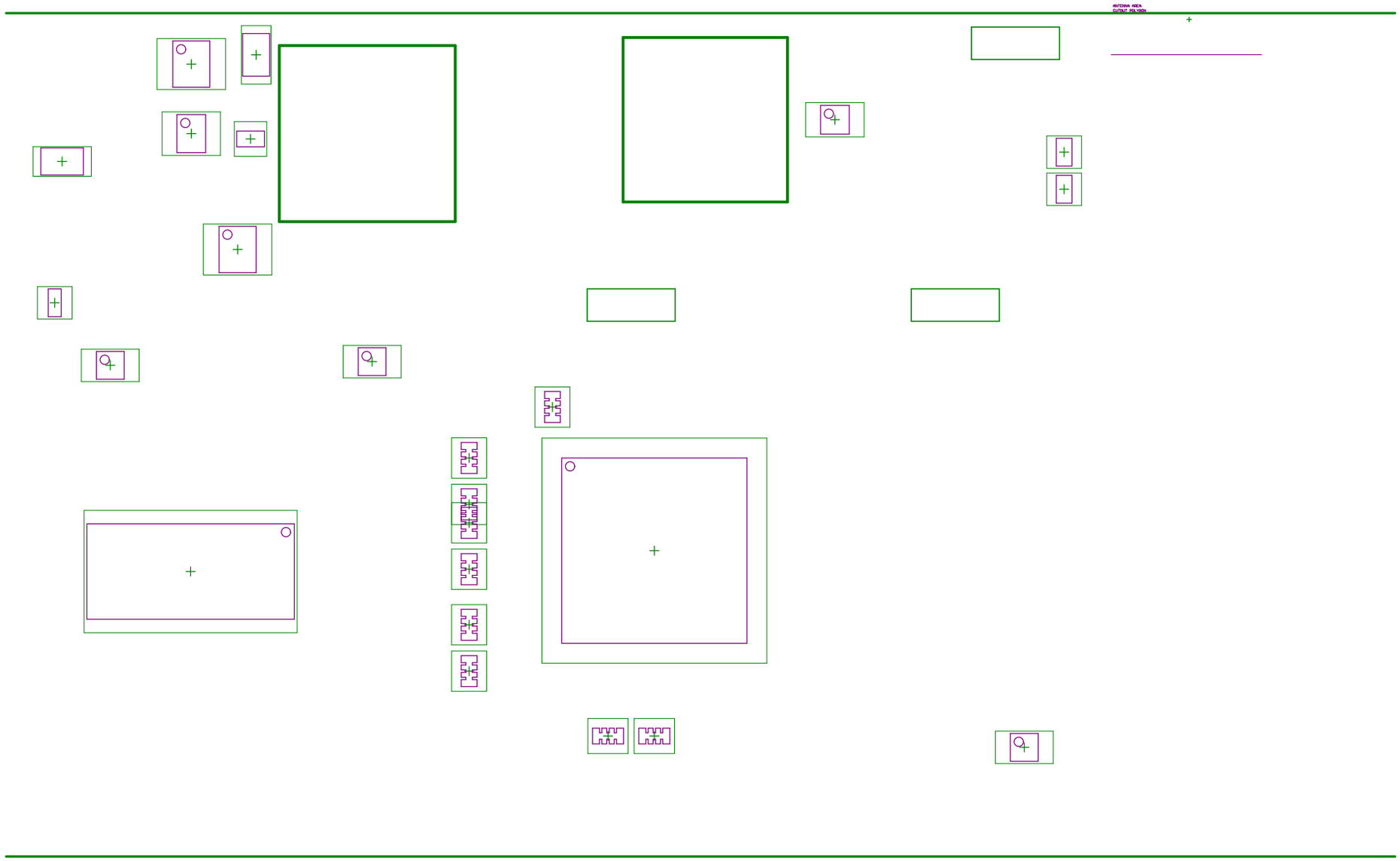
ANTENNA AREA
OUTLAY FOR VIEW

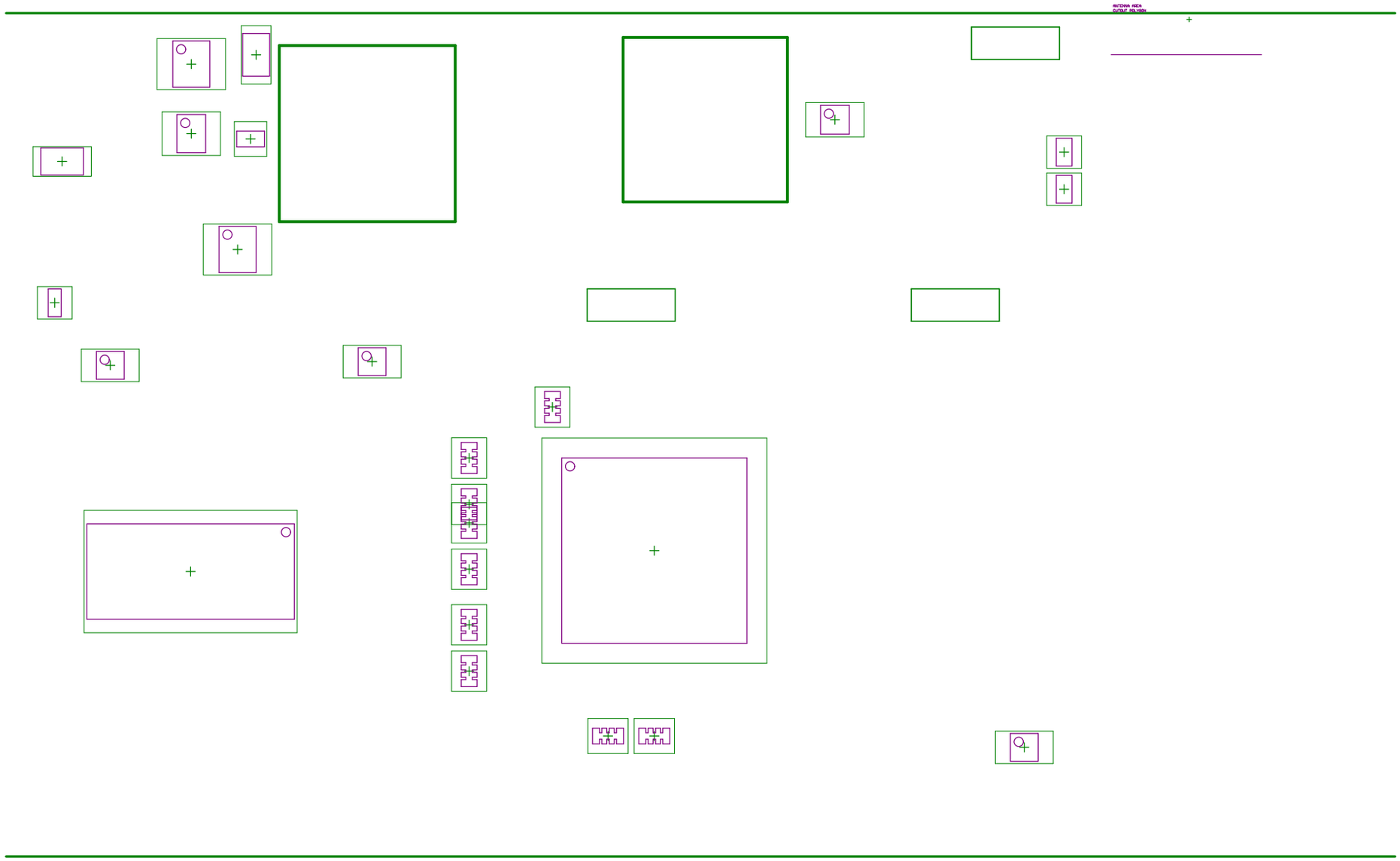
ANTENNA AREA
OUTLAY FOR VIEW

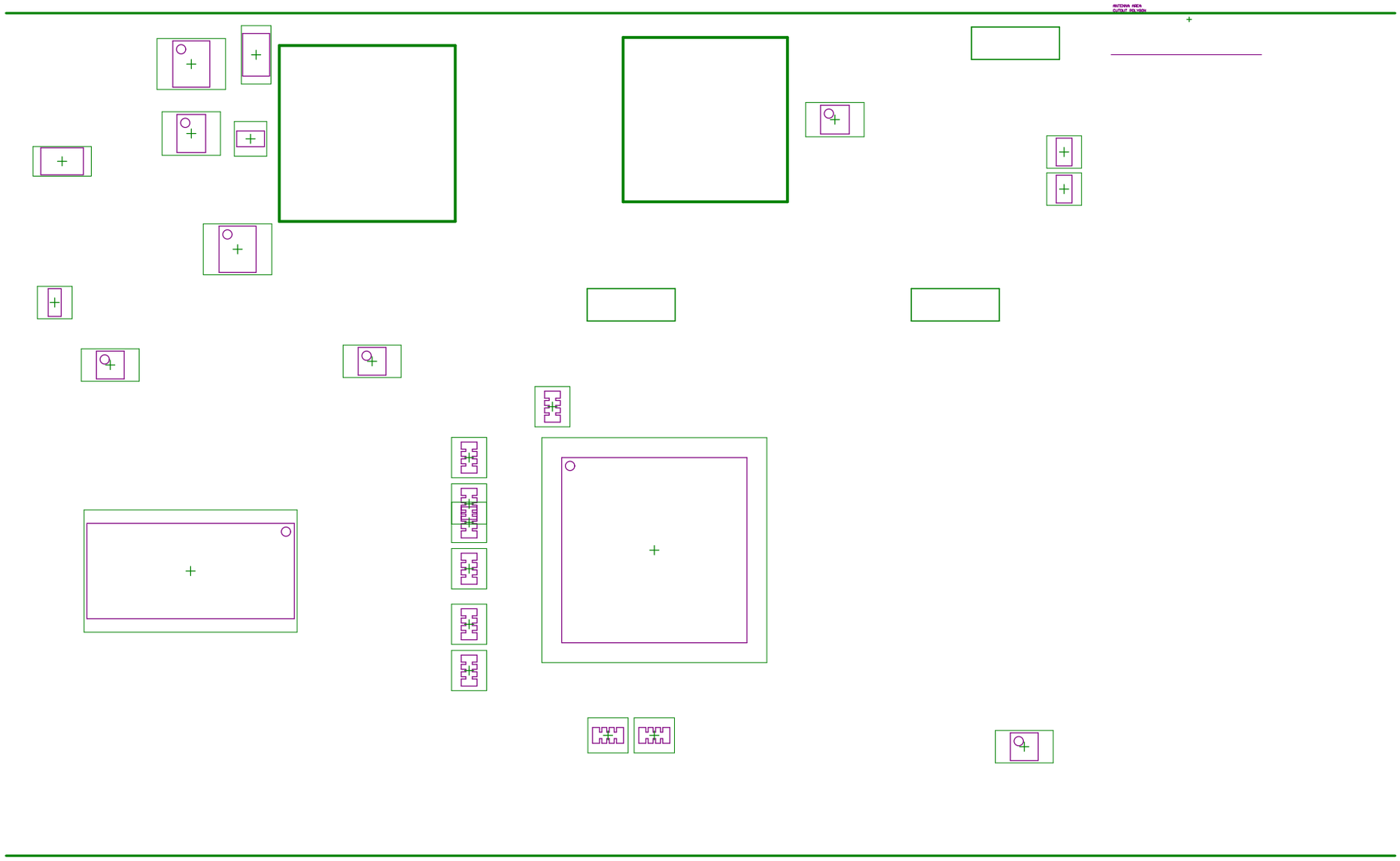
ANTENNA AREA
OUTLAY FOR NEAR

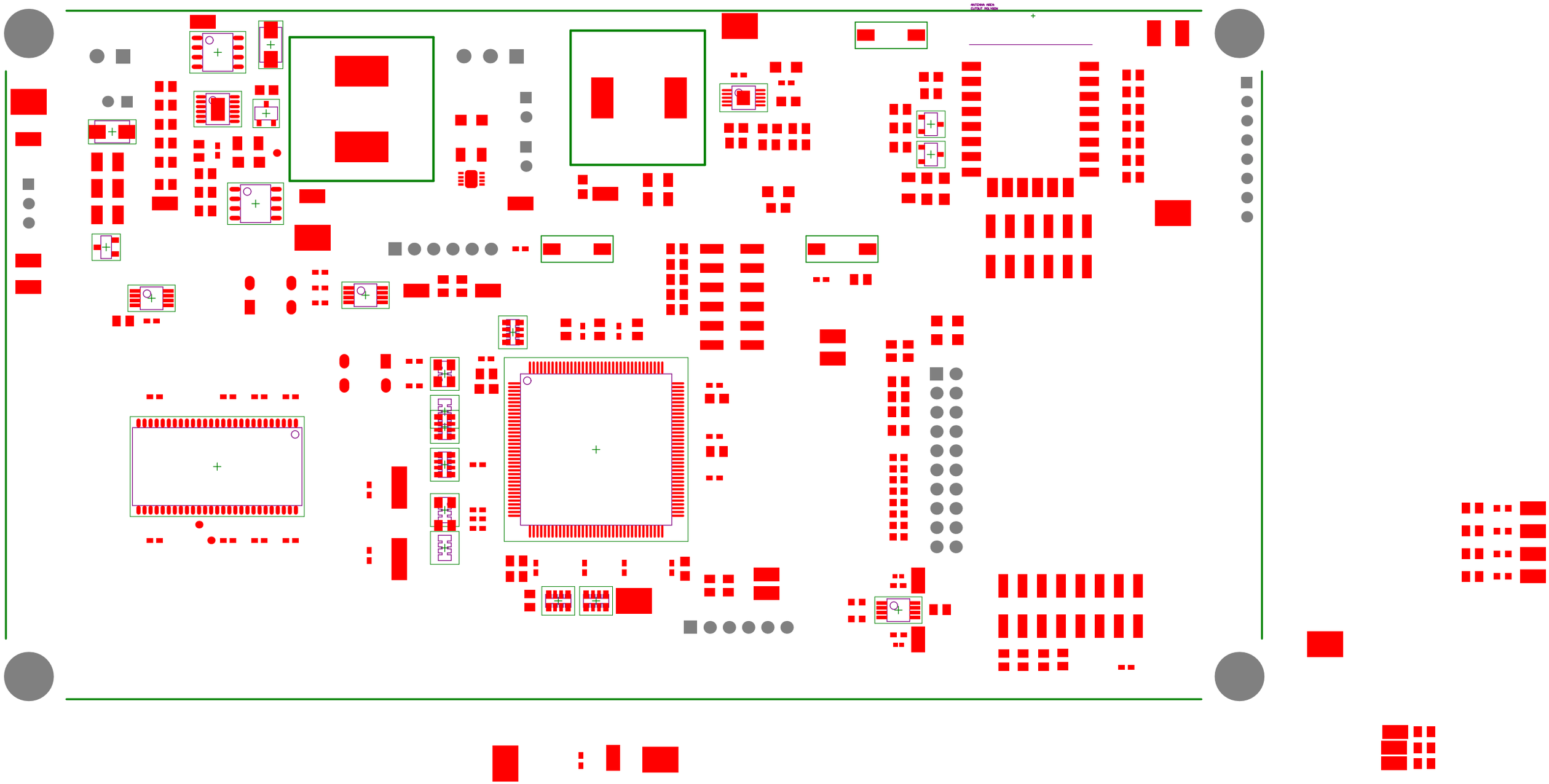
ANTENNA AREA
OUTLAY PROHIBIT

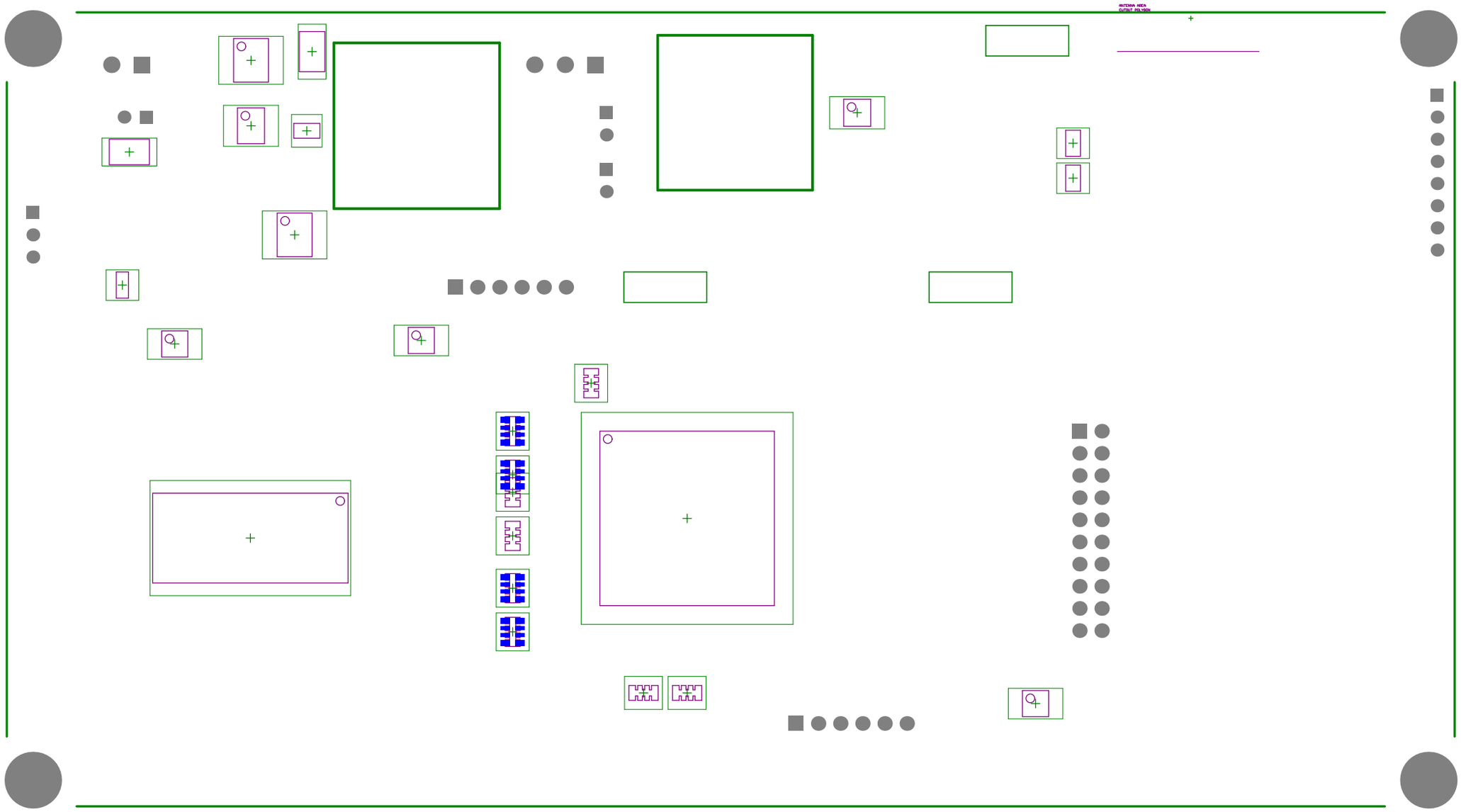
ANTENNA AREA
OUTLAY PROHIBIT

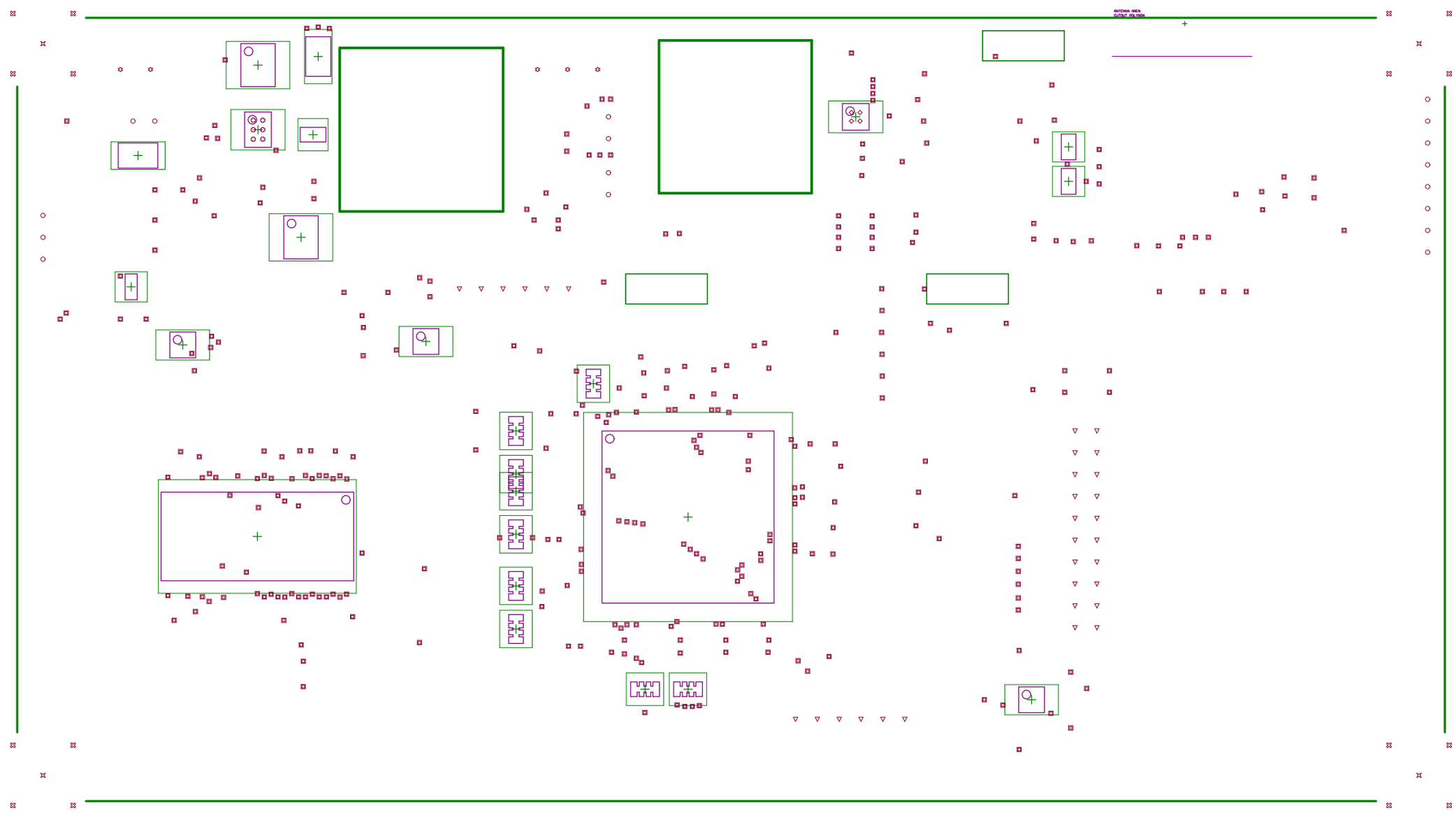
ANTENNA AREA
OUTLAY PA/LNA

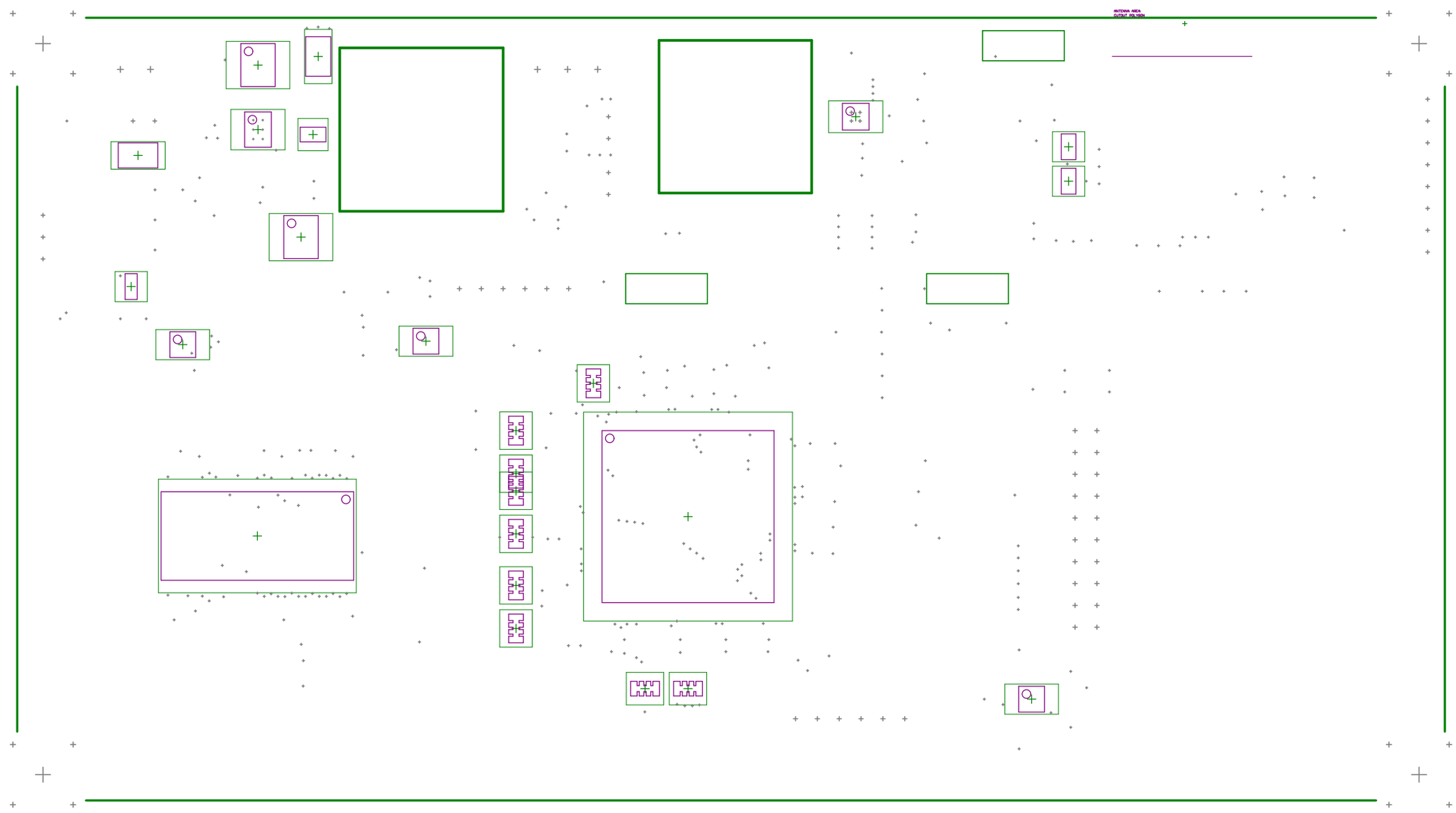
ANTENNA AREA
OUTLAY FOR NEAR