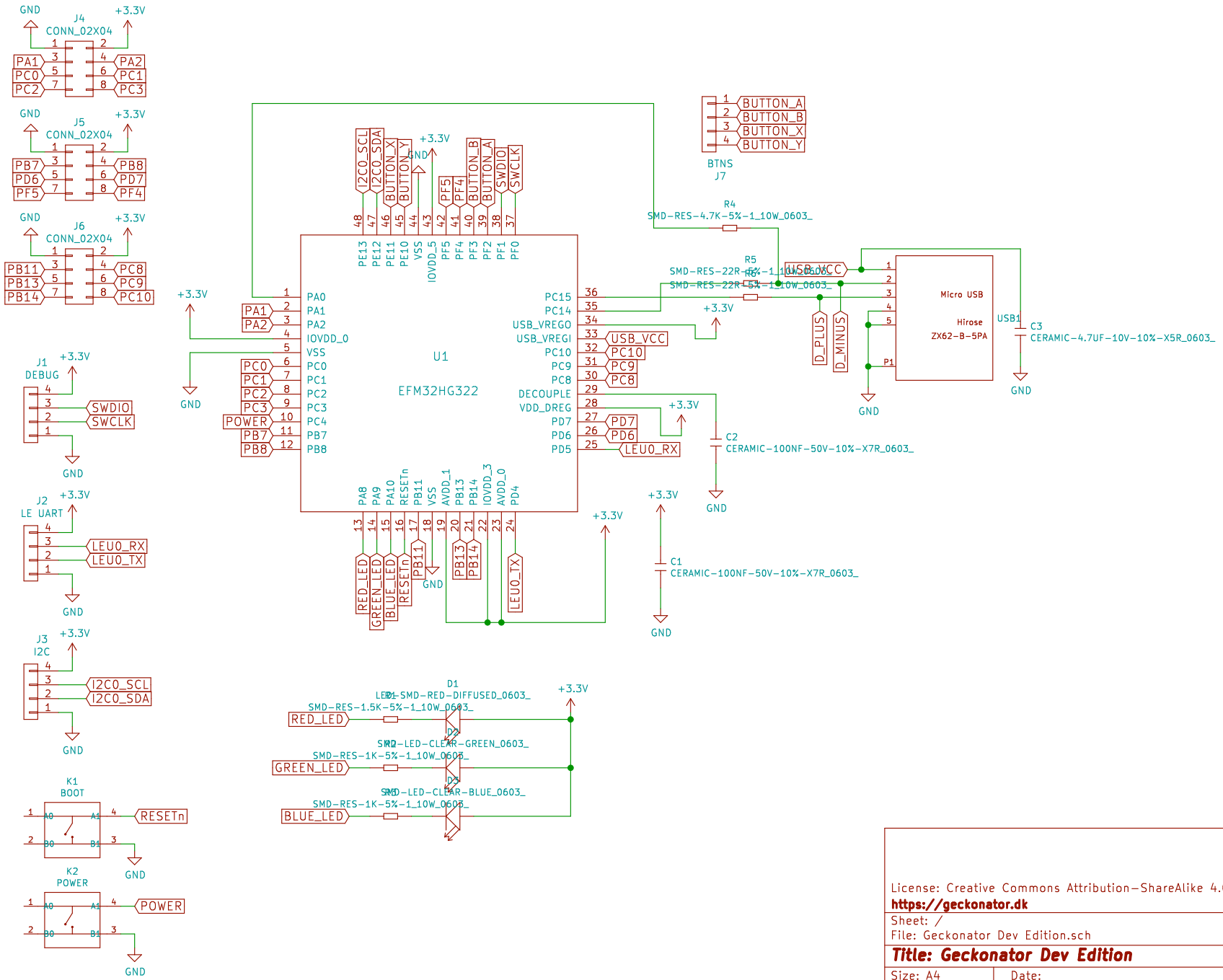

License: Creative Commons Attribution-ShareAlike 4.0 International License (CC BY-SA 4.0)

https://geckonator.dk

Sheet: /

File: Geckonator Dev Edition.sch

Title: Geckonator Dev Edition

Size: A4	Date:	Rev:
KiCad E.D.A. kicad (5.0.0-rc2-dev-222-g3b0a758)		Id: 1/1