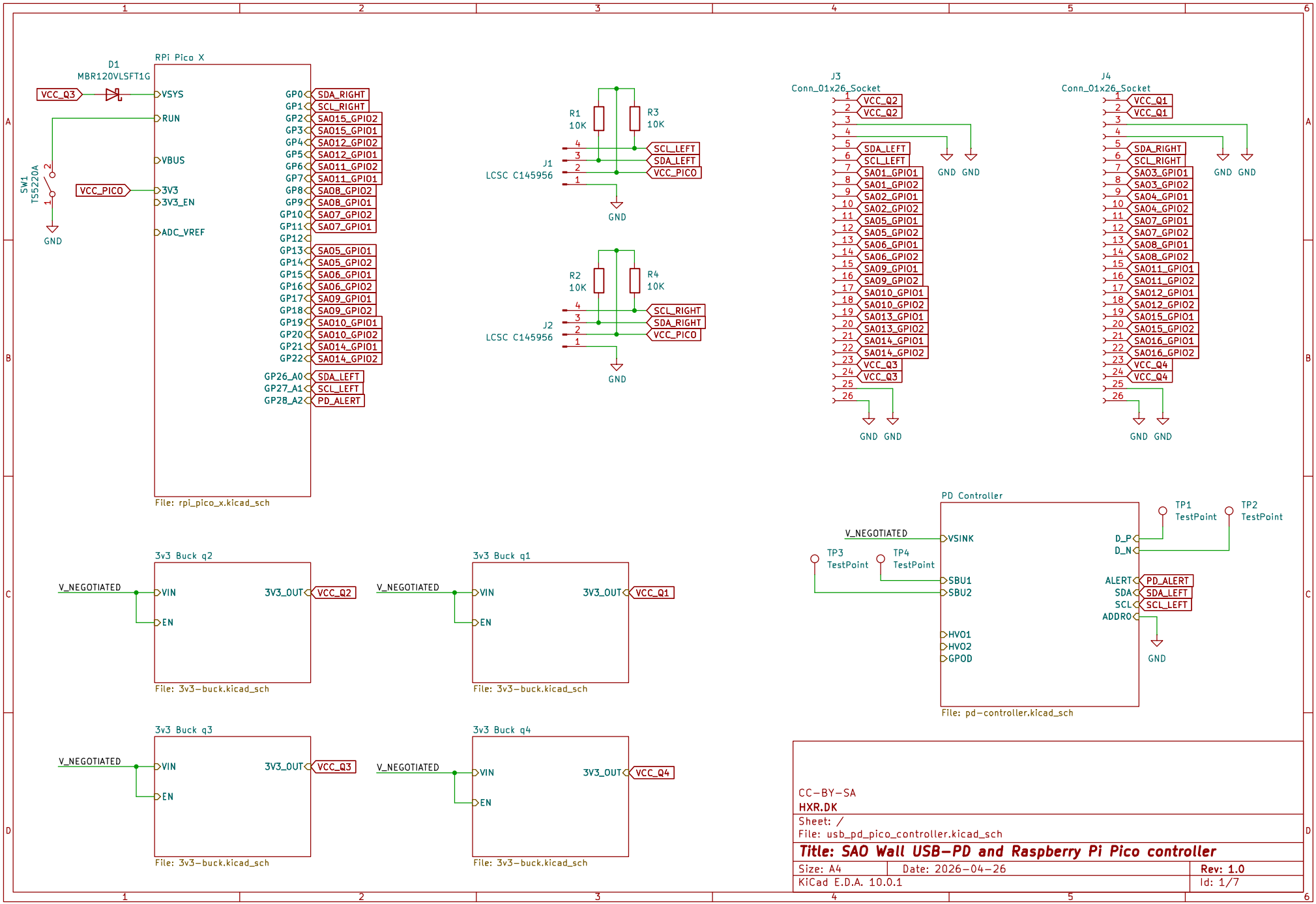

CC-BY-SA

HXR.DK

Sheet: /

File: usb_pd_pico_controller.kicad_sch

Title: SAO Wall USB-PD and Raspberry Pi Pico controller

Size: A4	Date: 2026-04-26	Rev: 1.0
KiCad E.D.A. 10.0.1		Id: 1/7

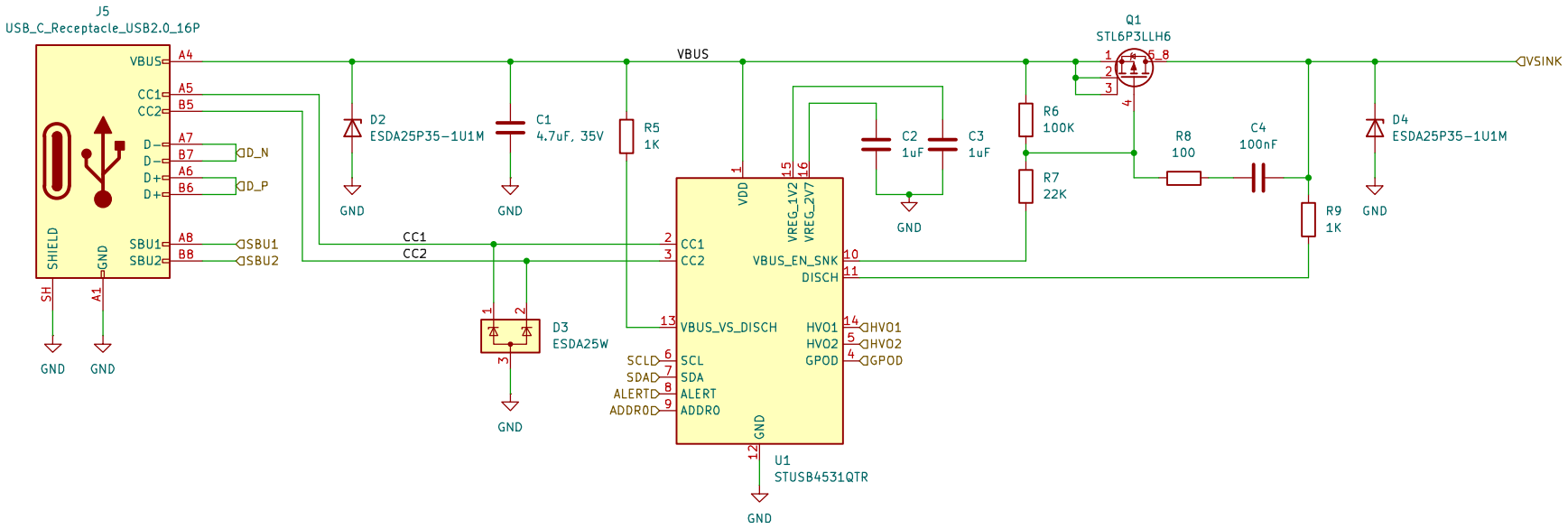

CC−BY−SA

HXR.DK

Sheet: /PD Controller/
File: pd−controller.kicad_sch

Title: USB−C PD Controller based on STUSB4531

Size: A4	Date: 2026−04−05	**Rev: 1.0**
KiCad E.D.A. 10.0.1		Id: 2/7

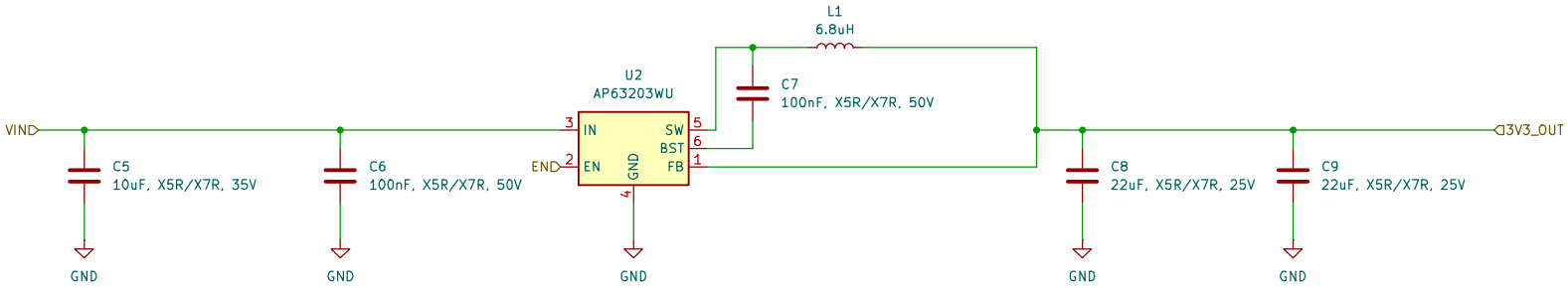

CC-BY-SA

HXR.DK

Sheet: /3v3 Buck q1/
File: 3v3-buck.kicad_sch

Title: 3.3V buck converter

Size: A4	Date: 2026-04-05	Rev: 1.0
KiCad E.D.A. 10.0.1		Id: 3/7

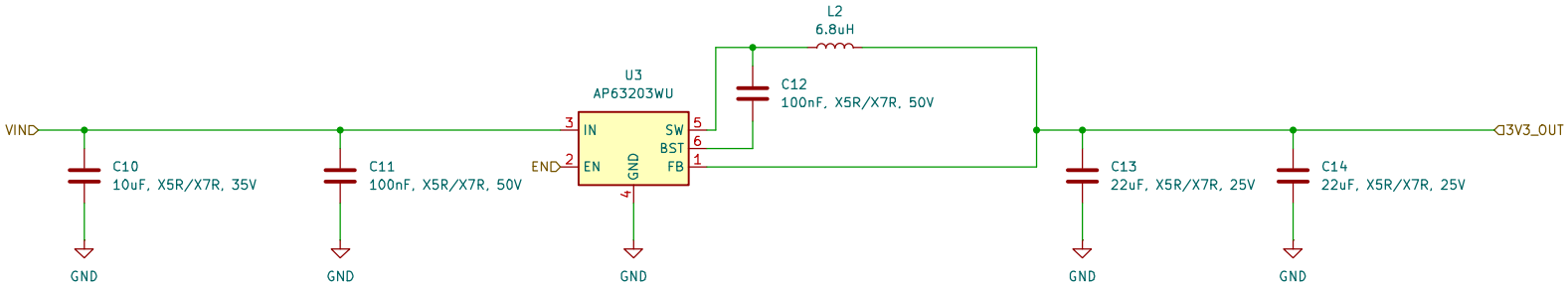

CC-BY-SA

HXR.DK

Sheet: /3v3 Buck q2/
File: 3v3-buck.kicad_sch

Title: 3.3V buck converter

Size: A4	Date: 2026-04-05	Rev: 1.0
KiCad E.D.A. 10.0.1		Id: 4/7

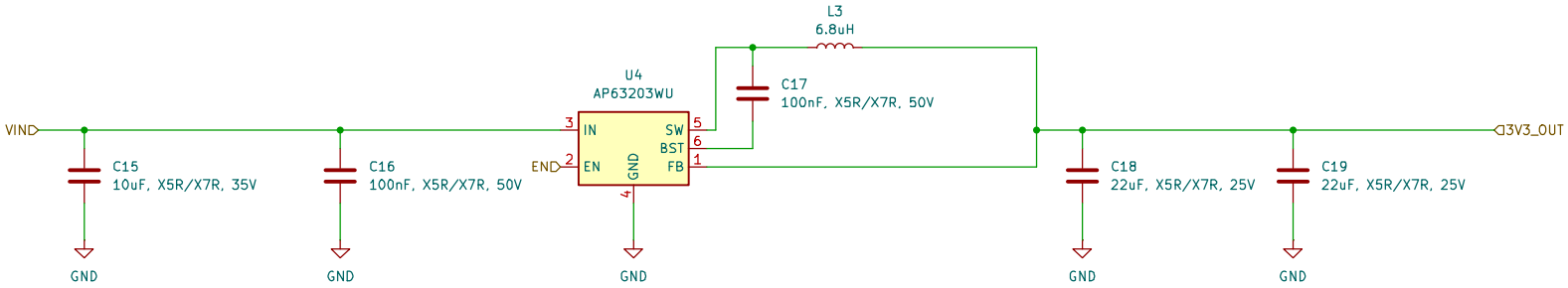

CC-BY-SA

HXR.DK

Sheet: /3v3 Buck q3/
File: 3v3-buck.kicad_sch

Title: 3.3V buck converter

Size: A4	Date: 2026-04-05	**Rev: 1.0**
KiCad E.D.A. 10.0.1		Id: 5/7

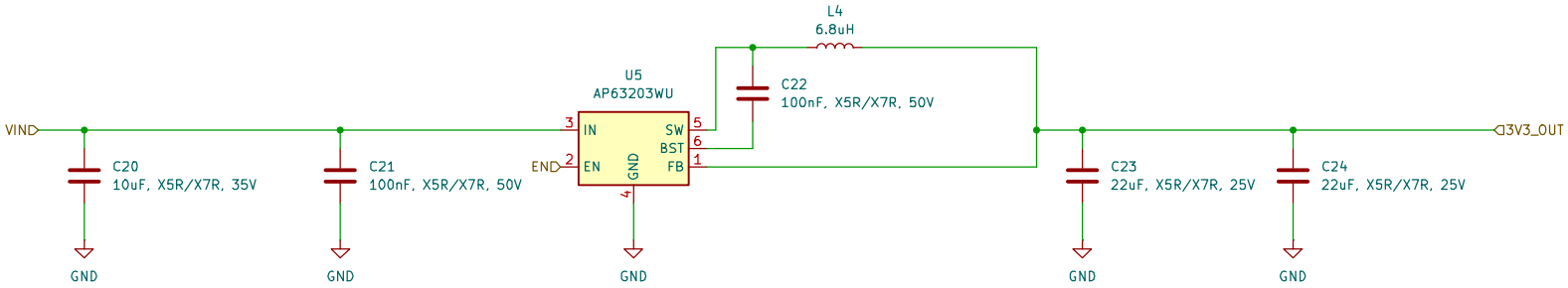

CC-BY-SA

HXR.DK

Sheet: /3v3 Buck q4/
File: 3v3-buck.kicad_sch

Title: 3.3V buck converter

Size: A4	Date: 2026-04-05	Rev: 1.0
KiCad E.D.A. 10.0.1		Id: 6/7

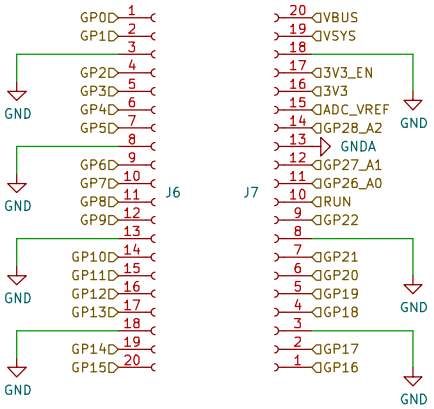

HXR.DK

Sheet: /RPi Pico X/

File: rpi_pico_x.kicad_sch

Title: Raspberry Pi Pico (1, 1w, 2)

Size: A4	Date: 2024-09-21	Rev: 1.0
KiCad E.D.A. 10.0.1		Id: 7/7