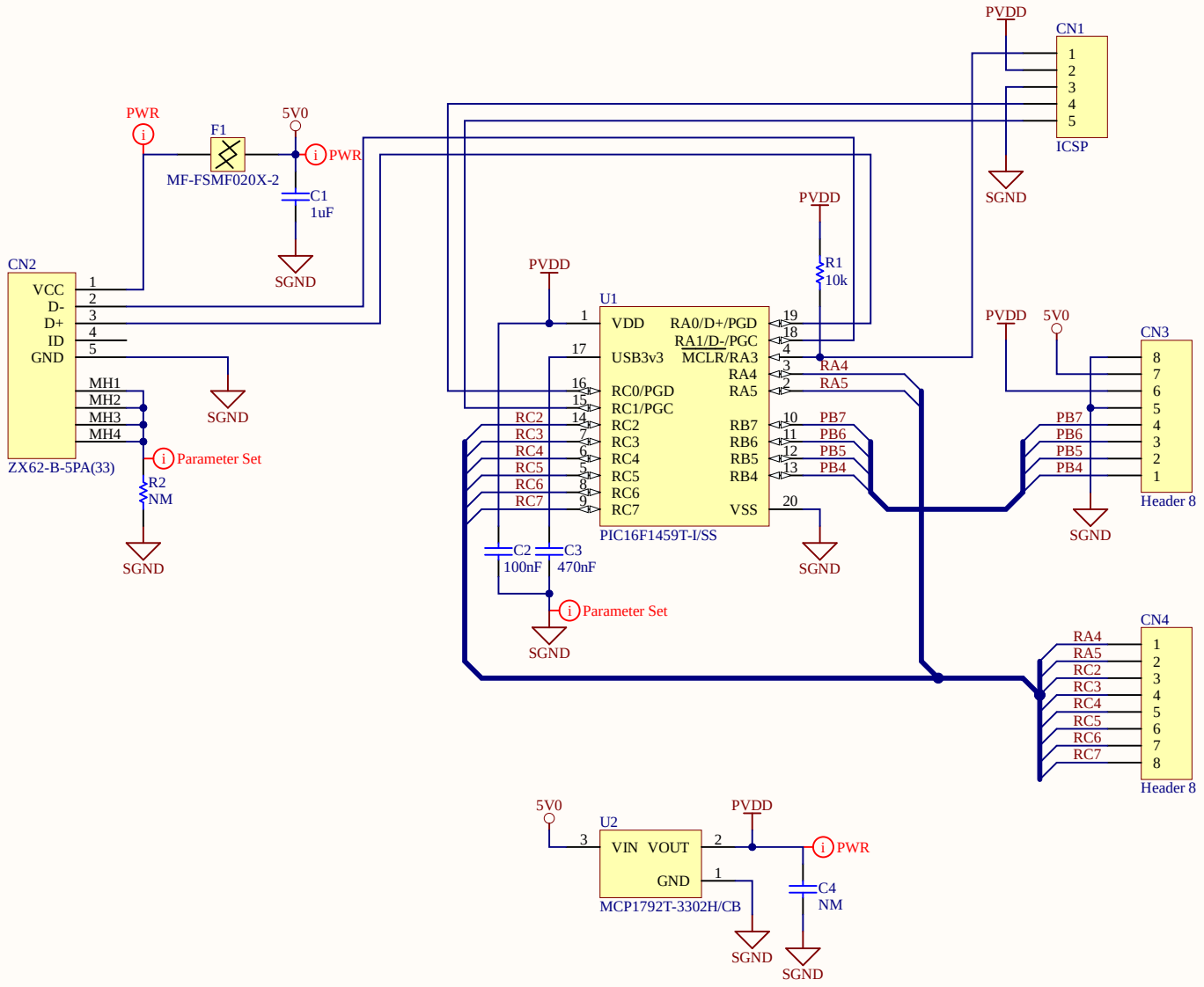

Title USB_PIC16F1459		
Size A4	Author fly-agaric02	Revision 1.1
	Page 1 / 1	