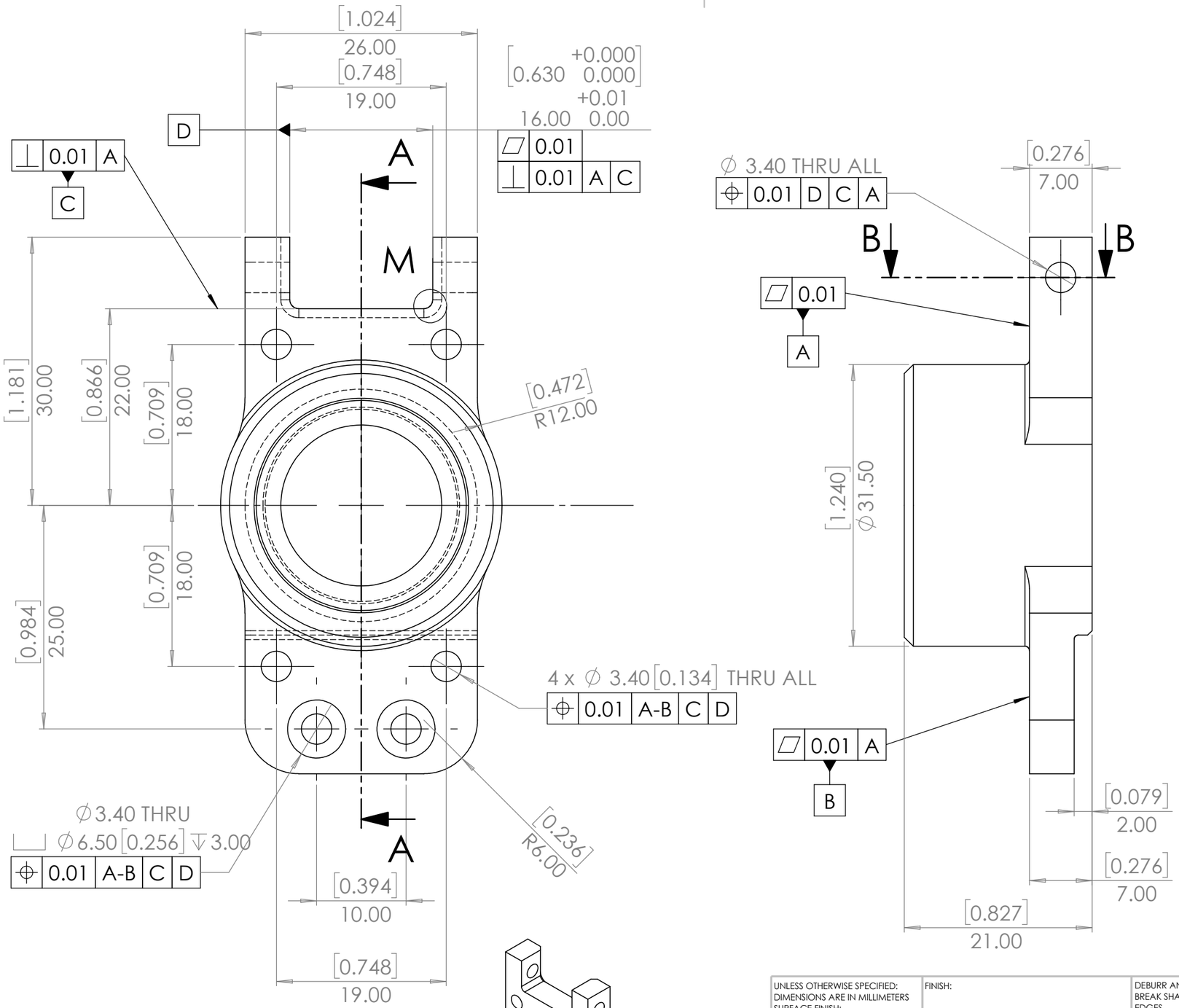

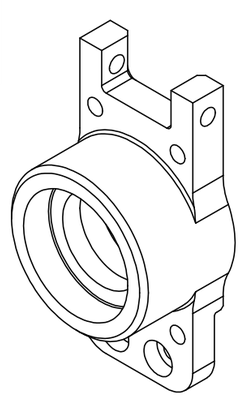

NOTE:
1. ALL FILLETS UNLESS SPECIFIED ARE R0.25mm.

UNLESS OTHERWISE SPECIFIED: DIMENSIONS ARE IN MILLIMETERS SURFACE FINISH: TOLERANCES: LINEAR: ANGULAR:	FINISH:	DEBURR AND BREAK SHARP EDGES	DO NOT SCALE DRAWING	REVISION	
	NAME	SIGNATURE	DATE	TITLE:	
DRAWN					
CHK'D					
APPV'D					
MFG					
Q.A			MATERIAL: 6061 Alloy	DWG NO. front_center	A3
			WEIGHT: 30.47	SCALE:2:1	SHEET 1 OF 2

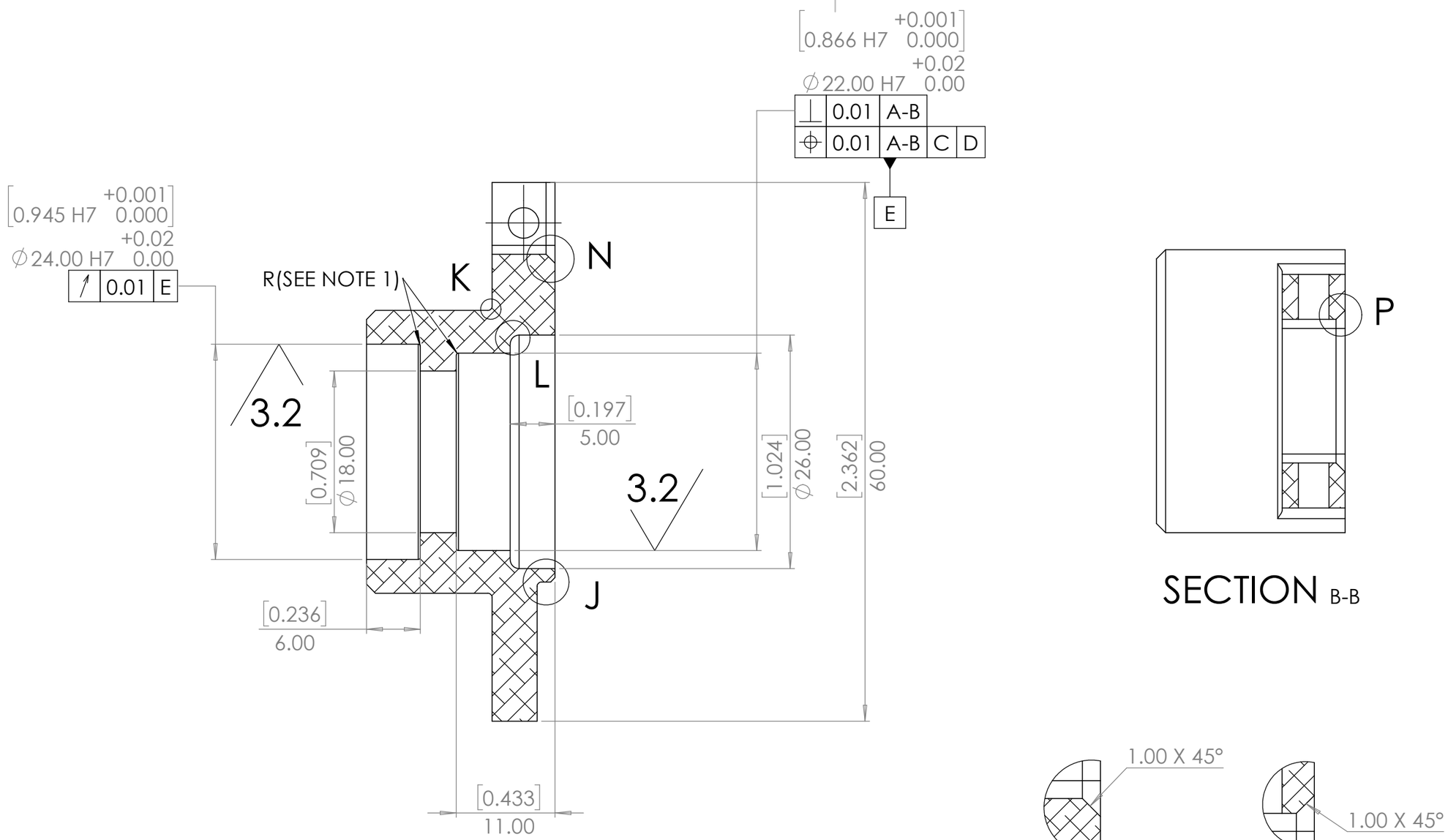

SECTION A-A

SECTION B-B

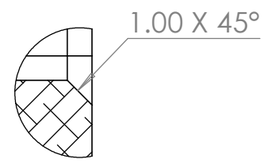

DETAIL N
SCALE 4 : 1

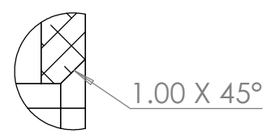

DETAIL P
SCALE 4 : 1

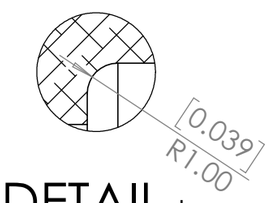

DETAIL L
SCALE 5 : 1

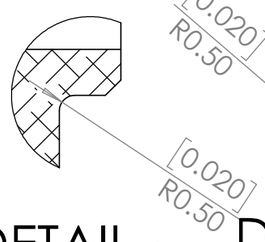

DETAIL J
SCALE 5 : 1

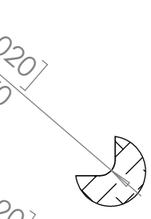

DETAIL K
SCALE 5 : 1

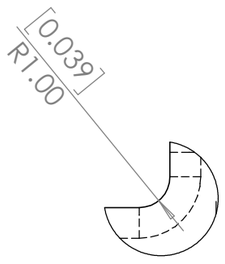

DETAIL M
SCALE 5 : 1

UNLESS OTHERWISE SPECIFIED: DIMENSIONS ARE IN MILLIMETERS SURFACE FINISH: TOLERANCES: LINEAR: ANGULAR:	FINISH:			DEBURR AND BREAK SHARP EDGES		DO NOT SCALE DRAWING	REVISION
	NAME	SIGNATURE	DATE				TITLE:
DRAWN							
CHK'D							
APPV'D							
MFG							
Q.A				MATERIAL: 6061 Alloy		DWG NO. front_center	A3
				WEIGHT: 30.47		SCALE:2:1	SHEET 2 OF 2