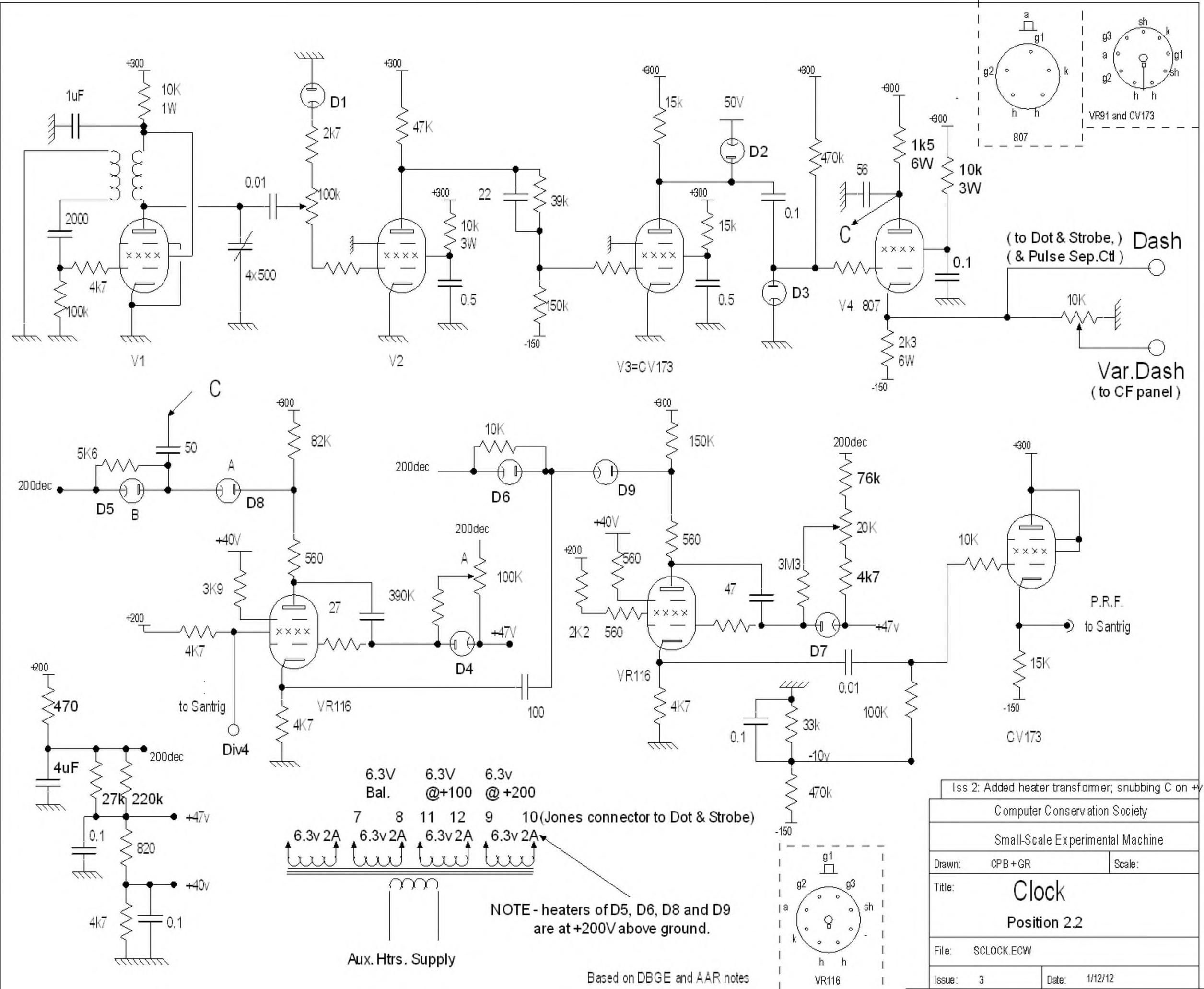
+300
1uF
10K
1W
2000
4k7
100k
V1
0.01
4x500
D1
2k7
100k
47K
22
39k
10k
3W
0.5
150k
-150
V2
15k
50V
D2
0.1
D3
V3=CV173
470k
56
C
1k5
6W
10k
3W
V4 807
2k3
6W
0.1
807
VR91 and CV173
(to Dot & Strobe,)
(& Pulse Sep.Ctl)
Dash
10K
Var.Dash
(to CF panel)
C
50
5K6
200dec
D5
B
A
D8
82K
560
3K9
+40V
+200
4K7
27
390K
VR116
4K7
to Santrig
Div4
100
D6
10K
D9
150K
A
100K
D4
+47V
560
2K2
47
VR116
4K7
0.01
100K
33k
-10v
470k
76k
20K
3M3
4k7
D7
+47v
10K
P.R.F.
to Santrig
15K
CV173
470
4uF
27k
220k
0.1
820
+47v
+40v
4k7
6.3V Bal.
6.3V @+100
6.3v @ +200
7 8 11 12 9 10 (Jones connector to Dot & Strobe)
6.3v 2A
Aux. Htrs. Supply
NOTE - heaters of D5, D6, D8 and D9 are at +200V above ground.
Based on DBGE and AAR notes
g1
g2
g3
a
sh
k
h
VR116
Iss 2: Added heater transformer; snubbing C on +ve dash
Computer Conservation Society
Small-Scale Experimental Machine
Drawn: CPB+GR
Scale:
Title: Clock
Position 2.2
File: SCLOCK.ECW
Issue: 3
Date: 1/12/12