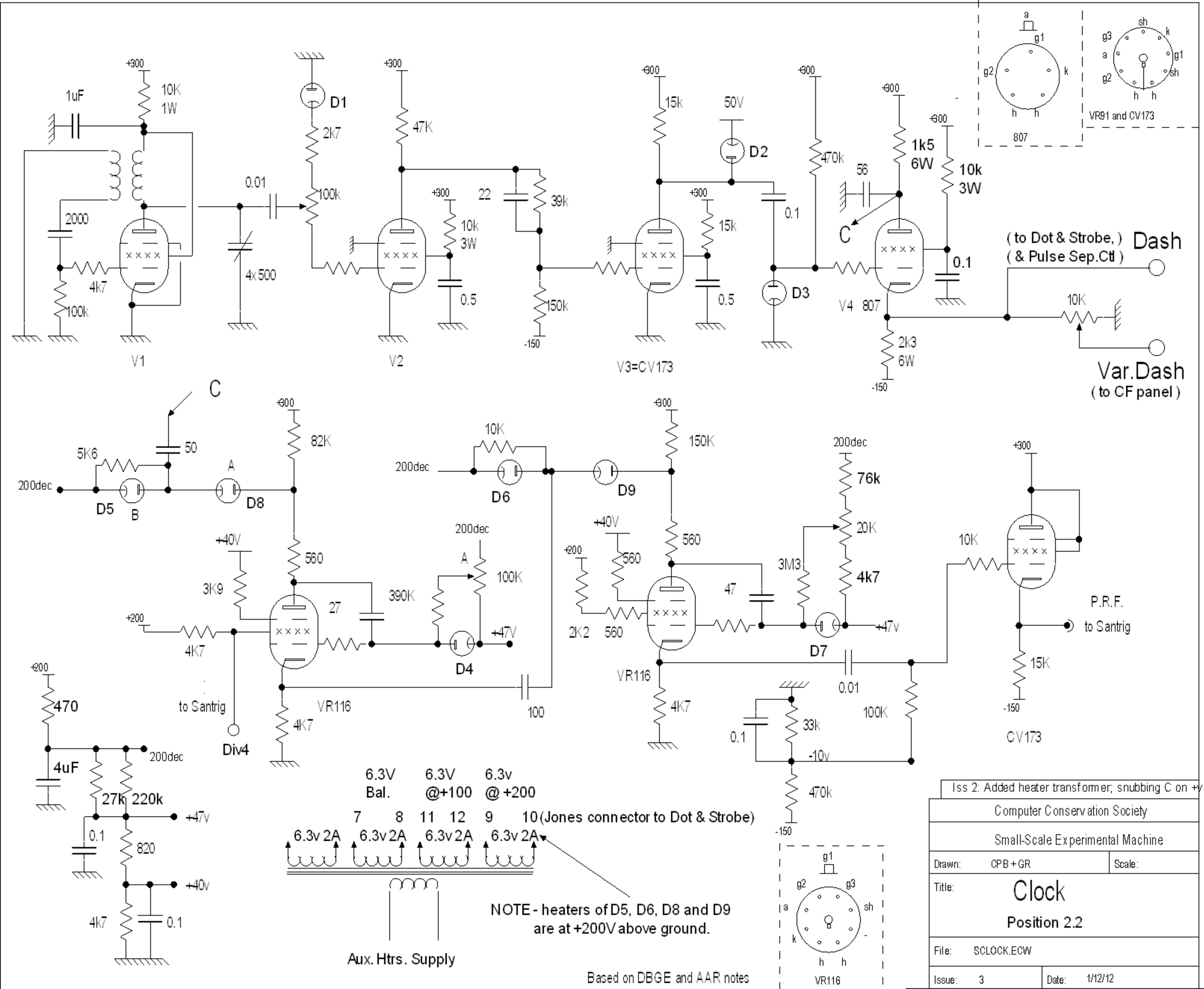

Iss 2: Added heater transformer; snubbing C on +ve dash

Computer Conservation Society	
Small-Scale Experimental Machine	
Drawn: CPB+GR	Scale:
Title: Clock Position 2.2	
File: SCLOCK.ECW	
Issue: 3	Date: 1/12/12