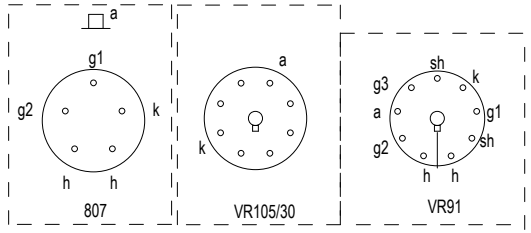

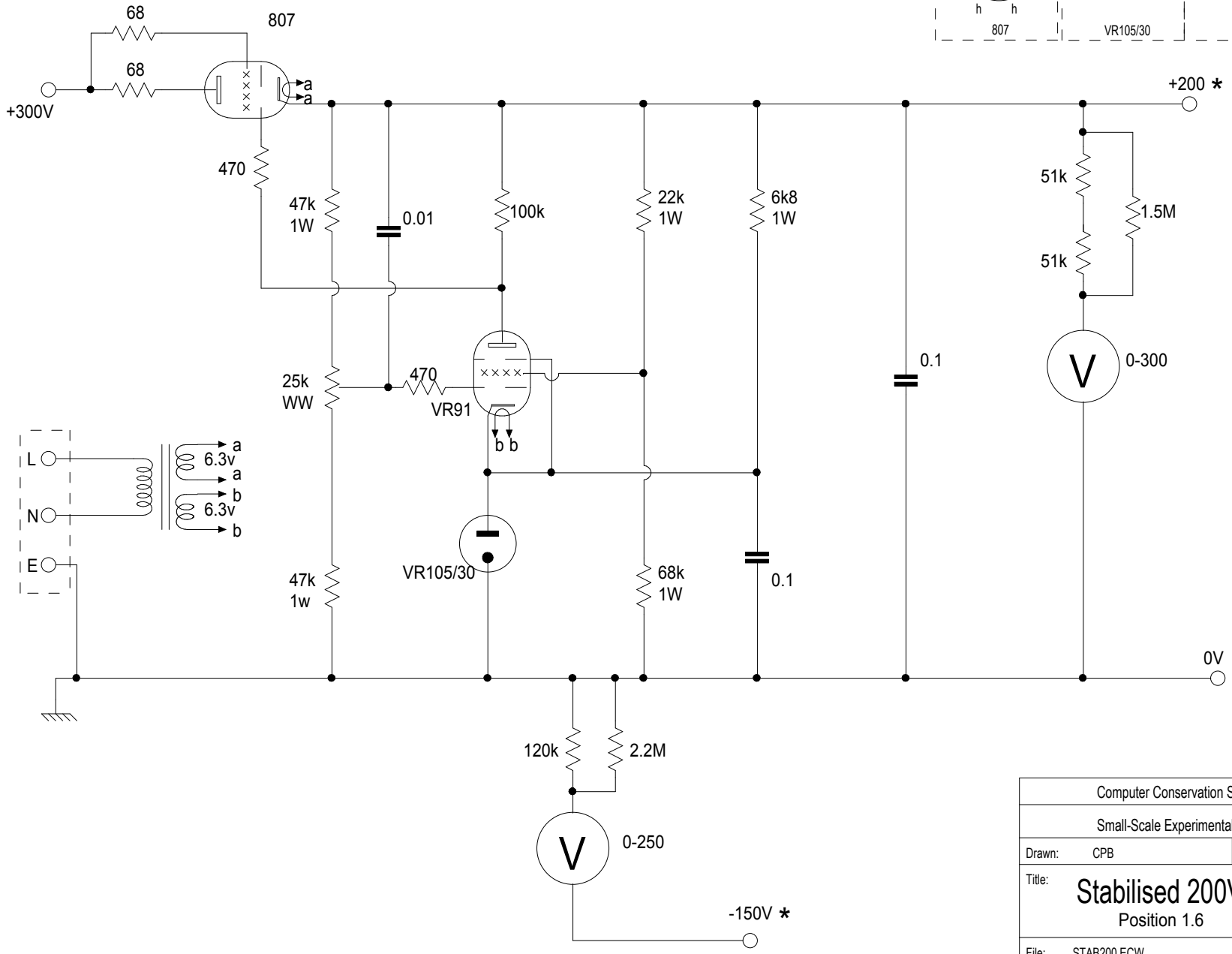

Computer Conservation Society	
Small-Scale Experimental Machine	
Drawn: CPB	Scale:
Title: Stabilised 200V PSU Position 1.6	
File: STAB200.ECW	
Issue: 1	Date: 24 Aug 1997