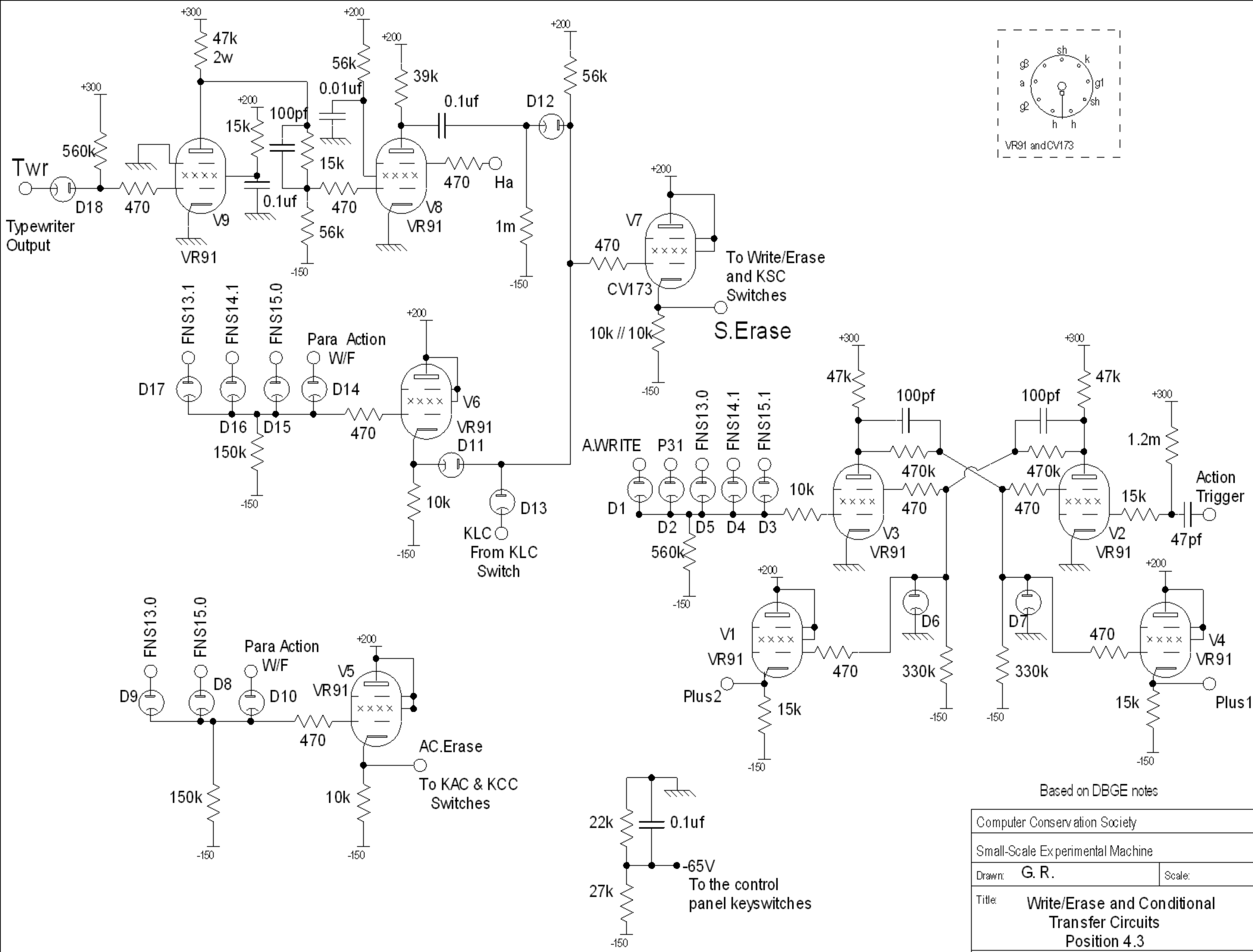

Based on DBGE notes

Computer Conservation Society	
Small-Scale Experimental Machine	
Drawn: G. R.	Scale:
Title: Write/Erase and Conditional Transfer Circuits Position 4.3	
File: wrerccts.ecw	
Issue: 5	Date: 22/10/10