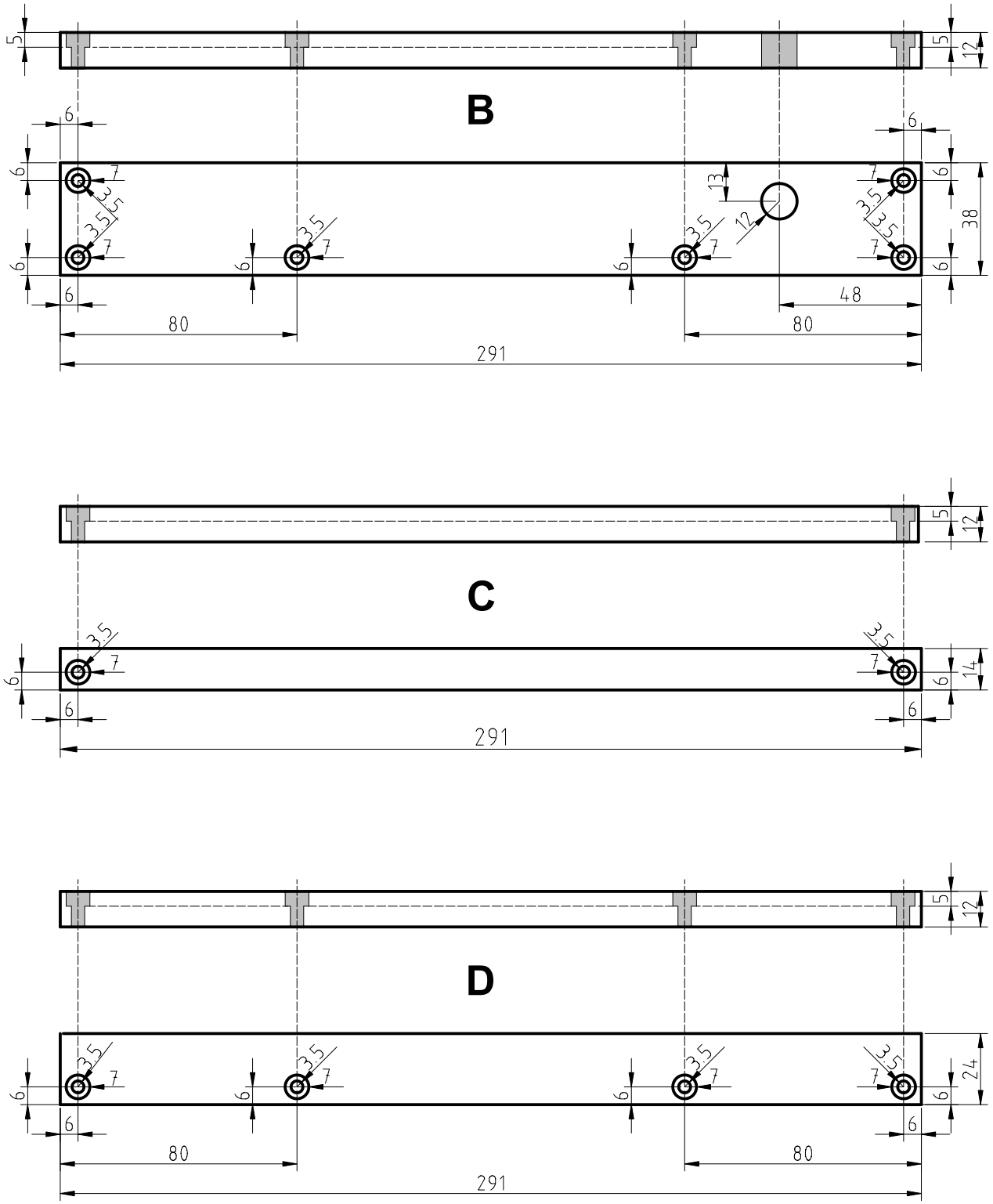

Itemref: B,C,D	Quantity: 3		Article No./Reference	
Designed by:	Checked by:	Approved:	Date: 09/23/2018	Scale: 2:1
B - SBRC Case, Back End 291x38x12 mm C - SBRC Case, Front End 291x14x12 mm (top) D - SBRC Case, Front End 291x24x12 mm (bottom)		Notes:		
		Filename: SBRC BCD end bars v11.dxf		Edition: v1.0 Sheet: 1