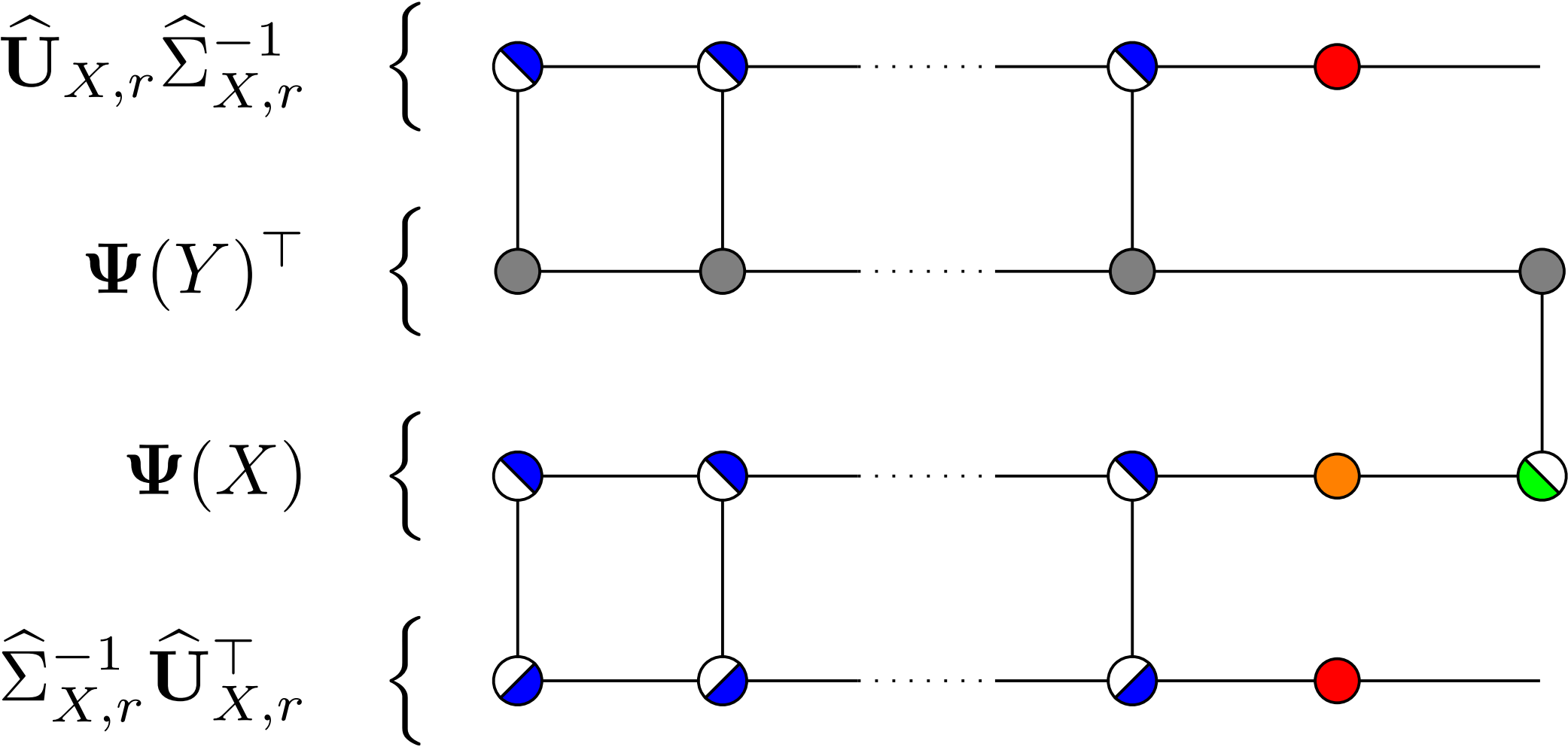
$\widehat{\mathbf{U}}_{X,r}\widehat{\Sigma}_{X,r}^{-1}$
$\mathbf{\Psi}(Y)^\top$
$\mathbf{\Psi}(X)$
$\widehat{\Sigma}_{X,r}^{-1}\widehat{\mathbf{U}}_{X,r}^\top$