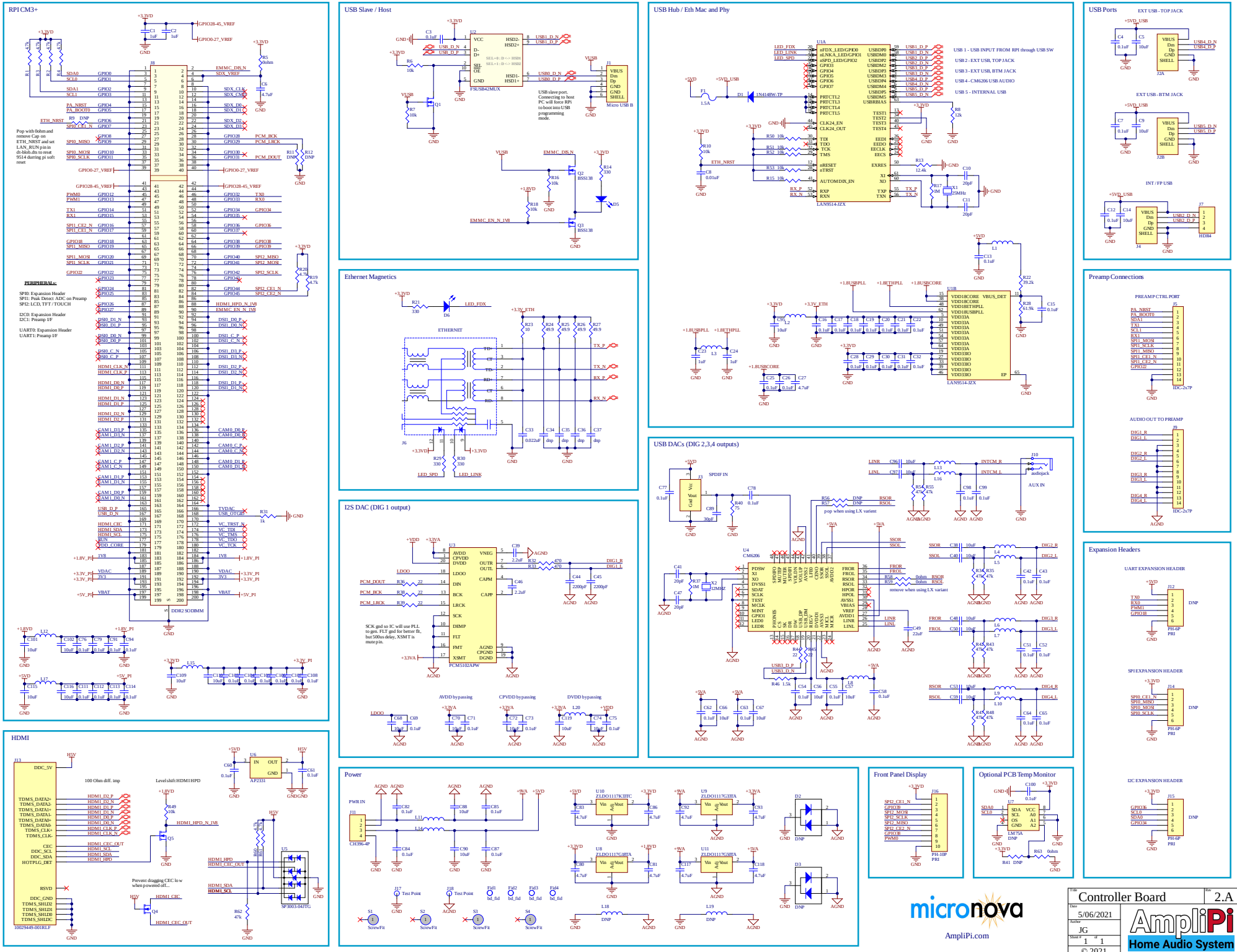
RPI CM3+
USB Slave / Host
USB Hub / Eth Mac and Phy
USB Ports
Ethernet Magnetics
USB DACs (DIG 2,3,4 outputs)
Preamp Connections
I2S DAC (DIG 1 output)
Expansion Headers
HDMI
Power
Front Panel Display
Optional PCB Temp Monitor
micronova
AmpliPi.com
Controller Board
2.A
5/06/2021
JG
1 1
© 2021
AmpliPi
Home Audio System