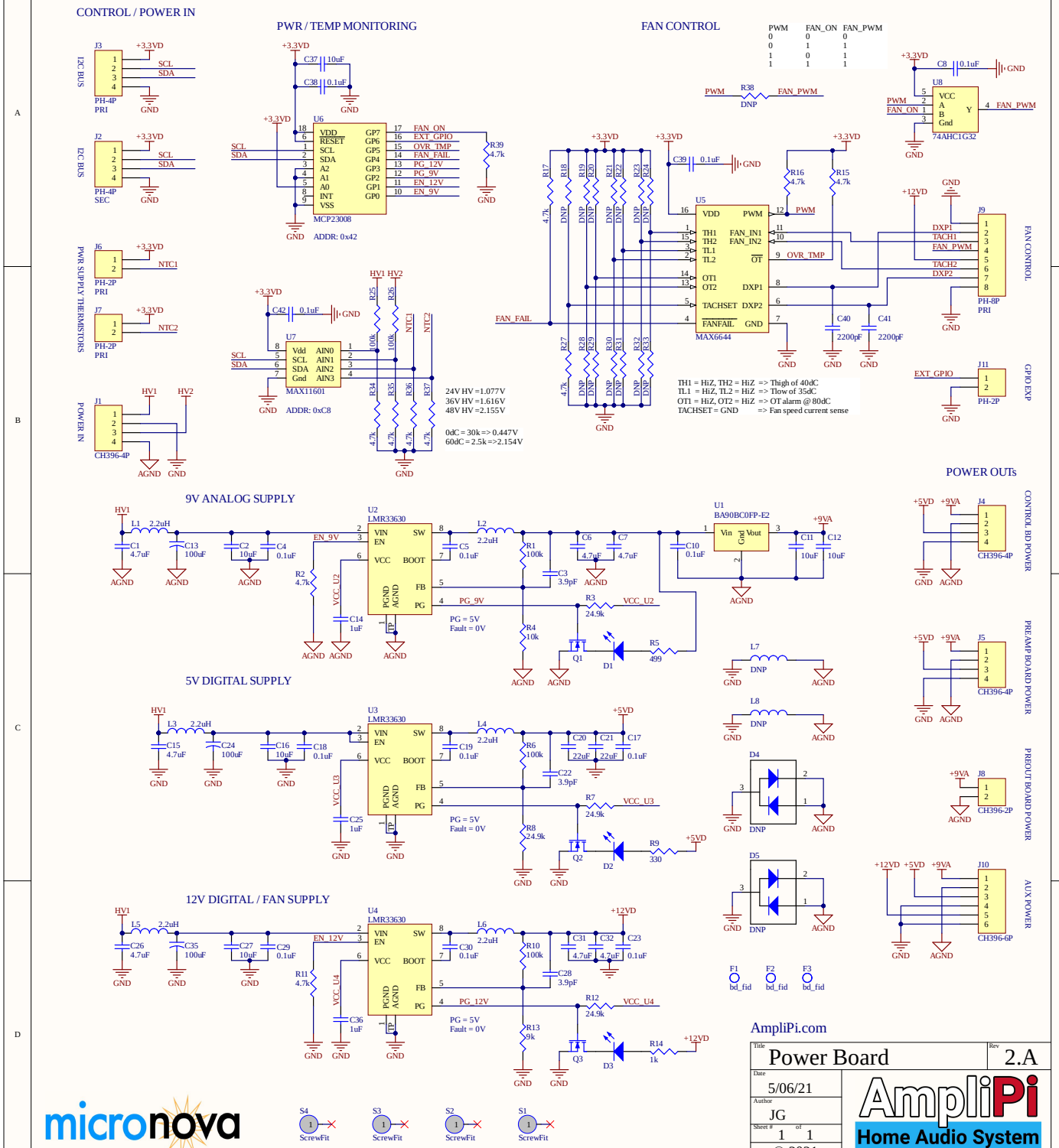
CONTROL / POWER IN
PWR / TEMP MONITORING
FAN CONTROL
9V ANALOG SUPPLY
5V DIGITAL SUPPLY
12V DIGITAL / FAN SUPPLY
POWER OUTs
I2C BUS
PWR SUPPLY THERMISTORS
POWER IN
FAN CONTROL
GPIO EXP
CONTROL BD POWER
PREAMP BOARD POWER
PREOUT BOARD POWER
AUX POWER
MCP23008
ADDR: 0x42
MAX11601
ADDR: 0xC8
MAX6644
LMR33630
BA90BC0FP-E2
74AHC1G32
24V HV =1.077V
36V HV =1.616V
48V HV =2.155V
0dC = 30k => 0.447V
60dC = 2.5k =>2.154V
TH1 = HiZ, TH2 = HiZ => Thigh of 40dC
TL1 = HiZ, TL2 = HiZ => Tlow of 35dC
OT1 = HiZ, OT2 = HiZ => OT alarm @ 80dC
TACHSET = GND => Fan speed current sense
PG = 5V
Fault = 0V
AmpliPi.com
Power Board
2.A
5/06/21
JG
1 of 1
© 2021
AmpliPi
Home Audio System
micronova