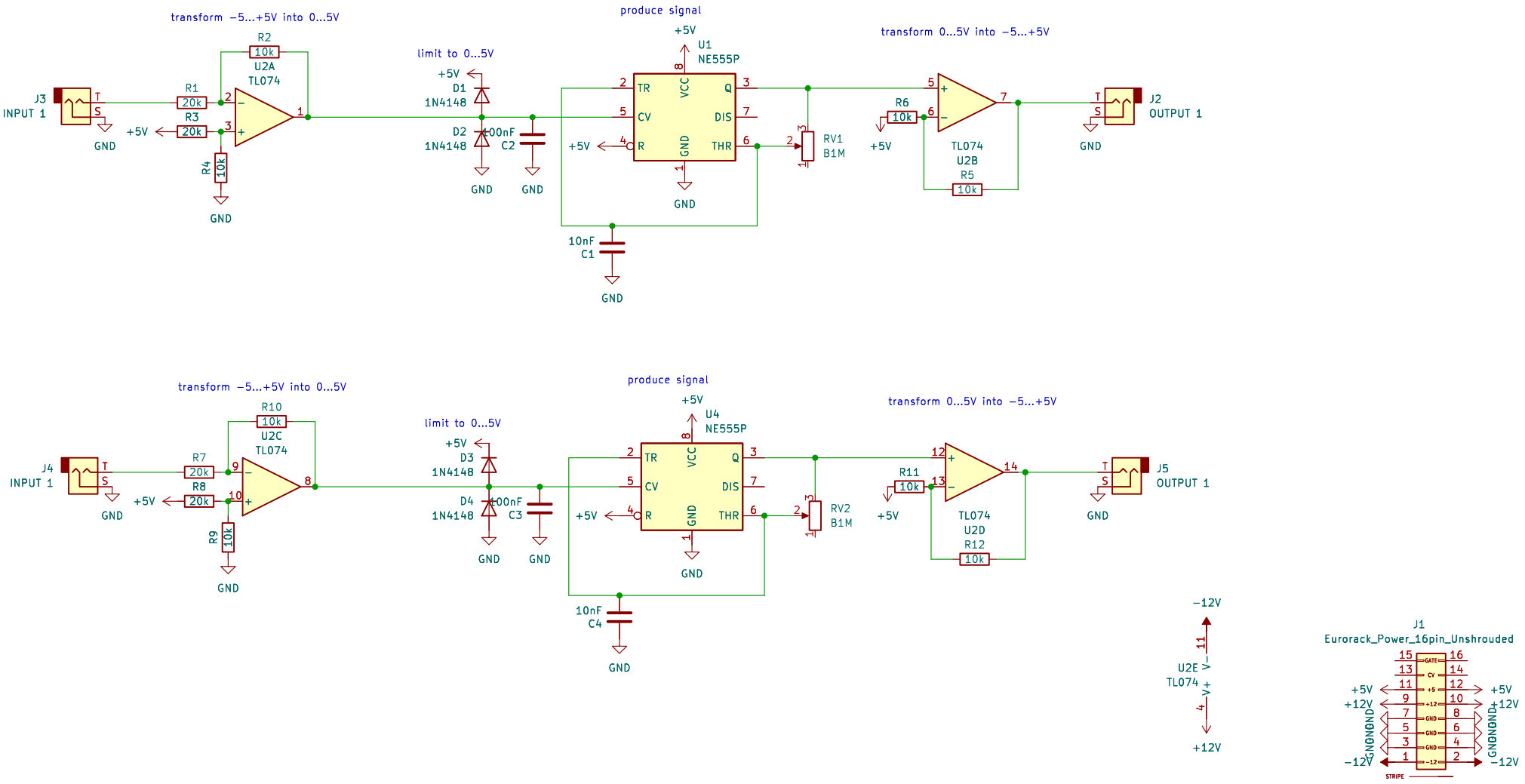


www.vanheusden.com

Sheet: /

File: magical555vco.kicad_sch

**Title: Magical555VCO**

| | | |
|---|---|---|
| Size: A4 | Date: 2023-10-28 | Rev: 0.2 |
| KiCad E.D.A. kicad 7.0.8-7.0.8~ubuntu23.04.1 | | Id: 1/1 |